RoHS

REV.	ECN. NO.	NAME	DATE
1	TER23-00042	DEBBIE	06/16/23"

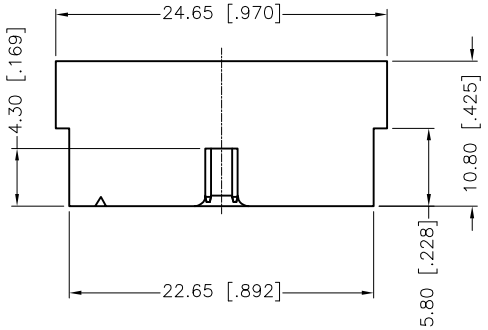

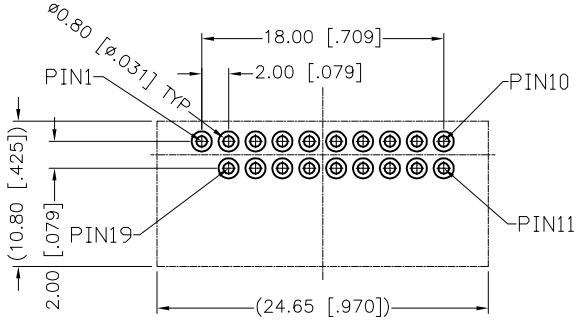

RECOMMENDED PCB LAYOUT (TOP VIEW)
T=1.60[.005] TOLERANCES:±0.05[.002]

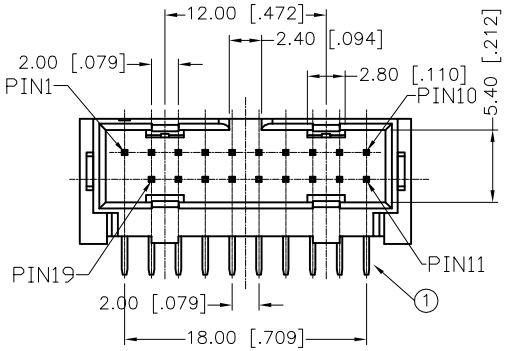

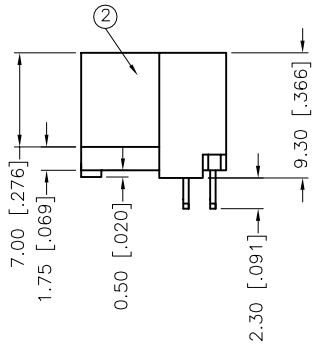

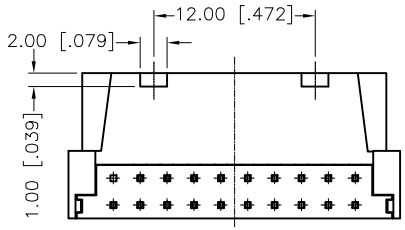

NOTES:

1. THE PRODUCT NUMBERS ARE ASSIGNED AS FOLLOWS:

1140−0 2 5−20 R−E

- PIN LENGTH E−2.30mm
- R−RIGHT ANGLE
- NO. OF CONTACT
- INSULATOR TYPE 5−PA6T, BLUE
- NO. OF ROW 2−DUAL ROW
- CONTACT PLATING 0−GOLD FLASH/TIN
- 2.00mm FEMALE HEADER

2. ELECTRICAL
. VOLTAGE RATING: 30V AC
. CURRENT RATING: 1.5 AMP.
. INSULATION RESISTANCE: 1000 MEGAOHMS MIN.
. DIELECTRIC WITHSTANDING VOLTAGE: 500 VAC
. CONTACT RESISTANCE: 30 MILLIOHMS MAX.

3. MECHANICAL:
. INSERTION FORCE: 35 N MAX.
. WITHDRAWAL FORCE: 15 N MIN.

4. ENVIRONMENTAL
. TEMPERATURE RANGE: −55°C TO +85°C.

USB3 ICC A Pin Assignment and Description

Pin No.	Signal	Description
1	Vbus	Power
2	IntA_P1_SSRX−	USB3 ICC Port1 SuperSpeed Rx−
3	IntA_P1_SSRX+	USB3 ICC Port1 SuperSpeed Rx+
4	GND	GND
5	IntA_P1_SSTX−	USB3 ICC Port1 SuperSpeed Tx−
6	IntA_P1_SSTX+	USB3 ICC Port1 SuperSpeed Tx+
7	GND	GND
8	IntA_P1_D−	USB3 ICC Port1 D− (USB2 Signal D−)
9	IntA_P1_D+	USB3 ICC Port1 D+ (USB2 Signal D+)
10	ID	Over Current Protection
11	IntA_P2_D+	USB3 ICC Port2 D+ (USB2 Signal D+)
12	IntA_P2_D−	USB3 ICC Port2 D− (USB2 Signal D−)
13	GND	GND
14	IntA_P2_SSTX+	USB3 ICC Port2 SuperSpeed Tx+
15	IntA_P2_SSTX−	USB3 ICC Port2 SuperSpeed Tx−
16	GND	GND
17	IntA_P2_SSRX+	USB3 ICC Port2 SuperSpeed Rx+
18	IntA_P2_SSRX−	USB3 ICC Port2 SuperSpeed Rx−
19	Vbus	Power

NO.	PART NAME	QTY	MATERIAL	REMARK
②	HOUSING	1	PA6T, UL94−V0	COLOR:BLUE
①	CONTACT	20	COPPER ALLOY	GOLD/TIN PLATED

TEKCON® ELECTRONICS

TITLE	USB 3.0 IDC 20PIN FEMALE R/A DIP TYPE
DWG.NO.	1140−025−20R−E
(A4)	
APPD.	
CHR.	
DR.	
UNIT:mm[inch]	
TOLERANCE UNLESS OTHERWISE SPECIFIED	
LINEAR	0.0 ±0.38 [.00 ±.015]
	0.00±0.25 [.000±.010]
ANGLES	± 3°
DWG.PATH: RD\55\1140X2520RE−1	SCALE 1:1 SHEET 1 OF 1 REV: 1