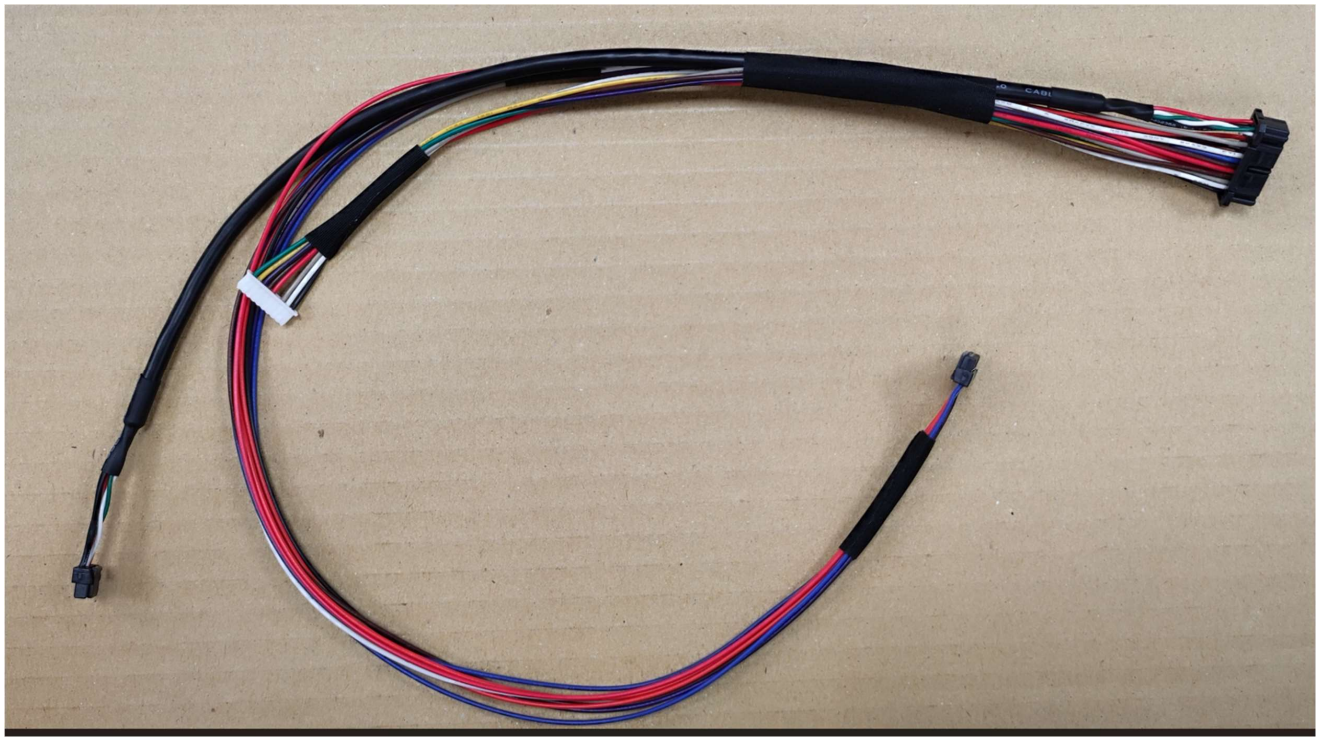

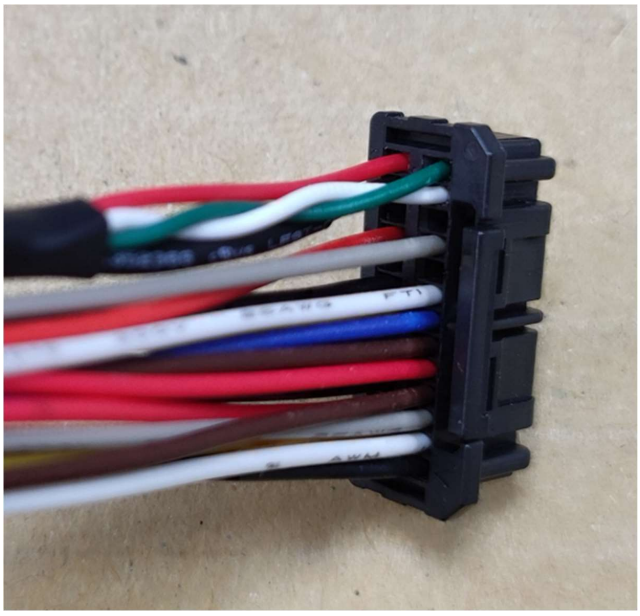



開發部
2023.06.21
發行
[illegible]科技開發股份有限公司

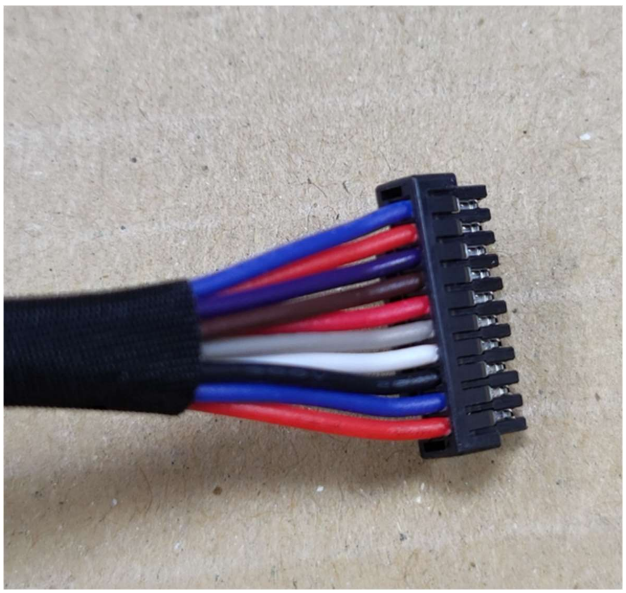

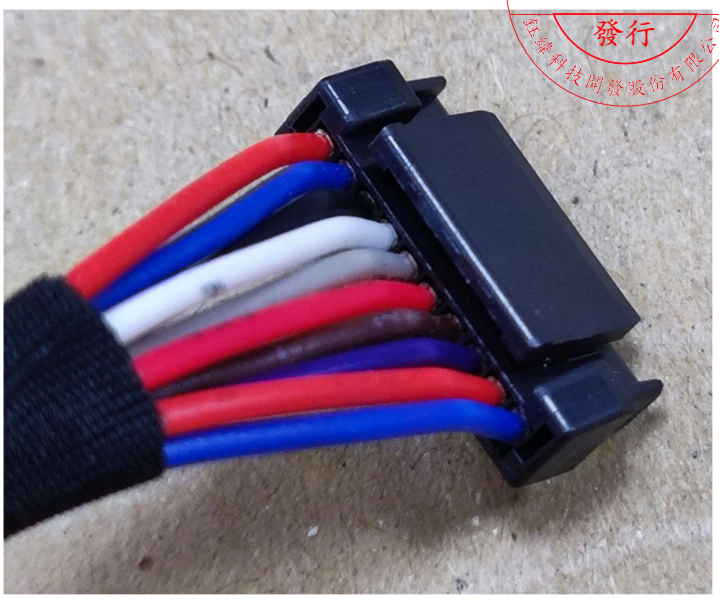

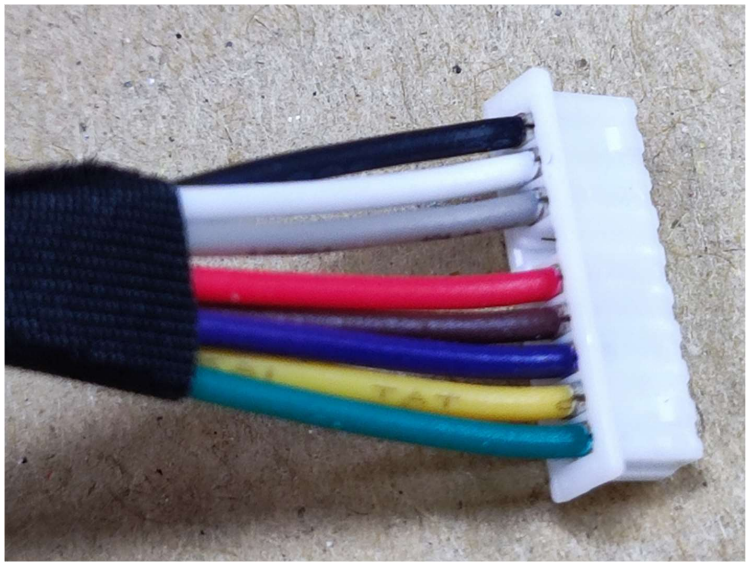

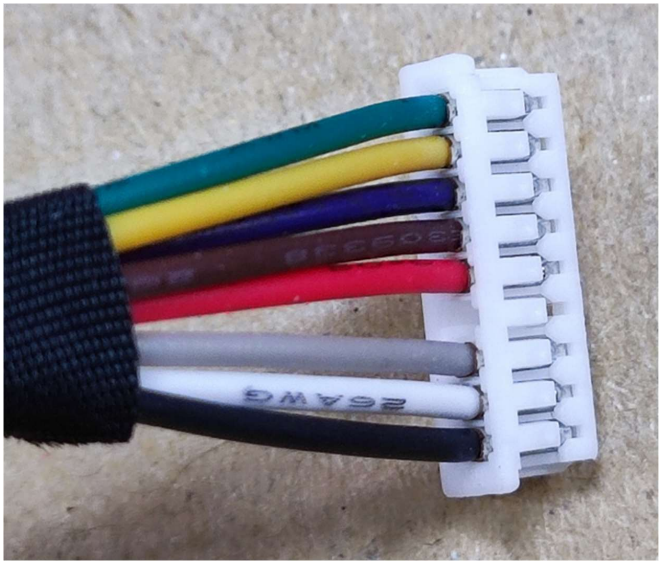

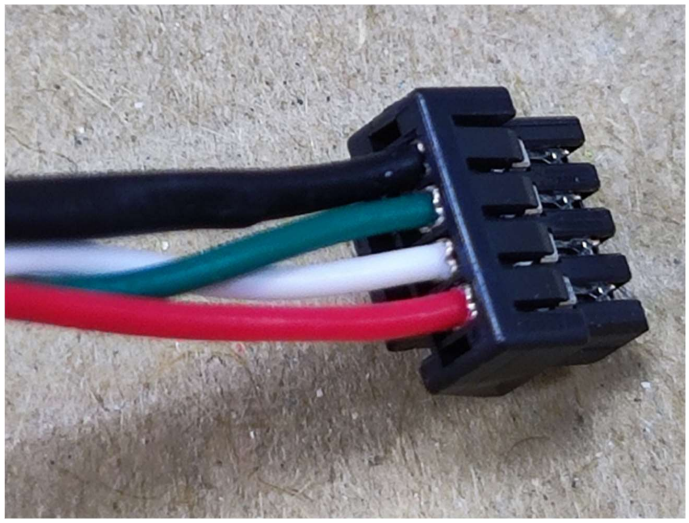

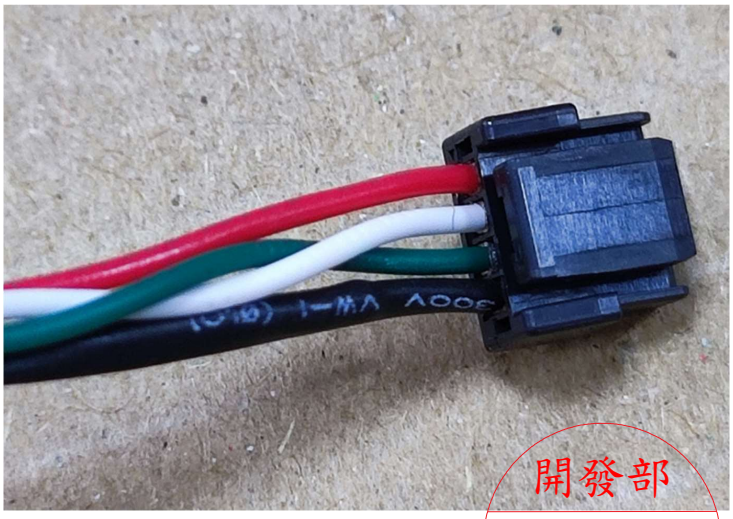

開發部
2023.06.21
發行
金緯科技開發股份有限公司

承　　認　　書

日期：2023.05.25

SPECIFICATION FOR APPROVAL

客戶名稱：
CUSTOMER：　鈺緯科技開發股份有限公司

料　　號：
PART NO：　**3KH00182010** (K1152)

品　　名：
ESCRIPTION：　**COMBO CABLE (GE 5856197)**

■	RoHS環保產品(無鉛)
□	一般產品(含鉛)

本承認書內容若貴公司確認無誤，
懇請於下方承認欄內簽章寄回。

Please confirm your acceptance of this approval sheet by return fax.

承　認　欄

CONFIRMATION SIGNATURE

開發部
2023.06.21
發行
鈺緯科技開發股份有限公司

穩惠電子工業股份限公司
WEN TE ELECTRONICS CO.,LTD.
新北市中和區中山路二段327巷19號5樓
電話： 02-2240-2482　　傳真： 02-2248-0401
E-mail:Jackie@wentek.com.tw
東莞穩德電子有限公司
DONGGUAN WEN DE ELECTRONICS CO.,LTD
廣東省東莞市虎門鎮新聯高科技工業區高科二路88號
電話： 86-769-85509740　傳真： 86-769-85504618
E-Mail：wd@dgwender.com.cn

核准	審核	品管	製作
沈燕凌 2023/5/25	林景杰 2023/5/25	溫雁琳 2023/5/25	呂宛樺 2023/5/25
APPROVAL	穩惠電子工業股份有限公司 TEL:22402482 工程確認章		

RoHS Compliant

DRAWING:
(成品圖)

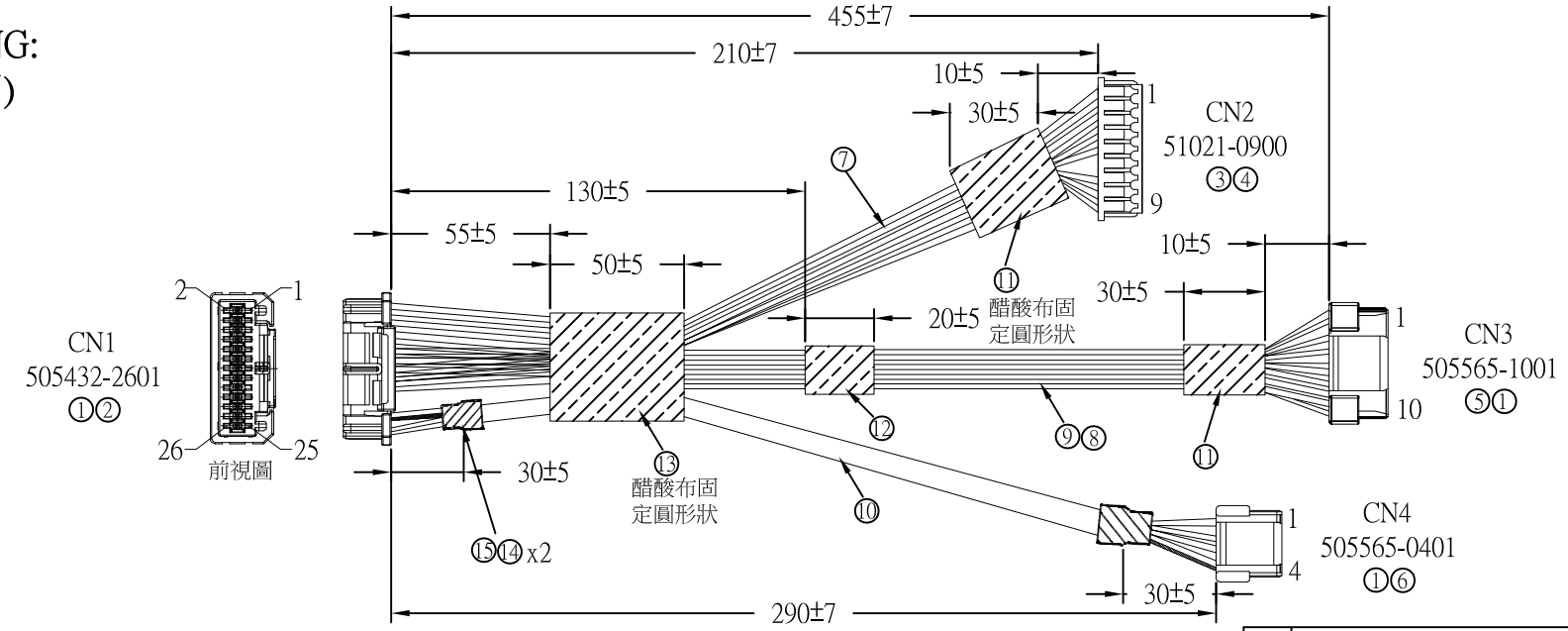

開發部
2023.06.21
發行
鈺緯科技開發股份有限公司

CN 1	COLOR	CN 2
1	黑	9
2	綠	1
3	白	8
4	黃	2
5	灰	7
6	紅	5
7	棕	4
8	紫	3

CN 1	COLOR	CN 3
9	紅	6
10	藍	10
11	棕	7
12	紫	8
13	藍	2
14	橙	9
15	白	4
16	黑	3
17~18	x	
19	灰	5
20	橙	1
21~22	x	

對絞

CN 1	COLOR	CN 4
26	紅	1
23	白	2
25	綠	3
24	黑+地	4

黑色線剝皮10mm与地線
一起熱縮套管打端子

Note:
包裝內袋 or 外箱貼 UL Lable

WIRING HARNESS
ISSUE NO.XXXXXX
FORM N XXX PCS
PRINTED IN U.S.A.

備註：
1、裁線長度：1.7 x 220 x 1.3
1.7 x 465 x 1.7
1.7 x 300 x 1.7
剝皮尺寸: 35 x 300 x 300
2、測試條件:
>測試電壓:300 V.DC.
>導通阻抗:2Ω(MAX).
>絕緣阻抗:20MΩ(MIN).

NO. 項次	Description 規格說明	Unit 單位	Q"TY 單用量	Remark 備注
15	黑色熱縮套管:φ1.0x35	PCS	2	領飛
14	黑色熱縮套管:φ4.0x20	PCS	2	領飛
13	黑色醋酸布:W=50	M	0.035	百圓
12	黑色醋酸布:W=20	M	0.035	百圓
11	黑色醋酸布:W=30	M	0.07	百圓
10	2725#28x1P+#28x2C+AEB OD:3.5 黑 L=300	PCS	1	慶龍
9	UL1061#26藍,橙 L=465	PCS	各2	眾達
8	UL1061#26紅,藍,棕,紫,白,黑,灰 L=465	PCS	各1	眾達
7	UL1061#26黑,綠,白,黃,灰,紅,棕,紫 L=220	PCS	各1	眾達
6	HSG:505565-0401	PCS	1	molex
5	HSG:505565-1001	PCS	1	molex
4	HSG:51021-0900	PCS	1	molex
3	TER:50079-8000	PCS	8	molex
2	HSG:505432-2601	PCS	1	molex
1	TER:505431-1000	PCS	36	molex

No. 項次	Date 日期	Design Change Record 變更記錄	Confirm 確認

Approval 檢查規范			
Approve 核准	Check 复核	Confirm 確認	Draw By 繪圖
沈燕凌 05/25	林景杰 05/25	林景杰 05/25	陳熙緯 05/25

ISSUE NO. 版次	REV. A	Customer 客戶名稱	鈺緯科技
	Unit : mm 單位	Drawing No. 品名	
A	Scale : 比例	PART NO. 料號	3KH00182010 (K7152)
	2023.04.10	DRAW NO. 繪圖編號	3KH00182000085

WEN DE ELECTRONICS CO.,LTD.

Q-008B

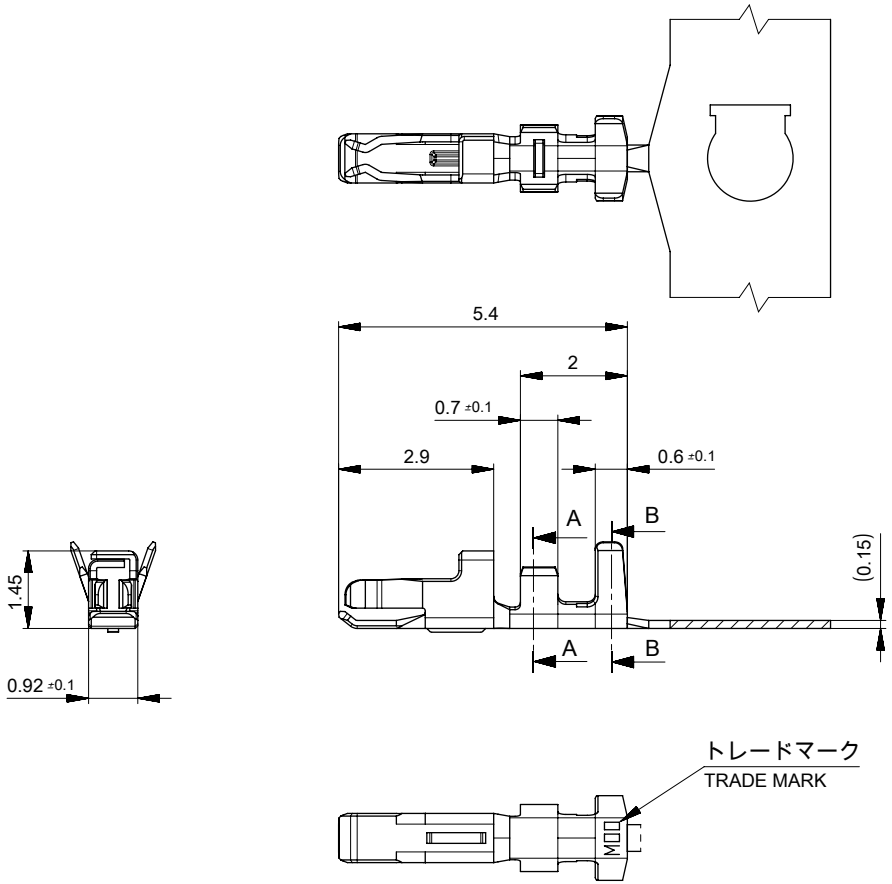

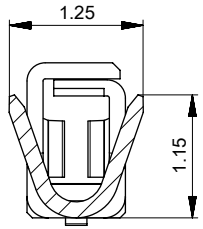

SECTION A-A

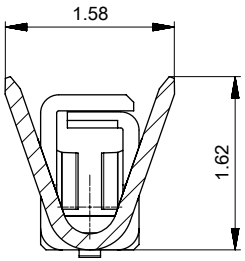

SECTION B-B

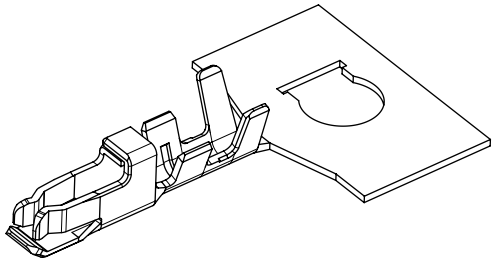

注記 NOTE

1. 材料及び仕上げ（めっき仕様）：TABLE1参照
   MATERIAL AND FINISHED(PLATING SPECIFICATION) : SEE TABLE 1
2. 適合ハウジング：505565****, 505432****, 204532****
   APPLICABLE HOUSING :505565****, 505432****, 204532****
3. 本製品は錫めっき品である。金めっき品は5054311100-SD PSD 000をご参照ください。
   THIS PRODUCT IS A TIN PLATING. PLEASE REFER TO 5054311100-SD PSD 000 FOR GOLD PLATING.

開發部
2023.06.21
發行
鈺緯科技開發股份有限公司

1 TABLE 1

材質及び仕上げ（めっき仕様） MATERIAL AND FINISHED (PLATING SPECIFICATION)
銅合金 COPPER ALLOY
錫めっき：0.7MICROMETER MINIMUM PRE-TIN PLATING (HEAT TREATED MATTE TIN)
ニッケルめっき(下地) : 0.5 MICROMETER MINIMUM NICKEL (UNDER PLATING)

DOCUMENT STATUS	P1	RELEASE DATE	2019/08/20 06:36:19

Φ0.78-1.02mm	AWG#26~30 MM^2 : 0.049~0.136	リール REEL	連鎖状 CHAIN	5054311000
絶縁被覆外径 INSULATION DIAMETER	適用電線範囲 WIRE RANGE	梱包形態 PACKAGING	端子形状 FORM	発注番号 ORDER NO.

THIS DRAWING CONTAINS INFORMATION THAT IS PROPRIETARY TO MOLEX ELECTRONIC TECHNOLOGIES, LLC AND SHOULD NOT BE USED WITHOUT WRITTEN PERMISSION

DIMENSION UNITS	SCALE
mm	NTS

GENERAL TOLERANCES (UNLESS SPECIFIED)

ANGULAR TOL	±	3.0°
4 PLACES	±	0.2
3 PLACES	±	0.2
2 PLACES	±	0.2
1 PLACE	±	0.2
0 PLACES	±	0.2

DRAFT WHERE APPLICABLE MUST REMAIN WITHIN DIMENSIONS

CURRENT REV DESC: REVISED

EC NO: 621849
DRWN: TAKAIKE 2019/08/01
CHK'D: SAKIYAMA 2019/08/20
APPR: AIDA 2019/08/20

INITIAL REVISION:
DRWN: RWATANABE01 2017/09/14
APPR: TKANEKO 2017/09/26

THIRD ANGLE PROJECTION | DRAWING: A3-SIZE | SERIES: 505431

molex

MICRO-LOCK PLUS 1.25
RECEPTACLE CRIMP TERMINAL

PRODUCT CUSTOMER DRAWING

DOCUMENT NUMBER	DOC TYPE	DOC PART	REVISION
5054311000-SD	PSD	000	D

MATERIAL NUMBER	CUSTOMER	SHEET NUMBER
SEE CHART	GENERAL	1 OF 2

FORMAT: mastertb-mod-A3
REVISION: H
DATE: 2018/01/18

適用製品及び各種仕様書
APPLICABLE PRODUCTS AND VARIOUS SPECIFICATIONS

開發部
2023.06.21
發行
鈺緯科技開發股份有限公司



梱包仕様書 PACKING SPECIFICATION	5054319200 PS 200

列数 NUMBER OF ROWS		SINGLE			
ローハロゲン対応 LOW HALOGEN COMPLIANT		NOT COMPLIANT		COMPLIANT	
適応ハウジング シリーズ番号 APPLY HOUSING SERIES NUMBER.		505565		204532	
適応嵌合相手 MATE WITH	嵌合タイプ MATING TYPE	VERTICAL	RIGHT ANGLE	VERTICAL	VERTICAL (FOR POTTING)
	シリーズ番号 SERIES NUMBER	505568	505567	204530	205957
製品仕様書 PRODUCT SPECIFICATION		5055650000 PS 000		2045320000-PS PS 000	2045320001-PS PS 000
取扱説明書 APPLICATION SPECIFICATION		AS-505565-001 (JAPANESE/ENGLISH)			

列数 NUMBER OF ROWS		DUAL		
ローハロゲン対応 LOW HALOGEN COMPLIANT		NOT COMPLIANT		COMPLIANT
適応ハウジング シリーズ番号 APPLY HOUSING SERIES NUMBER.		505432		204523
適応嵌合相手 MATE WITH	嵌合タイプ MATING TYPE	VERTICAL	RIGHT ANGLE	RIGHT ANGLE
	シリーズ番号 SERIES NUMBER	505433	505448	204519
製品仕様書 PRODUCT SPECIFICATION		5054320000 PS 002		2045230000-PS PS 000
取扱説明書 APPLICATION SPECIFICATION		AS-505432-001 (JAPANESE/ENGLISH)		

製品嵌合図は各"適応嵌合相手"図面参照のこと
MATING VIEW : REFER TO EACH "MATE WITH" PART DRAWING.

THIS DRAWING CONTAINS INFORMATION THAT IS PROPRIETARY TO MOLEX ELECTRONIC TECHNOLOGIES, LLC AND SHOULD NOT BE USED WITHOUT WRITTEN PERMISSION

DIMENSION UNITS: mm	SCALE: NTS	CURRENT REV DESC: REVISED	molex
GENERAL TOLERANCES (UNLESS SPECIFIED)		EC NO: 621849	MICRO-LOCK PLUS 1.25 RECEPTACLE CRIMP TERMINAL
ANGULAR TOL ± 3.0°		DRWN: TAKAIKE 2019/08/01	
4 PLACES ± 0.2		CHK'D: SAKIYAMA 2019/08/20	
3 PLACES ± 0.2		APPR: AIDA 2019/08/20	PRODUCT CUSTOMER DRAWING
2 PLACES ± 0.2		INITIAL REVISION:	DOCUMENT NUMBER: 5054311000-SD; DOC TYPE: PSD; DOC PART: 000; REVISION: D
1 PLACE ± 0.2		DRWN: RWATANABE01 2017/09/14	
0 PLACES ± 0.2		APPR: TKANEKO 2017/09/26	
DRAFT WHERE APPLICABLE MUST REMAIN WITHIN DIMENSIONS	THIRD ANGLE PROJECTION	DRAWING: A3-SIZE; SERIES: 505431	MATERIAL NUMBER; CUSTOMER: GENERAL; SHEET NUMBER: 2 OF 2

DOCUMENT STATUS	P1	RELEASE DATE	2019/08/20 06:36:19

FORMAT: master-tb-mod-A3
REVISION: H
DATE: 2018/01/

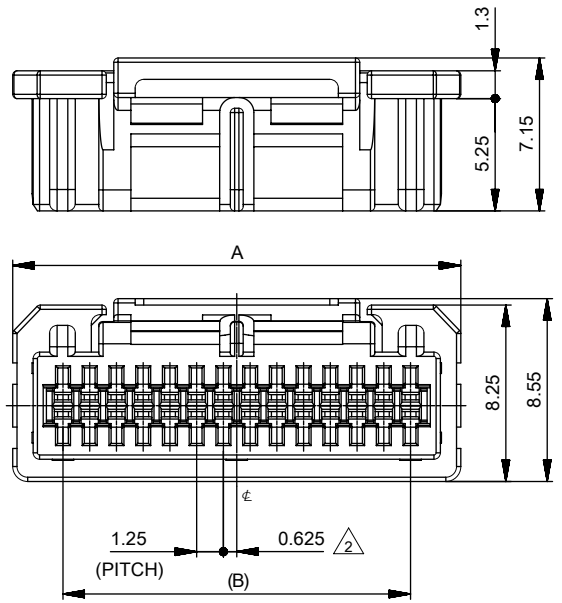

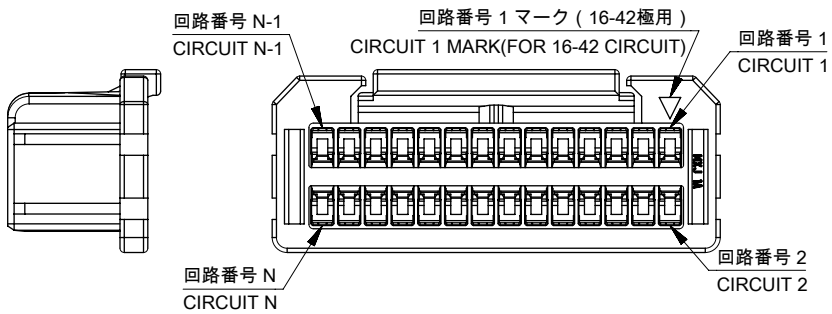

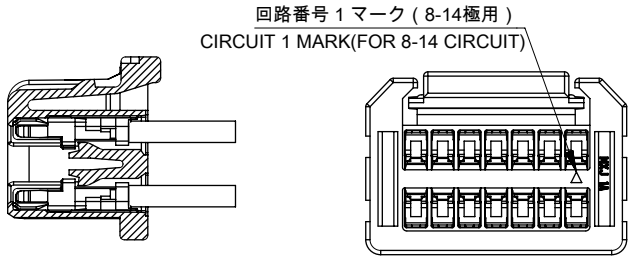

ターミナル装着図
TERMINAL ASSEMBLY DRAWING

注記 NOTES

1. 材料 : TABLE 1参照
   MATERIAL : SEE TABLE 1.
2. 偶数極に適用。
   APPLY FOR EVEN CIRCUIT.
3. 製品仕様書、アプリケーション仕様書、適用嵌合相手、適用ターミナルはSHEET 3をご参照ください。
   PLEASE REFER TO SHEET 3 FOR PRODUCT SPECIFICATION, APPLICATION SPECIFICATION.
4. 製品番号 MATERIAL NO.

505432**0*

極数
CIRCUIT SIZE

番号 NO.	ハウジングカラー HOUSING COLOR
0	ナチュラル (ベージュ) NATURAL(BEIGE)
1	黒 BLACK
2	赤 RED
4	青 BLUE
6	緑 GREEN

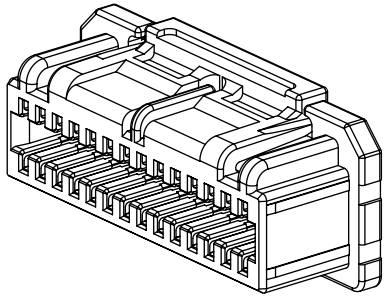

B	A	極数 CIRCUIT SIZE
25	29.7	42
23.75	28.45	40
22.5	27.2	38
21.25	25.95	36
20	24.7	34
18.75	23.45	32
17.5	22.2	30
16.25	20.95	28
15	19.7	26
13.75	18.45	24
12.5	17.2	22
11.25	15.95	20
10	14.7	18
8.75	13.45	16
7.5	12.2	14
6.25	10.95	12
5	9.7	10
3.75	8.45	8

開發部
2023.06.21
發行
鈺鐘科技開發股份有限公司

1 TABLE 1

部品 PART	材質 MATERIAL
ハウジング HOUSING	PBT UL94V-0 色 : SHEET3参照 PBT UL94V-0 COLOR:SEE SHEET 3.

DOCUMENT STATUS	P1	RELEASE DATE	2019/07/31	10:52:35

THIS DRAWING CONTAINS INFORMATION THAT IS PROPRIETARY TO MOLEX ELECTRONIC TECHNOLOGIES, LLC AND SHOULD NOT BE USED WITHOUT WRITTEN PERMISSION

DIMENSION UNITS	SCALE
mm	NTS

GENERAL TOLERANCES (UNLESS SPECIFIED)

ANGULAR TOL	±	3.0°
4 PLACES	±	0.2
3 PLACES	±	0.2
2 PLACES	±	0.2
1 PLACE	±	0.2
0 PLACES	±	0.2

DRAFT WHERE APPLICABLE MUST REMAIN WITHIN DIMENSIONS

CURRENT REV DESC: REVISED

EC NO: 620885
DRWN: TAKAIKE 2019/07/17
CHK'D: SAKIYAMA 2019/07/19
APPR: KOMURAKAMI 2019/07/31

INITIAL REVISION:
DRWN: TAKAIKE 2017/02/10
APPR: TKANEKO 2017/04/03

THIRD ANGLE PROJECTION | DRAWING A3-SIZE | SERIES 505432

molex

MICRO-LOCK PLUS 1.25 W/B
DUAL ROW RECEPTACLE HOUSING

PRODUCT CUSTOMER DRAWING

DOCUMENT NUMBER	DOC TYPE	DOC PART	REVISION
5054320000	PSD	000	D

MATERIAL NUMBER	CUSTOMER	SHEET NUMBER
SEE SHEET 3	GENERAL	1 OF 3

FORMAT: master-tb-end-A3
REVISION: H
DATE: 2018/01/

製品形状
PRODUCT SHAPE

開發部
2023.06.21
發行
鈺縫科技開發股份有限公司

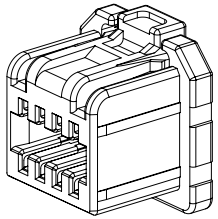

8-14極
8-14 CIRCUIT

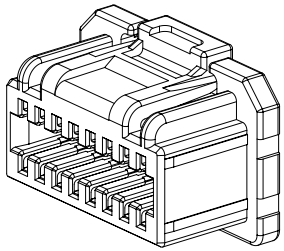

16-24極
16-24 CIRCUIT

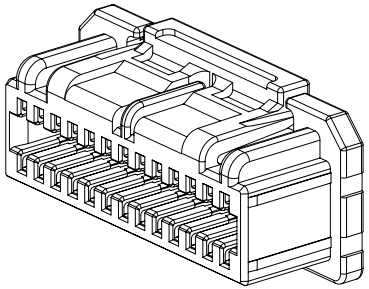

26-32極
26-32 CIRCUIT

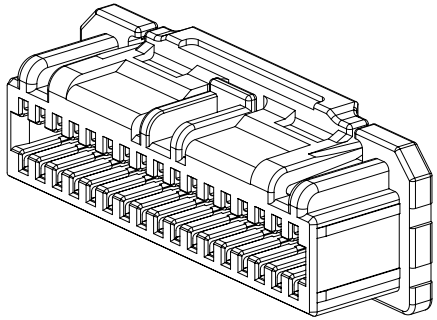

34-40極
34-40 CIRCUIT

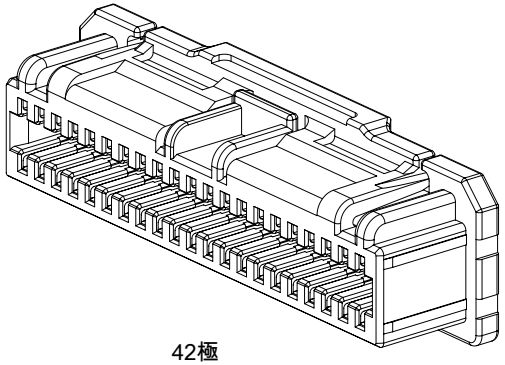

42極
42 CIRCUIT

THIS DRAWING CONTAINS INFORMATION THAT IS PROPRIETARY TO MOLEX ELECTRONIC TECHNOLOGIES, LLC AND SHOULD NOT BE USED WITHOUT WRITTEN PERMISSION

DIMENSION UNITS	SCALE
mm	NTS

GENERAL TOLERANCES (UNLESS SPECIFIED)

ANGULAR TOL	±	3.0°
4 PLACES	±	0.2
3 PLACES	±	0.2
2 PLACES	±	0.2
1 PLACE	±	0.2
0 PLACES	±	0.2

DRAFT WHERE APPLICABLE MUST REMAIN WITHIN DIMENSIONS

CURRENT REV DESC: REVISED

EC NO: 620885
DRWN: TAKAIKE 2019/07/17
CHK'D: SAKIYAMA 2019/07/19
APPR: KOMURAKAMI 2019/07/31

INITIAL REVISION:
DRWN: TAKAIKE 2017/02/10
APPR: TKANEKO 2017/04/03

THIRD ANGLE PROJECTION | DRAWING: A3-SIZE | SERIES: 505432

molex

MICRO-LOCK PLUS 1.25 W/B
DUAL ROW RECEPTACLE HOUSING

PRODUCT CUSTOMER DRAWING

DOCUMENT NUMBER	DOC TYPE	DOC PART	REVISION
5054320000	PSD	000	D

MATERIAL NUMBER	CUSTOMER	SHEET NUMBER
SEE SHEET 3	GENERAL	2 OF 3

DOCUMENT STATUS	P1	RELEASE DATE	2019/07/31	10:52:35

FORMAT: mastergrid-A3
REVISION: H
DATE: 2018/01/16

3 適用製品及び各種仕様書 APPLICABLE PRODUCTS AND VARIOUS SPECIFICATIONS

梱包仕様書 PACKAGING SPECIFICATION	製品番号 PART NUMBER	仕様書番号 SPECIFICATION NUMBER
	505432**0*	5054329200 PS 200

適用端子 APPLICABLE TERMINAL	製品番号 PART NUMBER	めっきタイプ PLATING TYPE	電線サイズ WIRE SIZE(AWG)
	5054311000	TIN	#26-30

適用嵌合相手 MATE WITH	TIN PLATING	
	VERTICAL	RIGHT ANGLE
シリーズ番号 SERIES NO.	505433****	505448**7*
製品仕様書 PRODUCT SPECIFICATION	5054320000 PS 002	
アプリケーション仕様書 APPLICATION SPECIFICATION	AS-505432-001 (JAPANESE/ENGLISH)	

開發部
2023.06.21
發行
鈺鐘科技開發股份有限公司

4 505432**0* 製品番号一覧 PRODUCT NUMBER LIST

緑 GREEN	青 BLUE	赤 RED	黒 BLACK	ナチュラル（ベージュ） NATURAL(BEIGE)	HOUSING COLOR
5054324206	5054324204	5054324202	5054324201	5054324200	42
5054324006	5054324004	5054324002	5054324001	5054324000	40
5054323806	5054323804	5054323802	5054323801	5054323800	38
5054323606	5054323604	5054323602	5054323601	5054323600	36
5054323406	5054323404	5054323402	5054323401	5054323400	34
5054323206	5054323204	5054323202	5054323201	5054323200	32
5054323006	5054323004	5054323002	5054323001	5054323000	30
5054322806	5054322804	5054322802	5054322801	5054322800	28
5054322606	5054322604	5054322602	5054322601	5054322600	26
5054322406	5054322404	5054322402	5054322401	5054322400	24
5054322206	5054322204	5054322202	5054322201	5054322200	22
5054322006	5054322004	5054322002	5054322001	5054322000	20
5054321806	5054321804	5054321802	5054321801	5054321800	18
5054321606	5054321604	5054321602	5054321601	5054321600	16
5054321406	5054321404	5054321402	5054321401	5054321400	14
5054321206	5054321204	5054321202	5054321201	5054321200	12
5054321006	5054321004	5054321002	5054321001	5054321000	10
5054320806	5054320804	5054320802	5054320801	5054320800	8
発注番号　ORDER NO					極数 CIRCUIT SIZE
梱包形態：ポリ袋 PACKAGING : POLYBAG PACKAGE					

THIS DRAWING CONTAINS INFORMATION THAT IS PROPRIETARY TO MOLEX ELECTRONIC TECHNOLOGIES, LLC AND SHOULD NOT BE USED WITHOUT WRITTEN PERMISSION

DIMENSION UNITS	SCALE	CURRENT REV DESC: REVISED	molex
mm	NTS		

GENERAL TOLERANCES (UNLESS SPECIFIED)

ANGULAR TOL	±	3.0°
4 PLACES	±	0.2
3 PLACES	±	0.2
2 PLACES	±	0.2
1 PLACE	±	0.2
0 PLACES	±	0.2

DRAFT WHERE APPLICABLE MUST REMAIN WITHIN DIMENSIONS

EC NO: 620885
DRWN: TAKAIKE 2019/07/17
CHK'D: SAKIYAMA 2019/07/19
APPR: KOMURAKAMI 2019/07/31

INITIAL REVISION:
DRWN: TAKAIKE 2017/02/10
APPR: TKANEKO 2017/04/03

MICRO-LOCK PLUS 1.25 W/B
DUAL ROW RECEPTACLE HOUSING

PRODUCT CUSTOMER DRAWING

DOCUMENT NUMBER	DOC TYPE	DOC PART	REVISION
5054320000	PSD	000	D

THIRD ANGLE PROJECTION	DRAWING	SERIES	MATERIAL NUMBER	CUSTOMER	SHEET NUMBER
	A3-SIZE	505432	SEE SHEET 3	GENERAL	3 OF 3

DOCUMENT STATUS	P1	RELEASE DATE	2019/07/31	10:52:35

FORMAT: master-tb-mod-A3
REVISION: H
DATE: 2018/01/

FEATURES AND SPECIFICATIONS

Features and Benefits

- Locking tang for secure housing retention

Reference Information

Packaging: Reel or bag
Use With: 51021
Mates With: 51025 and 50133
Designed In: Millimeters

Electrical

Voltage: 125V
Current: 1.0A
32 AWG—0.8A
Contact Resistance: 20mΩ max.
Dielectric Withstanding Voltage: 250V AC/1 min.
Insulation Resistance: 100 MΩ min.

Physical

Contact: Phosphor Bronze
Plating: Tin
Wire Range:
26 to 28 AWG—50079
28 to 32 AWG—50058
Insulation Range: 1.00mm dia. max.
Strip Length: 1.40 to 1.90mm

1.25mm (.049") Pitch Wire-to-Board and Wire-to-Wire Crimp Terminal

50079/50058

Female

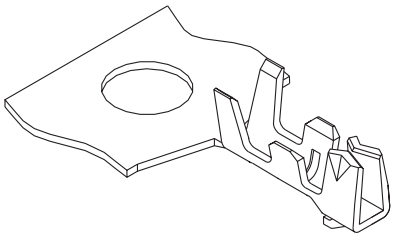

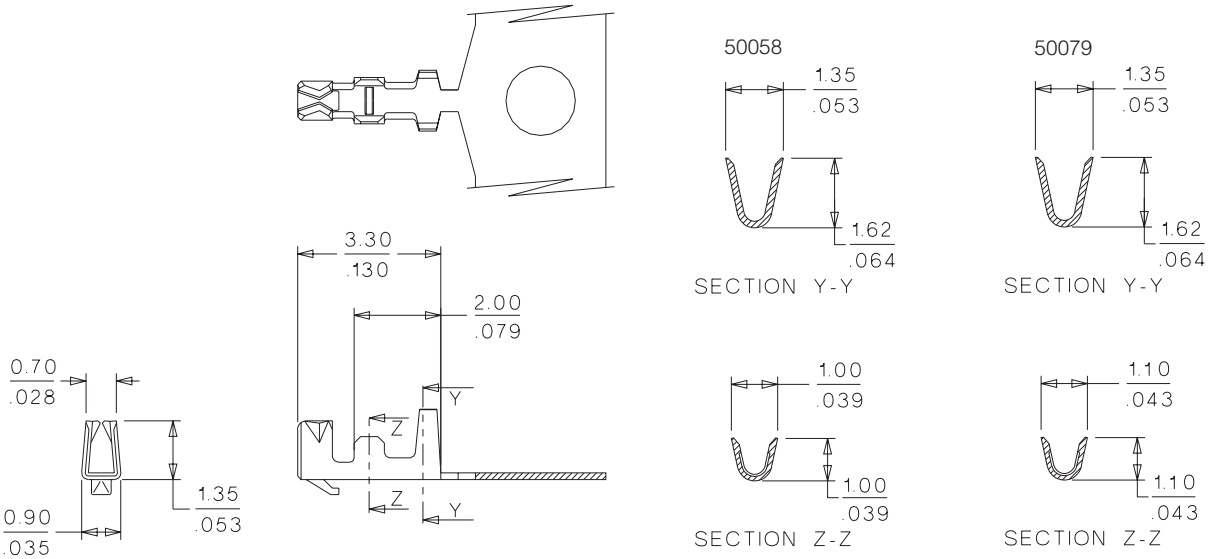

ORDERING INFORMATION

Order No.	Wire Range AWG	Terminal
50079-8000	26 - 28	Reel
50058-8000	28 - 32	
50079-8100	26 - 28	Bag
50058-8100	28 - 32	

開發部
2023. 06. 21
發行
鈺鏵科技開發股份有限公司

DWG. NO. SD-51021-**0*

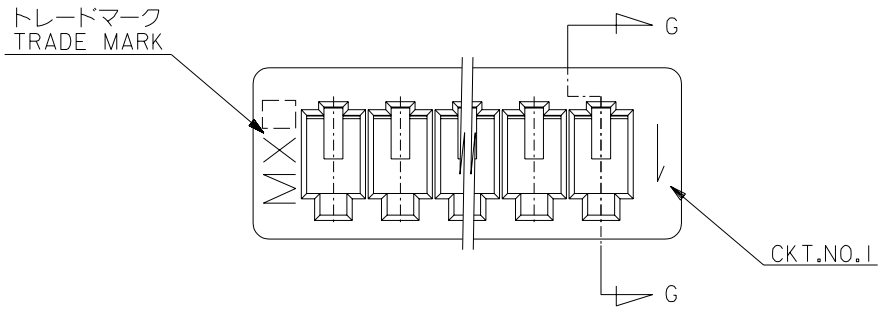

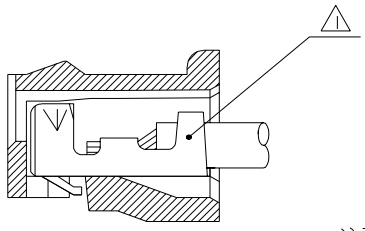

SECT. G-G

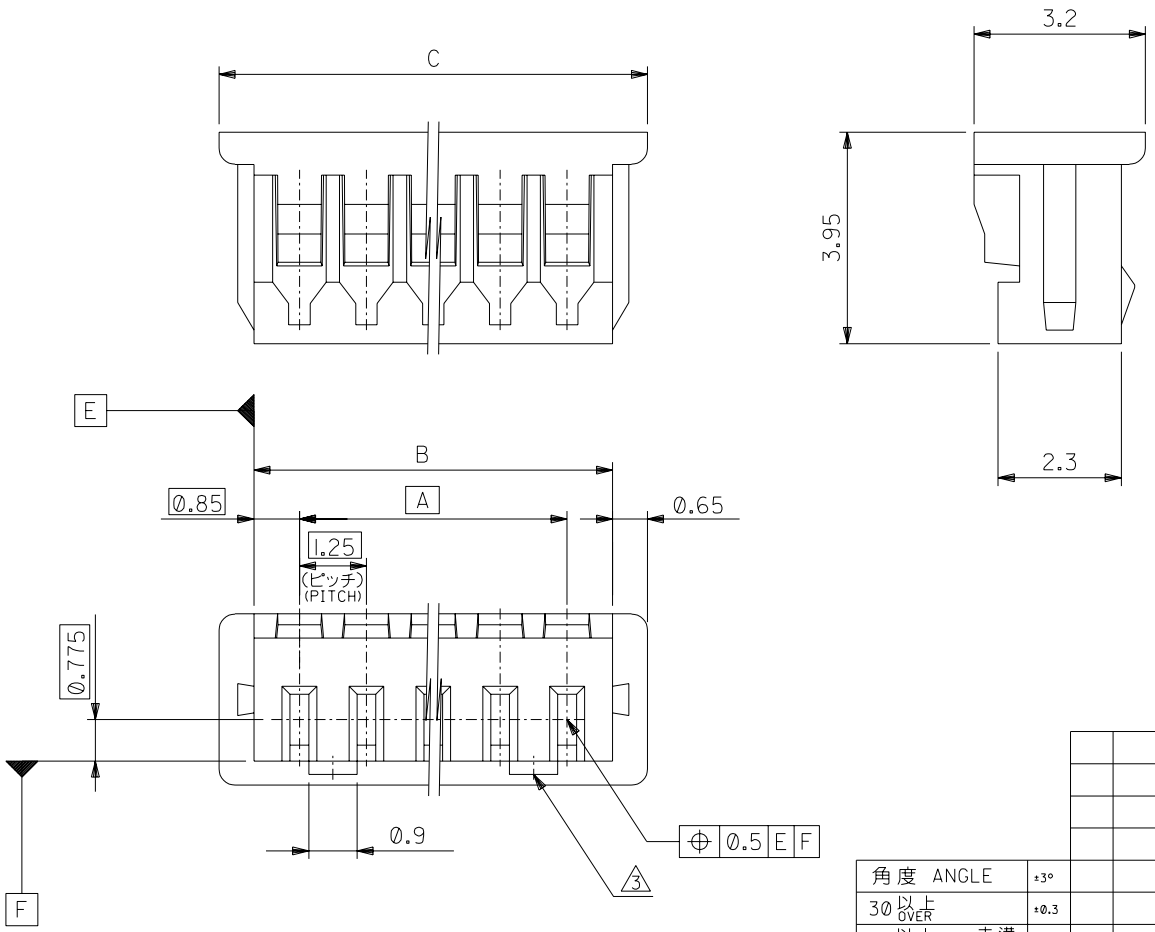

開發部
2023.06.21
發行
鈺鐘科技開發股份有限公司

注記 NOTES

1 適合ターミナル：50058, 50079 シリーズ
APPLICABLE TERMINAL : 50058, 50079 SERIES

2 嵌合相手： 53047, 53048, 53261, 53398 シリーズ
MATE WITH : 53047, 53048, 53261, 53398 SERIES

3 ロックは，2，3極は1ヶ，4極以上は2ヶとする。
LOCKING WINDOW : ONE PLACE FOR 2 & 3 CKT.
AND TWO PLACES FOR MORE THAN 3 CKT.

4 ウエハーの色 COLOR OF WAFER
ENG. NO. の下1桁に対応する。
CORRESPONS TO LAST DIGIT OF ENG.NO.
黒 BLACK ; 51021-**01

C	B	A	ENG.NO. 4	極数 CKTS.
20.5	19.2	17.5	51021-150*	15
19.25	17.95	16.25	-140*	14
18	16.7	15	-130*	13
16.75	15.45	13.75	-120*	12
15.5	14.2	12.5	-110*	11
14.25	12.95	11.25	-100*	10
13	11.7	10	-090*	9
11.75	10.45	8.75	-080*	8
10.5	9.2	7.5	-070*	7
9.25	7.95	6.25	-060*	6
8	6.7	5	-050*	5
6.75	5.45	3.75	-040*	4
5.5	4.2	2.5	-030*	3
4.25	2.95	1.25	51021-020*	2

角度 ANGLE	±3°
30 以上 OVER	±0.3
10 以上 OVER 30 未満 UNDER	±0.25
10 未満 UNDER	±0.2
一般公差 GENERAL TOLERANCES	

記号 LTR	変更内容 REVISION RECORD	DR. / CHK.	日付 DATE
0	新規作成 RELEASED (J50396)	T.A / H.H	'95/5/31

材料 MATERIAL: PBTP UL94V-0
仕上げ FINISH
適用電線範囲 WIRE RANGE
被覆外径 INS. RANGE

DRAWN BY '95/5/31 T.ASAKAWA
CHK'D BY '95/5/31 Y.M H.HIRAMOTO
APP'D BY '95/5/31 M.FUKUSHIMA
尺度 SCALE 10 : 1

molex MOLEX-JAPAN CO.,LTD. 日本モレックス株式会社

REVISE ONLY ON CAD SYSTEM

TITLE 名称
1.25 WIRE TO BOARD CONN.
RECEPTACLE HOUSING
(DYED COLOR)

DWG. NO. SD-51021-**0*
REV 0

51021.S12

:MM DIMENSIONS IN METRIC DO NOT SCALE DRAWING

THIS DRAWING CONTAINS INFORMATION THAT IS PROPRIETARY TO MOLEX(JAPAN) AND SHOULD NOT BE USED WITHOUT WRITTEN PERMISSION
本図面は日本モレックス（株）の所有する情報を含むもので 当社の許可なく複製を禁止する。

EN-01C(032)MXJ-32

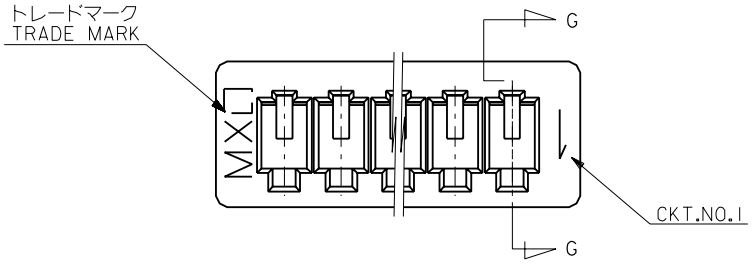

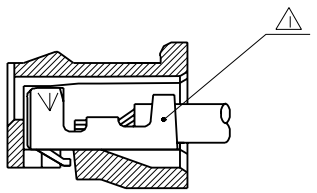

SECT. G-G

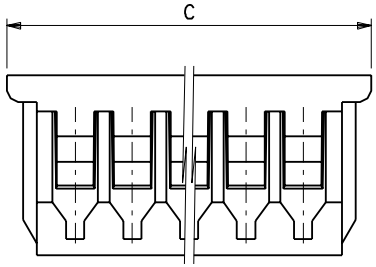

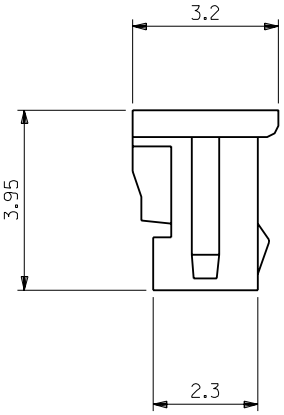

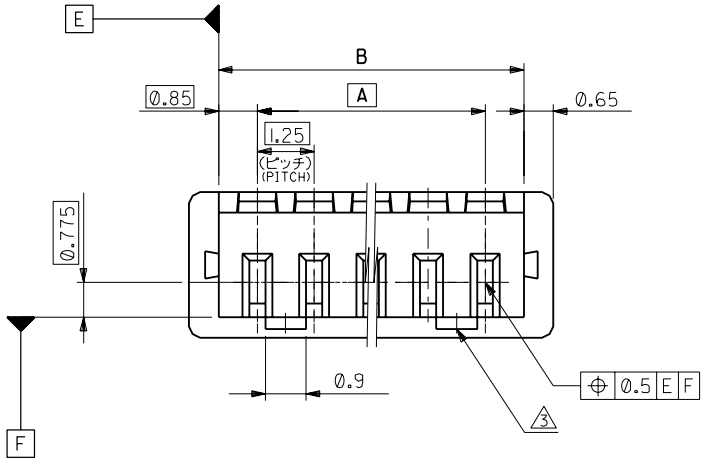

注記 NOTES

⚠1 適合ターミナル：50058, 50079 シリーズ
APPLICABLE TERMINAL : 50058, 50079 SERIES

2 嵌合相手： 53047, 53048, 53261, 53398 シリーズ
MATE WITH : 53047, 53048, 53261, 53398 SERIES

⚠3 ロックは、2、3極は1ヶ、4極以上は2ヶとする。
LOCKING WINDOW : ONE PLACE FOR 2 & 3 CKT.
AND TWO PLACES FOR MORE THAN 3 CKT.

C	B	A	ENG.NO.	極数 CKTS.
20.5	19.2	17.5	51021-1500	15
19.25	17.95	16.25	-1400	14
18	16.7	15	-1300	13
16.75	15.45	13.75	-1200	12
15.5	14.2	12.5	-1100	11
14.25	12.95	11.25	-1000	10
13	11.7	10	-0900	9
11.75	10.45	8.75	-0800	8
10.5	9.2	7.5	-0700	7
9.25	7.95	6.25	-0600	6
8	6.7	5	-0500	5
6.75	5.45	3.75	-0400	4
5.5	4.2	2.5	-0300	3
4.25	2.95	1.25	51021-0200	2

開發部
2023.06.21
發行
鈺緯科技開發股份有限公司

DWG. NO. SD-51021-**00

:MM DIMENSIONS IN METRIC DO NOT SCALE DRAWING

角度 ANGLE	±3°
30 以上 OVER	±0.3
10 以上 OVER 30 未満 UNDER	±0.25
10 未満 UNDER	±0.2
一般公差 GENERAL TOLERANCES	

記号 LTR	変更内容 REVISION RECORD	DR. CHK.	日付 DATE
D	変更及び再作図 REVISED&REDRAWN (J30522)	K.T H.H	'93/6/1

材料 MATERIAL: PBTP UL94V-0
仕上げ FINISH:
適用電線範囲 WIRE RANGE:
被覆外径 INS. RANGE:

DRAWN BY '93/6/1 K.TOJO
CHK'D BY '93/6/1 H.HIRAMOTO
APP'D BY '93/6/1 M.FUKUSHIMA
尺度 SCALE 10 : 1

MOLEX-JAPAN CO.,LTD. 日本モレックス株式会社

REVISE ONLY ON CAD SYSTEM

TITLE 名称
1.25 WIRE TO BOARD CONN.
RECEPTACLE HOUSING

DWG. NO. SD-51021-**00
REV D

THIS DRAWING CONTAINS INFORMATION THAT IS PROPRIETARY TO MOLEX(JAPAN) AND SHOULD NOT BE USED WITHOUT WRITTEN PERMISSION
本図面は日本モレックス（株）の所有する情報を含むもので当社の許可なく複製を禁止する。

EN-01C(032)MXJ-32

5102.1S11

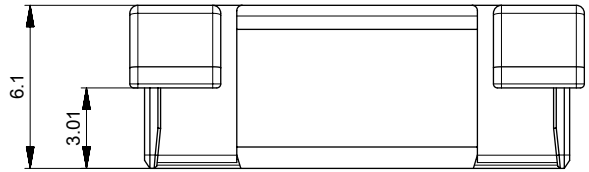

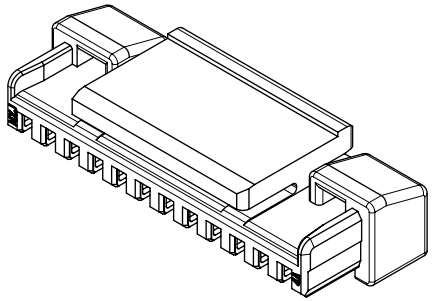

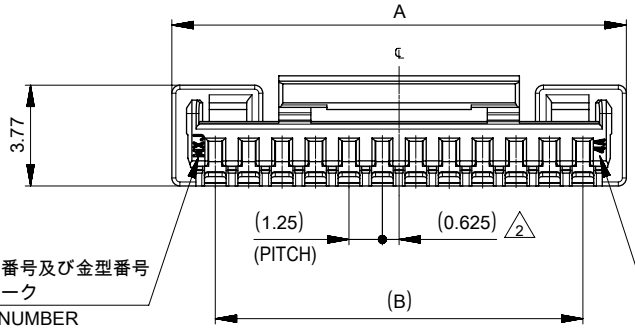

奇数キャビティ：キャビティ番号及び金型番号
偶数キャビティ：トレードマーク
ODD CAV:CAVITY & MOLD NUMBER
EVEN CAV:TRADE MARK

奇数キャビティ：トレードマーク
偶数キャビティ：キャビティ番号及び金型番号
ODD CAV:TRADE MARK
EVEN CAV:CAVITY & MOLD NUMBER

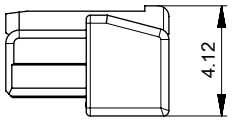

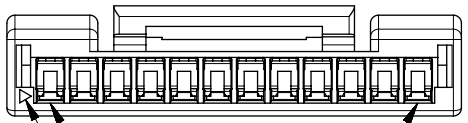

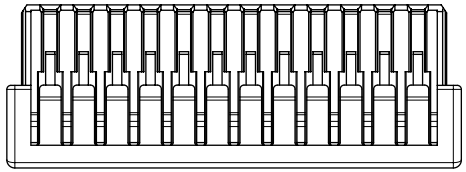

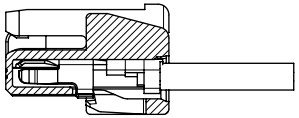

ターミナル装着図
TERMINAL ASSEMBLY DRAWING

開發部
2023.06.21
發行
鈺緯科技開發股份有限公司

注記 NOTE

1. 材料：TABLE 1参照
   MATERIAL : SEE TABLE 1.
2. 偶数極に適用。
   APPLY FOR EVEN CIRCUIT.
3. 製品仕様書、コネクタ取扱説明書、適用嵌合相手、適用端子はSHEET3をご参照ください。
   PLEASE REFER TO SHEET 3 FOR PRODUCT SPECIFICATION, APPLICATION SPECIFICATION, MATE WITH, APPLICABLE TERMINAL.
4. 発注番号　ORDER NUMBER

505565**0*

極数
CIRCUIT SIZE

番号 NO.	ハウジングカラー HOUSING COLOR
0	ナチュラル（ベージュ） NATURAL(BEIGE)
1	黒 BLACK
2	赤 RED
3	黄 YELLOW
4	青 BLUE
6	緑 GREEN
8	橙 ORANGE

1 TABLE 1

部品 PART	材質 MATERIAL
ハウジング HOUSING	PBT, UL94 V-0, 色 : SHEET3参照 PBT, UL94 V-0, COLOR : SEE SHEET 3.

DOCUMENT STATUS	P1	RELEASE DATE	2020/01/21 07:57:36

18.75	22	16
17.50	20.75	15
16.25	19.5	14
15	18.25	13
13.75	17	12
12.5	15.75	11
11.25	14.5	10
10	13.25	9
8.75	12	8
7.5	10.75	7
6.25	9.5	6
5	8.25	5
3.75	7	4
2.5	5.75	3
1.25	4.5	2
B	A	極数 CIRCUIT SIZE

THIS DRAWING CONTAINS INFORMATION THAT IS PROPRIETARY TO MOLEX ELECTRONIC TECHNOLOGIES, LLC AND SHOULD NOT BE USED WITHOUT WRITTEN PERMISSION

DIMENSION UNITS	SCALE
mm	NTS

GENERAL TOLERANCES (UNLESS SPECIFIED)

ANGULAR TOL	±	3.0 °
4 PLACES	±	0.2
3 PLACES	±	0.2
2 PLACES	±	0.2
1 PLACE	±	0.2
0 PLACES	±	0.2

DRAFT WHERE APPLICABLE MUST REMAIN WITHIN DIMENSIONS

CURRENT REV DESC: REVISED

EC NO: 630688
DRWN: TAKAIKE 2019/08/21
CHK'D: SAKIYAMA 2020/01/21
APPR: KOMURAKAMI 2020/01/21

INITIAL REVISION:
DRWN: RWATANABE01 2017/09/14
APPR: TKANEKO 2017/09/26

THIRD ANGLE PROJECTION | DRAWING: A3-SIZE | SERIES: 505565

molex

MICRO-LOCK PLUS 1.25 W/B
SINGLE ROW RECEPTACLE HOUSING

PRODUCT CUSTOMER DRAWING

DOCUMENT NUMBER	DOC TYPE	DOC PART	REVISION
5055650002-SD	PSD	000	E

MATERIAL NUMBER	CUSTOMER	SHEET NUMBER
SEE SHEET3	GENERAL	1 OF 3

FORMAT: margin-B-sheet-A3
REVISION: H
DATE: 2018/01/

製品形状
PRODUCT SHAPE

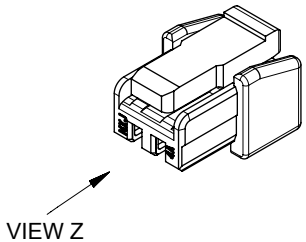

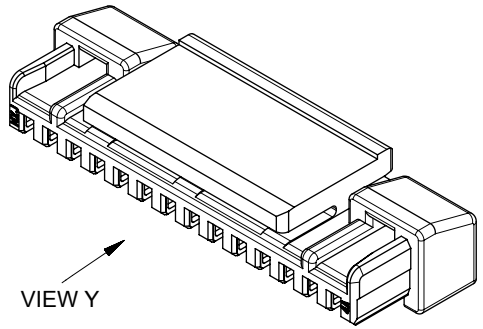

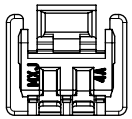

VIEW Z

2-13極
2-13 CIRCUIT

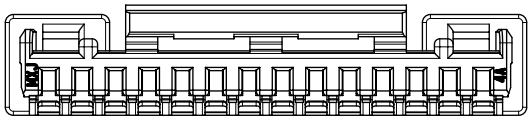

VIEW Y

14-16極
14-16 CIRCUIT

開發部
2023.06.21
發行
鈺緯科技開發股份有限公司

THIS DRAWING CONTAINS INFORMATION THAT IS PROPRIETARY TO MOLEX ELECTRONIC TECHNOLOGIES, LLC AND SHOULD NOT BE USED WITHOUT WRITTEN PERMISSION

DIMENSION UNITS	SCALE
mm	NTS

GENERAL TOLERANCES (UNLESS SPECIFIED)

ANGULAR TOL	±	3.0°
4 PLACES	±	0.2
3 PLACES	±	0.2
2 PLACES	±	0.2
1 PLACE	±	0.2
0 PLACES	±	0.2

DRAFT WHERE APPLICABLE MUST REMAIN WITHIN DIMENSIONS

CURRENT REV DESC: REVISED

EC NO: 630688
DRWN: TAKAIKE 2019/08/21
CHK'D: SAKIYAMA 2020/01/21
APPR: KOMURAKAMI 2020/01/21

INITIAL REVISION:
DRWN: RWATANABE01 2017/09/14
APPR: TKANEKO 2017/09/26

THIRD ANGLE PROJECTION | DRAWING: A3-SIZE | SERIES: 505565

molex

MICRO-LOCK PLUS 1.25 W/B
SINGLE ROW RECEPTACLE HOUSING

PRODUCT CUSTOMER DRAWING

DOCUMENT NUMBER	DOC TYPE	DOC PART	REVISION
5055650002-SD	PSD	000	E

MATERIAL NUMBER	CUSTOMER	SHEET NUMBER
SEE SHEET3	GENERAL	2 OF 3

DOCUMENT STATUS	P1	RELEASE DATE	2020/01/21	07:57:36

FORMAT: mastergrid-A3
REVISION: H
DATE: 2018/01/16

3 適用製品及び各種仕様書 APPLICABLE PRODUCTS AND VARIOUS SPECIFICATIONS

	製品番号 PART NUMBER	仕様書番号 SPECIFICATION NUMBER
梱包仕様書 PACKAGING SPECIFICATION	505565**0*	5055659200 PS 200

	製品番号 PART NUMBER	めっきタイプ PLATING TYPE	電線サイズ WIRE SIZE(AWG)
適用端子 APPLICABLE TERMINAL	5054311000	TIN	#26-30
	5054311*00 1,2,3	GOLD	

適用嵌合相手 MATE WITH	TIN PLATING		GOLD PLATING	
	VERTICAL	RIGHT ANGLE	VERTICAL	RIGHT ANGLE
シリーズ番号 SERIES NUMBER	505568 **7*	505567**7*	505568**** 3,5,8	505567**** 3,5,8
製品仕様書 PRODUCT SPECIFICATION	5055650000 PS 000		5055650002 PS 000	
コネクタ取扱説明書 APPLICATION SPECIFICATION	AS-505565-001 (ENGLISH/JAPANESE)			

開發部
2023.06.21
發行
鈺鐘科技開發股份有限公司

4 505565**0* 発注番号一覧 ORDER NUMBER LIST

橙 ORANGE	緑 GREEN	青 BLUE	黄 YELLOW	赤 RED	黒 BLACK	ナチュラル（ベージュ） NATURAL (BEIGE)	ハウジングカラー HOUSING COLOR
5055651608	5055651606	5055651604	5055651603	5055651602	5055651601	5055651600	16
5055651508	5055651506	5055651504	5055651503	5055651502	5055651501	5055651500	15
5055651408	5055651406	5055651404	5055651403	5055651402	5055651401	5055651400	14
5055651308	5055651306	5055651304	5055651303	5055651302	5055651301	5055651300	13
5055651208	5055651206	5055651204	5055651203	5055651202	5055651201	5055651200	12
5055651108	5055651106	5055651104	5055651103	5055651102	5055651101	5055651100	11
5055651008	5055651006	5055651004	5055651003	5055651002	5055651001	5055651000	10
5055650908	5055650906	5055650904	5055650903	5055650902	5055650901	5055650900	9
5055650808	5055650806	5055650804	5055650803	5055650802	5055650801	5055650800	8
5055650708	5055650706	5055650704	5055650703	5055650702	5055650701	5055650700	7
5055650608	5055650606	5055650604	5055650603	5055650602	5055650601	5055650600	6
5055650508	5055650506	5055650504	5055650503	5055650502	5055650501	5055650500	5
5055650408	5055650406	5055650404	5055650403	5055650402	5055650401	5055650400	4
5055650308	5055650306	5055650304	5055650303	5055650302	5055650301	5055650300	3
5055650208	5055650206	5055650204	5055650203	5055650202	5055650201	5055650200	2
発注番号 ORDER NUMBER							極数 CIRCUIT SIZE
梱包形態：ポリ袋 PACKAGING : POLYBAG PACKAGE							

THIS DRAWING CONTAINS INFORMATION THAT IS PROPRIETARY TO MOLEX ELECTRONIC TECHNOLOGIES, LLC AND SHOULD NOT BE USED WITHOUT WRITTEN PERMISSION

DIMENSION UNITS	SCALE	CURRENT REV DESC: REVISED	molex
mm	NTS		MICRO-LOCK PLUS 1.25 W/B SINGLE ROW RECEPTACLE HOUSING
GENERAL TOLERANCES (UNLESS SPECIFIED)		EC NO: 630688	PRODUCT CUSTOMER DRAWING
ANGULAR TOL ± 3.0°		DRWN: TAKAIKE 2019/08/21	
4 PLACES ± 0.2		CHK'D: SAKIYAMA 2020/01/21	
3 PLACES ± 0.2		APPR: KOMURAKAMI 2020/01/21	
2 PLACES ± 0.2		INITIAL REVISION:	
1 PLACE ± 0.2		DRWN: RWATANABE01 2017/09/14	
0 PLACES ± 0.2		APPR: TKANEKO 2017/09/26	

DOCUMENT NUMBER	DOC TYPE	DOC PART	REVISION
5055650002-SD	PSD	000	E

DRAFT WHERE APPLICABLE MUST REMAIN WITHIN DIMENSIONS	THIRD ANGLE PROJECTION	DRAWING	SERIES	MATERIAL NUMBER	CUSTOMER	SHEET NUMBER
		A3-SIZE	505565	SEE SHEET3	GENERAL	3 OF 3

DOCUMENT STATUS	P1	RELEASE DATE	2020/01/21 07:57:36

FORMAT: master-dwg-A3
REVISION: H
DATE: 2018/01/

UL 1061 HOOK-UP WIRE
80℃ 300V PVC 半硬质 PVC 電子線

UL Subject 758

UL FILE NO：E309338

▲說明：

- 導體使用單條或絞線 30-16AWG 裸銅或鍍錫銅
- 半硬質 PVC 絕緣
- 額定溫度：80°C，額定電壓：300 Volts
- 使用標準厚度,易剝,截斷容易
- 可通過 UL VW-1 及 CSA FT1，垂直型耐燃測試

Product Description:

- Solid or stranded,tinned or bare copper conductor,30-16AWG
- Color-coded semi-rigid PVC insulation
- Rated temperature: 80°C,Rated voltage: 300 Volts
- Uniform thickness of wire to ensure easy stripping and cutting
- Passed UL VW-1 & CSA FT1 vertical flame test

▲ 應用：

●電子設備設備內部配線。

Applications:

●Internal wiring in electronic equipments

構造和電氣性能

Structure & electric properties



UL 1061 CSA TR-64	額定 Range		導體 Conducor		絕緣體 Insulation		公差值 Tolerance mm	最大導體阻抗 Maximum Conductor Resistance Ω/km	最小絕緣阻抗 Minimum Insulation Resistance Ω/km	絕緣耐電壓 (VAC/min) Insulation Potential Strength
	溫度 Temp °C	電壓 Voltage V	線號 AWG	構成 No./mm	厚度 Thickness mm	外徑 O.D. mm				
多芯線 Stranded	80°C	300V	30	7/0.100	0.23	0.80	±0.05	397.0	15	2000
			28	7/0.127	0.23	0.90	±0.05	248.0		
			26	7/0.160	0.23	1.00	±0.05	152.0		
			24	11/0.16	0.23	1.15	±0.10	88.6		
			22	**17/0.16**	**0.23**	**1.30**	**±0.10**	**62.5**		
			20	21/0.18	0.23	1.50	±0.10	39.5		
			18	34/0.18	0.23	1.70	±0.10	24.4		
			16	26/0.25	0.23	2.00	±0.10	15.6		
先绞后镀 Top-Coated (ATC)			28	7/0.127	0.23	0.90	±0.10	248.0		
			26	7/0.160	0.23	1.00	±0.10	152.0		
			24	7/0.200	0.23	1.15	±0.10	88.6		
			22	7/0.254	0.23	1.30	±0.10	62.5		
單芯線 Solid(TA)			28	7/0.320	0.23	0.85	±0.10	232.1		
			26	1/0.404	0.23	0.90	±0.10	155.0		
			24	1/0.511	0.23	1.10	±0.10	92.4		
			20	1/0.643	0.23	1.15	±0.10	60.1		

UL 1061 HOOK-UP WIRE
80℃ 300V PVC 半硬质 PVC 電子線

UL Subject758 UL FILE NO：E309338

STYLE			UL 1061							
RATING TEMP / VOLT			80℃/300V							
	SIZE	AWG	28	26	24	**22**	20	18	16	SAME AS UL
	NUMBER	NO.	7	7	11	**17**	21	34	26	
	DIAMETER	MM	0.127	0.160	0.160	**0.160**	0.180	0.180	0.254	
	MIN.DIAMETER	MM	0.117	0.150	0.150	**0.150**	0.170	0.170	0.244	
	CROSS SEC AREA OF COND AVG.	C.M	159	253	404	**640**	1020	1620	2580	
	CROSS SEC AREA OF COND MIN.	C.M	156	248	392	**621**	989	1571	2503	
	LAY OF BUNCH	INCH	0.50	0.60	0.70	**0.80**	1.25	2.00	2.00	
	MAX.RESISTANCE	Ω /KM	248	152	88.66	**62.5**	39.5	24.4	15.6	
INSULATION	O.D.(±0.10)	MM	0.90	1.00	1.15	**1.30**	1.50	1.70	2.00	
INSULATION	INSULATION THICKNESS AVG	MIL	9							9
INSULATION	INSULATION THICKNESS MIN	MIL	7							7
INSULATION	JACKET THICKNESS AVG	MIL								
INSULATION	JACKET THICKNESS MI	MIL								
INSULATION RESISTANCE		MΩ/KM	15							
SPARK TEST		KV	2							4
ELONGATION		%	100 (SPEED 2inch/min)							
TENSIL STRENGTH		PSI	3000							
ELO.(AFTER AGING)		%	OF UNAGED 70							75
TEN.ST.(AFTER AGING)		%	OF UNAGED 70							75
AGING TEMP TIME			113℃/168HRS							121℃/168HRS
FIAME TEST			VW-1							FT1
HEAT SHOCK TEST			121℃/1HR 1.60MM MANDREL							
DEFORMATION TEST			113℃/1HR 500G(24,22,20AWG);250G(26,28AWG) 50%							
COLD BEND TEST			-10℃/1HR 1.6MM MANDREL							
INSULATION POTENTIALST			2KVAC/MIN							

印 字 内 容： AWM 1061 VW-1 80° C 300V E309338 （32-16）AWG KAI TAT CO AWM I A SR-PVC 90° C 300V （32-16）AWG FT1 -LF-

CHINGLUNG WIRE & CABLE CO.,LTD

SPECIFCATION	UL2725 28AWG/1P+28AWG/2C+AL/MY+DW+BRAID+JACKET		
ITEM		**SPECIFICATION**	
CONDUCTOR	AWG	28AWG/1P	28AWG/2C
	MATERIAL	TINNED COPPER	TINNED COPPER
	COND.SIZE	7/0.127mm	7/0.127mm
INSULATION	AVG.THICK	0.23mm	0.23mm
	MATERIAL	HD-PE	SR-PVC
	OD	0.85+0/-0.05mm	0.85+0/-0.05mm
SHIELD	MATERIAL	AL/MY (Face Outside)	
	COVERAGE	100%	
	OVERLAP	25%	
DRAIN	MATERIAL	TINNED COPPER	
	COND.SIZE	7/0.127mm	
BRAID	MATERIAL	TINNED COPPER	
	COVERAGE	70%	
	COND.SIZE	16/5/0.08mm	
JACKET	AVG.THICK	0.40mm	
	MATERIAL	80℃ 70P/PVC	
	COLOR	BLACK/HALF MATT (CUL01001)	
	OD	3.50±0.15mm	

CROSS SECTION

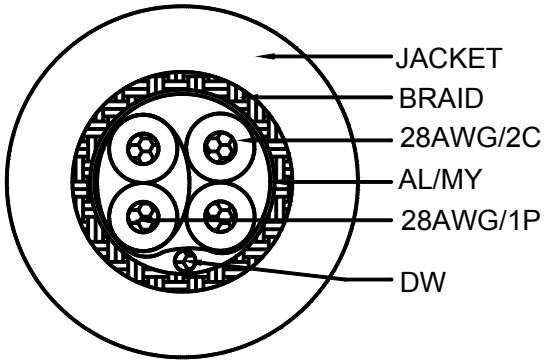

COLOR CODE

28AWG/1P:
GREEN-WHITE
28AWG/2C:
1.BLACK 2.RED

MARKING

E238846 AWM 2725 80℃ 30V VW-1
28AWG/1P AND 28AWG/2C HIGH SPEED
USB2.0 CABLE CHINGLUNG

PRINTING COLOR		WHITE	
APPROVED		CUSTOMER	稳德
CHECKED		REV	0994-04006
DRAWING		DATE	23-Sep-14

ELECTRICAL CHARACTERISTICS

1.Rating:TEMP 80℃ VOLTAGE 30V
2.Conductor Resistance:AT20℃ MAX
28AWG:237.25Ω/km
3.Impedance:90±15Ω

PHYSICAL PROPERTIES

TEL: 0769-83665661 83665662 FAX: 83665663

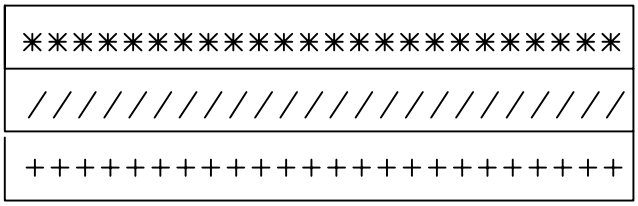

产品构成图

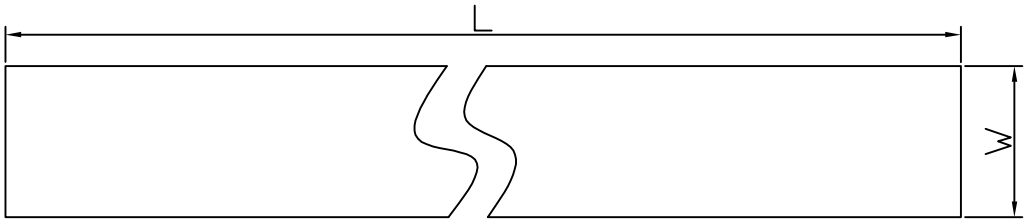

備註：

1.符合本公司及客戶環保要求

2.公差:寬 ±0.5mm 長±0.3M

3.成卷

4.材質：醋酸布,厚度=0.21±0.02mm

5.粘著力：1.2kgf/inch

6.初粘：≦28CM

7.保持力：≧1440minute

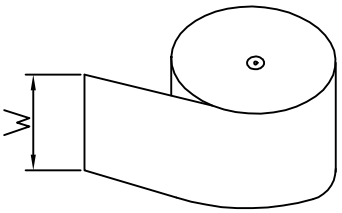

8.膠帶應用之理想溫度範圍是23℃±５℃，濕度範圍是55%±5%,建議使用時黏貼表面不低於10℃,否則容易因膠體太硬,而無法牢固地貼合被貼物,減低膠帶粘著力.高於35℃以上時,膠體會軟化,破坏性能,黏貼較容易張口.膠帶儲存於低溫環境下,需將膠帶回溫至室溫(約23℃)三小時以上再行使用.膠帶於高溫加熱環境狀態下使用時,瞬間溫度勿超過180℃.

9.由於布類染色每批都會有有顏色差異及布的紋路不同，但不會影響到產品的性能。

10.膠帶應放置恒溫恒濕之環境,避免高溫濕或日曬,以妥爲保管條件下,品質證期間爲製造出廠三個月內.



客戶回簽蓋章	版次	版次說明	日期	東莞市信名寬電子科技有限公司			
	A1	新承認	20201114				
				規格	WmmX Lm	單位	mm
				品名料號	醋酸布（1152XY）	客戶	穩德
				客戶料號		繪圖	
				圖檔號	BY0026-20201116-WXL	審核	葉樹明

标准型(S-901)热缩套管尺寸检验标准

产品规格	收缩前尺寸(mm)		完全收缩后尺寸(mm)		包装长度 M
	内径(D)	壁厚(T)	内径(D)	壁厚(T)	
Φ0.8	0.9±0.2	0.15±0.08	≤0.4	0.30±0.06	400±2
Φ1.0	1.5±0.2	0.15±0.08	≤0.6	0.36±0.06	400±2
Φ1.5	2.0±0.2	0.18±0.08	≤0.8	0.40±0.08	400±2
Φ2.0	2.5±0.2	0.18±0.08	≤1.00	0.42±0.08	400±2
Φ2.5	3.0±0.2	0.18±0.08	≤1.25	0.42±0.08	400±2
Φ3.0	3.5±0.3	0.22±0.10	≤1.5	0.46±0.08	400±2
Φ3.5	4.0±0.3	0.25±0.10	≤1.75	0.46±0.08	400±2
Φ4.0	4.5±0.3	0.25±0.10	≤2.0	0.48±0.08	400±2
Φ4.5	5.0±0.3	0.25±0.10	≤2.25	0.50±0.10	400±1
Φ5.0	5.5±0.4	0.25±0.10	≤2.5	0.50±0.10	200±1
Φ6.0	6.5±0.4	0.28±0.12	≤3.0	0.56±0.10	200±1
Φ6.5	7.0±0.4	0.28±0.12	≤3.25	0.56±0.10	200±1
Φ7.0	7.5±0.4	0.28±0.12	≤3.5	0.58±0.10	100±1
Φ8.0	8.5±0.5	0.28±0.12	≤4.0	0.60±0.10	100±1
Φ9.0	9.5±0.5	0.30±0.12	≤4.5	0.60±0.10	100±1
Φ10	10.5±0.5	0.30±0.12	≤5.0	0.60±0.10	100±1
Φ11	11.5±0.5	0.30±0.12	≤5.5	0.60±0.10	100±1
Φ12	12.5±0.5	0.30±0.12	≤6.0	0.60±0.10	100±1
Φ13	13.5±0.5	0.35±0.12	≤6.5	0.65±0.12	100±1
Φ14	14.5±0.5	0.35±0.12	≤7.0	0.65±0.12	100±1
Φ15	15.5±0.5	0.40±0.12	≤7.5	0.65±0.12	100±1
Φ16	16.5±0.5	0.36±0.12	≤8.0	0.65±0.12	50±0.5
Φ17	17.5±0.5	0.36±0.12	≤8.5	0.65±0.12	50±0.5
Φ18	18.7±0.6	0.40±0.15	≤9.0	0.70±0.12	50±0.5
Φ20	20.6±0.6	0.40±0.15	≤10.0	0.75±0.15	50±0.5
Φ22	22.7±0.6	0.40±0.15	≤11.0	0.80±0.15	50±0.5
Φ25	25.5±0.7	0.40±0.15	≤12.5	0.90±0.15	50±0.5
Φ28	29.0±0.7	0.45±0.20	≤14.0	0.95±0.15	50±0.5
Φ30	31.0±0.7	0.45±0.20	≤15.0	0.95±0.15	50±0.5
Φ35	36.0±1.0	0.50±0.22	≤17.5	1.00±0.20	50±0.5
Φ40	41.0±1.0	0.55±0.25	≤20.0	1.10±0.25	50±0.5
Φ45	46.0±1.0	0.55±0.25	≤22.5	1.10±0.25	50±0.5
Φ50	51.5±1.5	0.60±0.25	≤26.0	1.20±0.25	50±0.5
Φ55	≥55	0.60±0.25	≤28.0	1.20±0.25	50±0.5
Φ60	≥60	0.60±0.25	≤30.0	1.20±0.25	50±0.5
Φ70	≥70	0.70±0.30	≤35.0	1.45±0.25	50±0.5
Φ80	≥80	0.70±0.30	≤40.0	1.45±0.25	50±0.5
Φ95	≥95	0.70±0.30	≤45.0	1.45±0.25	50±0.5
Φ100	≥100	0.70±0.30	≤50.0	1.45±0.25	50±0.5

附产品图示:

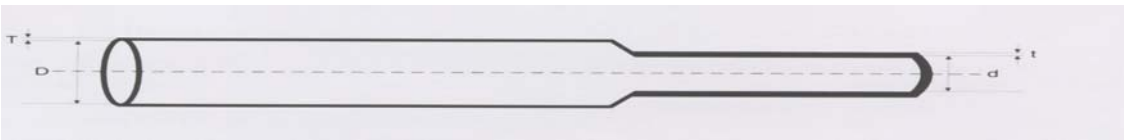

薄壁型(S-901A)热缩套管尺寸检验标准

产品规格	收缩前尺寸(mm)		完全收缩后尺寸(mm)		包装长度 M
	内径(D)	壁厚(T)	内径(D)	壁厚(T)	
Φ0.5	0.7±0.2	0.09±0.05	≤0.4	0.22±0.06	400±2
Φ0.6	0.8±0.2	0.12±0.05	≤0.4	0.22±0.06	400±2
Φ0.8	0.9±0.2	0.12±0.05	≤0.4	0.25±0.06	400±2
Φ1.0	1.5±0.2	0.10±0.05	≤0.6	0.25±0.06	400±2
Φ1.5	2.0±0.2	0.10±0.05	≤0.8	0.25±0.06	400±2
Φ2.0	2.5±0.2	0.13±0.06	≤1.00	0.28±0.06	400±2
Φ2.5	3.0±0.2	0.15±0.06	≤1.25	0.28±0.06	400±2
Φ3.0	3.5±0.3	0.15±0.06	≤1.5	0.30±0.06	400±2
Φ3.5	4.0±0.3	0.15±0.06	≤1.75	0.30±0.06	400±2
Φ4.0	4.5±0.3	0.15±0.06	≤2.0	0.30±0.06	400±2
Φ4.5	5.0±0.3	0.15±0.06	≤2.25	0.30±0.06	400±1
Φ5.0	5.5±0.4	0.15±0.06	≤2.5	0.30±0.06	200±1
Φ6.0	6.5±0.4	0.15±0.06	≤3.0	0.30±0.06	200±1
Φ7.0	7.5±0.4	0.18±0.08	≤3.5	0.36±0.08	200±1
Φ8.0	8.5±0.5	0.18±0.08	≤4.0	0.36±0.08	200±1
Φ9.0	9.5±0.5	0.18±0.08	≤4.5	0.36±0.08	200±1
Φ10	10.5±0.5	0.18±0.08	≤5.0	0.36±0.08	200±1
Φ11	11.5±0.5	0.18±0.08	≤5.5	0.36±0.08	200±1
Φ12	12.5±0.5	0.18±0.08	≤6.0	0.36±0.08	100±1
Φ13	13.5±0.5	0.20±0.08	≤6.5	0.40±0.10	100±1
Φ14	14.5±0.5	0.20±0.08	≤7.0	0.40±0.10	100±1
Φ15	15.5±0.5	0.20±0.08	≤7.5	0.40±0.10	100±1

附产品图示:

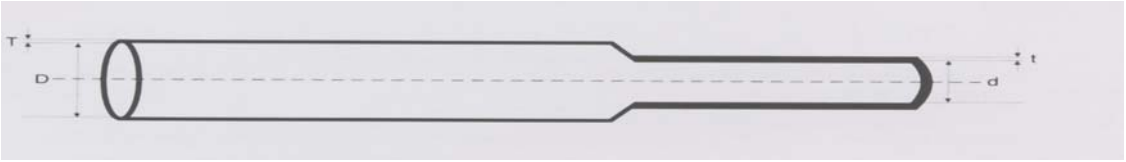

说明：我公司生产的热缩套管**产品铅、镉、汞、六价铬、PBB、PBDE等环境管理物质含量**符合欧盟 **RoHS** 指令和 **SONY SS-00259** 环境技术标准，其中黑色热缩套管是无卤环保产品。