OLÓRIN

Display User's Manual

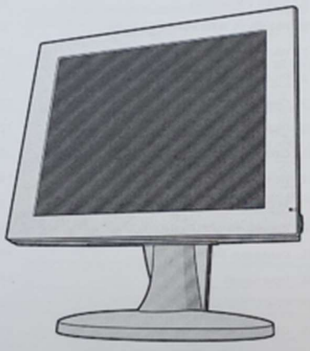

MedicLine MM191D

19" Monochrome LCD Display

www.olorin.com

開發部
2023.06.16
發行
鈺鐘科技開發股份有限公司

OLORIN
User's Manual
3MD231PR010

承　　認　　書

SPECIFICATION　FOR　APPROVAL

客戶:鈺緯科技開發股份有限公司

品名:80P 高白環保道林紙

規格:210mm*148mm

料號:3MD231PR010(M3117)

開發部
2023.06.16
發行
鈺緯科技開發股份有限公司

主　管	審　查	製　作
游鈺衡	游鈺崧	王瀞融

俐元企業股份有限公司

俐誠企業股份有限公司

LI YUN　ENTERPRISE CO.LTD.

LI CHENG ENTERPRISE CO.LTD.

地址：新北市樹林區三龍街 20-1 號

電話:(02)8688-8680　　傳真:(02)8688-8678

中　華　民　國 112 年 06 月 07 日

REV.	DATE	DESCRIPTION	BY	APVD

148 ±1

210 ±1

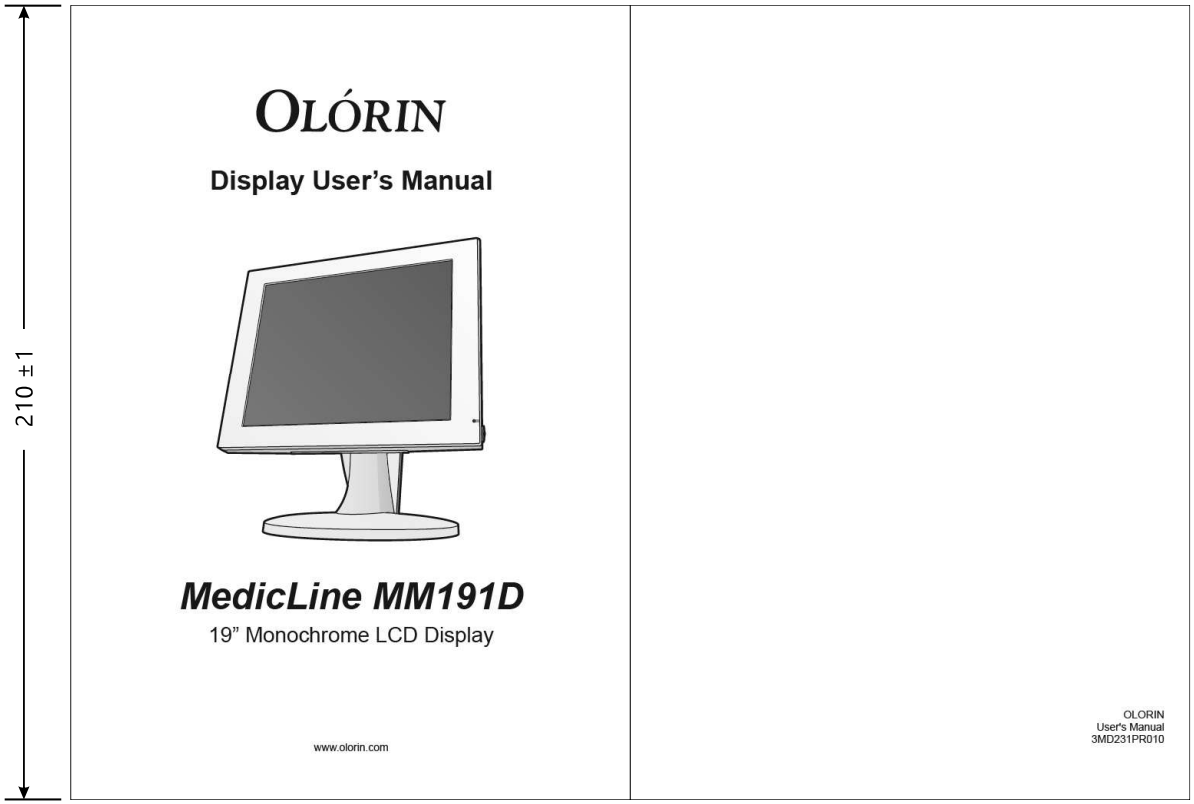

封面　　封底

Note:
1.材質：80磅白道林紙
2.規格：A5 size
3.黑白單色印刷，膠裝
4.檢驗規範文件號碼：QWI-021

開發部
2023.06.16
發行
鈺緯科技開發股份有限公司

THIRD ANGLE PROJECTION	UNITS: mm	SCALE: 1/1	SHEET: 1/1	MODEL NO.: MM191D
	MATERIAL:		TREATMENT:	
DSGD by ALICIA	2019/09/03	PART NAME: USER'S MANUAL		
APVD by Laslie	2019.09.04 16:54:21 +08'00'	PART NO.: 3MD231PR010		VER. 0
APVD NO.: M3117	FILE NAME: 3MD231PR010.cdr	DIVA Laboratories, Ltd.		

俐元企業股份有限公司
俐誠企業股份有限公司

成品出廠檢驗表

表單編號：FM-42A

客戶名稱	鈺緯	訂單號碼		交貨數量	
料號	3MD231PR010 (M3117)	品名規格	210mm*148mm	檢驗日期	

序號	規　格	檢　驗　值					檢驗結果	
	依客戶圖面檢驗	1	2	3	4	5	OK	NG
1	210 ±1	210.53	210.49	210.52	210.48	210.51	✓	
2	148 ±1	148.51	148.48	148.53	148.49	148.52	✓	
3								
4								
5								
6								
7								
8								
9								
10								

主管: 游閔智　　品管組長: 黃惠珍　　品檢員: 林素后

OLÓRIN

Display User's Manual

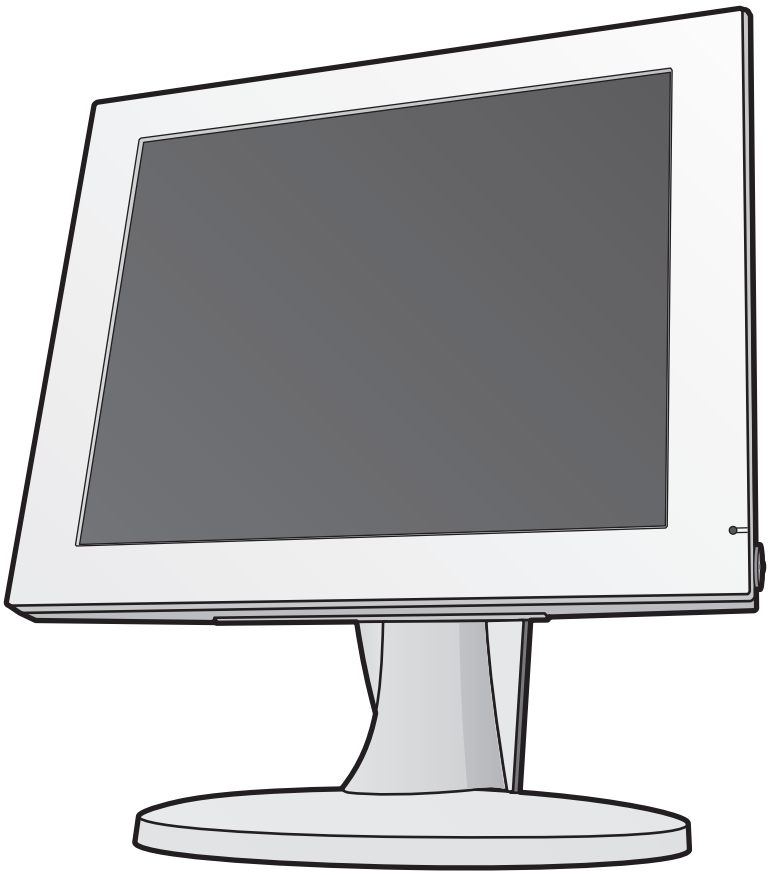

MedicLine MM191D

19" Monochrome LCD Display

www.olorin.com

Contents

1. Preface 3
2. Product features 4
3. Intended use of this product 5
4. Intended markets 5
5. Safety Precautions 6
6. Regulatory Tests and Certifications 9
7. Warranty and Limitation of Liability 10
8. Product identification 11
9. Cleaning of the Product 12
10. Disposal of the Product 12
11. Getting started 13
12. How to assemble Panel and Base unit 14
13. Mounting on a wall or LCD arm 15
14. Rotating the LCD Panel 16
15. Connection Method 17
16. Input signals 18
17. How to Operate 19
18. OSD Adjustment Functions 21
19. Applicable Signal Timings 23
20. Specifications 24
21. Special Considerations for LCD Panels 26
22. Longer life for your monitor 28
23. Troubleshooting 29
24. Reference 30
25. Contact information 31

Preface

Thank-you for purchasing this Olorin LCD Monitor.

To get the full benefit of the features that this product offers you, it is important that you read this Users Manual which, among other things, will explain how to properly install and operate the monitor. In this user guide there are detailed product specifications, explanations for many of the technical terms used in this manual as well as information on regulatory approvals, cleaning and service instructions, warranty terms, waste disposal and some other useful information.

It is of utmost importance that you carefully read and follow the safety instructions and safety notices included in this User´s Manual.

Failure to comply with these instructions could in some instances cause bodily harm to yourself or other persons and/or un-repairable damage to the product or to other attached devices / appliances.

Throughout this manual the following symbols are used to guide you to the proper use of the product:

Symbols



Exresses DO NOT.



Warning

Person could be at risk of severe injury or death.



Caution

Person or properties could be at risk of injury or damage.



Expresses MUST DO.

Keep this Users Manual in an easy accessible and safe place for future reading of it. If you lose your copy, you may request a new one by contacting us at our internet home page www.olorin.com.

Olorin reserves the right to change the specifications of this product without any notice. Such changes could cause the operation of the product to be slightly different from the descriptions in this copy of the Users Manual.

Windows and MS-DOS are trademarks and/or registered trademarks of Microsoft Corporation in the United States and/or other countries. VESA is a trademark of the Video Electronics Standard Corporation. All other product and company names are trademarks of their respective owners.

Copyright © 2016

Product Features

Standard delivery

The product is normally delivered in 2 main parts, which, when mounted together, form a normal monitor for desktop use.

- a LCD panel with TFT picture element which also contains the lamps for the backlight along with necessary electronics and cable connectors as well as power connector. These parts are mounted inside a plastic housing.
- a base unit (stand) to be mounted at the VESA holes at the back of the panel.

For certain applications, when the monitor is to be placed on a wall or built into a desk, then only the LCD panel part is delivered. In these cases it is quite often delivered with the plastic housing removed in what is called “open frame”. Certain other options or special mounting components might have been pre-installed.



Warning

When the monitor has been delivered as open frame there is a greater risk to come in contact with electric parts which could cause harm to yourself or your property. It should therefore only be handled with special precausion and only by properly trained service personnel.

Power management

This unit has power management system. The monitor will go into “sleep mode”, where power consumption is less than 5W, whenever either horizontal or vertical signals or both disappear.

High performance panel element

The monochrome panel used in this product is specifically designed for advanced applications such as viewing digital X-ray images. ALS (Automatic Luminance Stabilization) circuits gives a stable picture for the life of the product. It has LED backlight for lower power consumption and longer product life.

Ergonomic features

To ease eyestrain on the user, the panel features excellent viewing angles. In addition, the base unit can be adjusted to fit the individual user’s need by adjusting the height and tilt of the monitor.

Preloaded DICOM curve

The monitor has several different preloaded DICOM curves for use as a plug-n-play X-ray review display, the DICOM curves can be set at different luminance values.

VESA® standard wall / arm mountings

The unit is compliant with VESA’s 100mm-pitch for hanging tools. The base unit is detachable; the panel can be mounted on a wall or arm according to user’s enviroment.

Security device slot for Kensington® security system

The monitor has an Anti-theft security device slot corresponding to the MicroSave® security system of Kensington®.

Easy cleaning

The monitor has specially designed protection for preventing water to enter into the panel when cleaning.

Intended use of this product

This product has been designed and developed for use as a visual output device for direct connection to a Personal Computer and PC compatible devices as well as other video generating equipment, such as cameras. The product will accept industry standard video signals coming over cables with industry standard type connectors. The product will operate and function properly in normal office environment and under conditions as specified in the Product Specification chapter.



Warning

Attempting to use the product for any other purpose than its intended use or connecting to other devices could cause damage to the product and / or to other property and equipment. There could also be a risk of bodily harm to yourself or other persons.

The product operates on AC 100-240V power and must be connected to a grounded power outlet.



Warning

All other uses of the product, including but not limited to attempts such as;

- **connection to other types of power sources**
- **other types of mounting or placement of the product**
- **connection to other devices than those for which the monitor has been designed.**

will void any and all warranties of the product and the manufacturer will not be responsible or libel for any bodily injury or property damage either directly or indirectly caused by such non-intended use of the product.

Intended Markets

Olorin products are developed primarily for sales and installation in countries within Europe and North America. The products comply with all regulations and directives issued by the European Union and many also comply with regulations for the United States.



Warning

The products are not intended for sales and/or installation in countries, which require other or additional mandatory approvals than those required by the authorities of the European Union or the United States.

Consult the product identification label or product specification for regulatory approvals that apply to this product.

Safety Precautions

It is important that you read through the following notes of Safety Precautions to avoid any damage to the Product, yourself or other property. Following these precautions will also ensure that you get the best use of the Product.

Warning

DO NOT OPEN THE PRODUCT. There are no user serviceable parts inside. Because of high voltage inside there is a risk of bodily injury or death. Only authorized and qualified service personnel should maintain the product.

Cautions when setting up

Caution

Do not put the unit on unstable places (on a wonky table or in an inclined place), which might cause injuries if it falls down.



Caution

Do not place the unit where it is subject to direct sunlight or near any heating device. This could cause overheating resulting in damage to the product and eventually causing a fire.

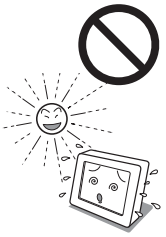

Cautions when using

Warning

Do not put the unit in such a place where there is bad air circulation, dust, humidity, oily smoke or steam. It may lead to a fire.



Caution

Do not put any metal materials or flammable foreign objects into the unit through vent holes. It may lead to electric shock and/or fire. Immediately disconnect the unit from the power outlet and contact your local re-seller for service.



Caution

Scratching or hitting with hard objecs may damage the unit.



Safety Precautions

Warning

Do not use the unit turned over on its back, put on its side, or upside down. These positions may cause the heat that the unit generates to accumulate inside the unit. Such overheating can cause damage to the product and eventually start a fire.



Caution

When using the unit for several hours, you should take a 10-15 minute break every hour to reduce eyestrain. Failure to do so could cause injury to your eyes.



Abnormal circumstances

Warning

In case of any abnormality such as odor, sound, and overheat taking place, immediately turn off the power and disconnect the plug from the outlet. For assistance contact your local re-seller.



Warning

In the event of thunder, immediately turn off the power and disconnect the plug from the outlet. Lightning strikes may cause electric shock and/or fire.

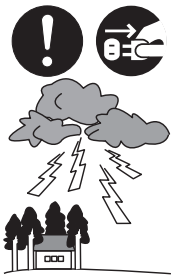

Warning

In the event of broken panel and leaking liquid crystal, do not inhale, swallow, or touch the liquid crystal. It may cause you to get poisoned and/or having a skin irritation. If you put it in your mouth, immediately gargle with water and contact a doctor to get a checkup. In case of getting it on your skin and/or cloth, wipe it off with alcohol and rinse them.



Safety Precautions

Maintenance

Warning

Do not remove the plastic cabinet. There are high voltage parts inside that may lead to electric shock. Ask a re-seller for adjustment and inspection.



Warning

Do not remodel or repair. It may lead to fire, electric shock, or injuries.

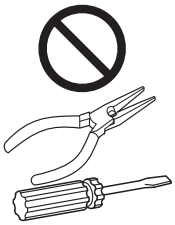

Caution

Clean the dust inside the display once a year. The dust that accumulates inside the unit may lead to fire. Ask a re-seller for adjustments and inspection.

Caution

Disconnect the plug from outlet when you do not use the unit for a prolonged period.

Regulatory Tests and Certifications

All Olorin products have normally been tested to comply with all mandatory Regulatory requirements for the markets where the products are sold. Approvals are listed by each Regulatory Agency under the name of the manufacturer and model number as specified on the Product Identification Label. Copies of such approvals can be requested by contacting Olorin AB via www.olorin.com.

Approvals applicable for this product is listed in the Product Specification section of this manual.

Tests and Approvals for VistaLine Series

Each product in the VistaLine series has been tested as an IT-category product for normal office environment and for use as a desktop monitor. They comply with the following standards and regulations:

- CE for use within the European Union member states
- WEEE for use within the European Union member states
- RoHS for use within the European Union member states

Tests and Approvals for MedicLine Series

Each product in the MedicLine series has additionally been tested for risk of electrical shock and to comply with

- MDD directive 93/42/EEC class 1 for the European Union member states
- EN60601-1, EN60601-1-2

Under these directives and regulations, MedicLine products are complying with the requirements for a Class 1 product with continues mode of operation. The monitor must not be in direct contact with a patient.



Warning

Connecting the monitor to a non-grounded power outlet voids the approval.



Warning

Before taking the product in use, the person installing it must test that the grounding of the monitor complies with the impedance requirements of the country where it is being installed.



Warning

When using at 240 V in the United States, supply must be from center-tapped, 240 V, single phase circuit.

Warranty and Limitation of Liability

Warranty

For details of the warranty please visit Olorin's website, http://www.olorin.com

Limitation of Liability

Olorin AB, including any of its affiliates, manufacturing partners and sales agents, is not liable for any claim for damages including, but not limited to, loss of business profits, disruption of business, change or loss of saved data, when damage is arising from

- fire, earthquakes, actions taken by any third party, any other accidents, intentionally or negligently, improper use of the product by the user, or any use under other abnormal circumstances,
- the use or inability to use this product,
- the use for other purposes than the intended use as described in this document
- malfunctions caused by the combination of connected devices

Product identification

Affixed to the panel part of the product is a Product Identification Label. This label contains the following information:

- Olorin logo and web address
- Product Family name (i e Olorin MedicLine MM191D)
- Manufacturers product number
- Part number
- Serial Number
- Power information
- Symbols for Regulatory approvals
- WEEE symbol for disposal of the product
- Manufacturers name
- Country of Origin

Cleaning of the Product



Caution

Be careful when cleaning the plastic housing of the panel so that no liquid or other objects will drip down into the product through the ventilation holes. This could cause electric shock and damage the product.

Normal dust and lint particles can be easily wiped off with a soft cloth tissue.

For grease or dirt that is more firmly fixed to the product, the use of a soft and dry micro fibre based cloth tissue will normally remove it all.

You can also use a mild liquid detergent mixed with water for cleaning together with a soft cloth tissue. This will clean both the cabinet and the LCD panel well. For the LCD panel you can also use isopropyl alcohol based liquids (without abrasive) or non-ammoniac glass cleaner.

When cleaning the LCD panel you will get the best result if you clean the panel when its surface has cooled down to normal room temperature. On a warm panel the liquid evaporates too quickly leaving traces of the cleaning. Afterwards wipe the surface dry with another soft cloth tissue.



Warning

When cleaning the cabinet do NOT use thinner, benzene or alcohol as these might damage the plastic and cause the paint to peel off. Do NOT use organic solvent such as acetone and toluene when cleaning the panel.



Warning

If you use any liquid for cleaning you must first un-plug the power to the monitor and not connect it again until you are certain that all the liquid particles have evaporated. Failure to do so could result in electric shock.



Caution

Do not use any tools with hard or sharp material for cleaning. The panel can very easily be scratched or damaged from such tools.



Caution

Do not press hard on the panel when cleaning. This could cause damage to the LCD panel element.

Disposal of the Product

Do not dispose of the unit with general wastes.

The monitor has been manufactured to comply with the EU directive on RoHS (Reduction of Harmful Substances) but even so the LCD panel contains a small amount of mercury and the monitor should therefore be disposed of according to local laws. Please get information from your local re-seller how collection is handled in your country. For countries that are members of the EU the WEEE directive applies and proper marking is on the product label affixed to the monitor.

Getting started

Before operating this monitor, please make sure that all items listed below are present in your delivery.

Standard Items

- The LCD monitor panel
- User's manual
- AC Power cord
- DVI-D to DVI-D cable

Optional Items

- The Base Unit with 4 Screws and Screwdriver

If any of the above items are found missing or if you wish to order the optional items, please contact your reseller.

Recommended cable connections

Olorin recommends that the monitor is connected DVI on the monitor, with either DVI to DVI or DisplayPort to DVI cable.

How to assemble Panel and Base unit

The product normally comes in 2 cartons and you need to assemble the panel and the base unit. A screwdriver and proper screws are included in the box for the base unit.

1. Remove the back of the base unit by grabbing it firmly at the top and pulling it up and backwards.

2. Place the monitor with the front down on a level surface. Make sure that there are no objects on the surface that could damage the panel element. It should be placed so that the OSD wheel is at the lower left corner seen from yourself.

   Place the metal plate onto the VESA mounting cut-out on the back of the panel. Hold the bottom of the base unit towards yourself.

   Test that you can swing the base unit to the left so that swivel between Landscape and Portrait will be correct.

3. Locate the holes in the back of the base unit through which you can stick the screwdriver to reach and put the 4 screws in place.

4. Remount the back cover.

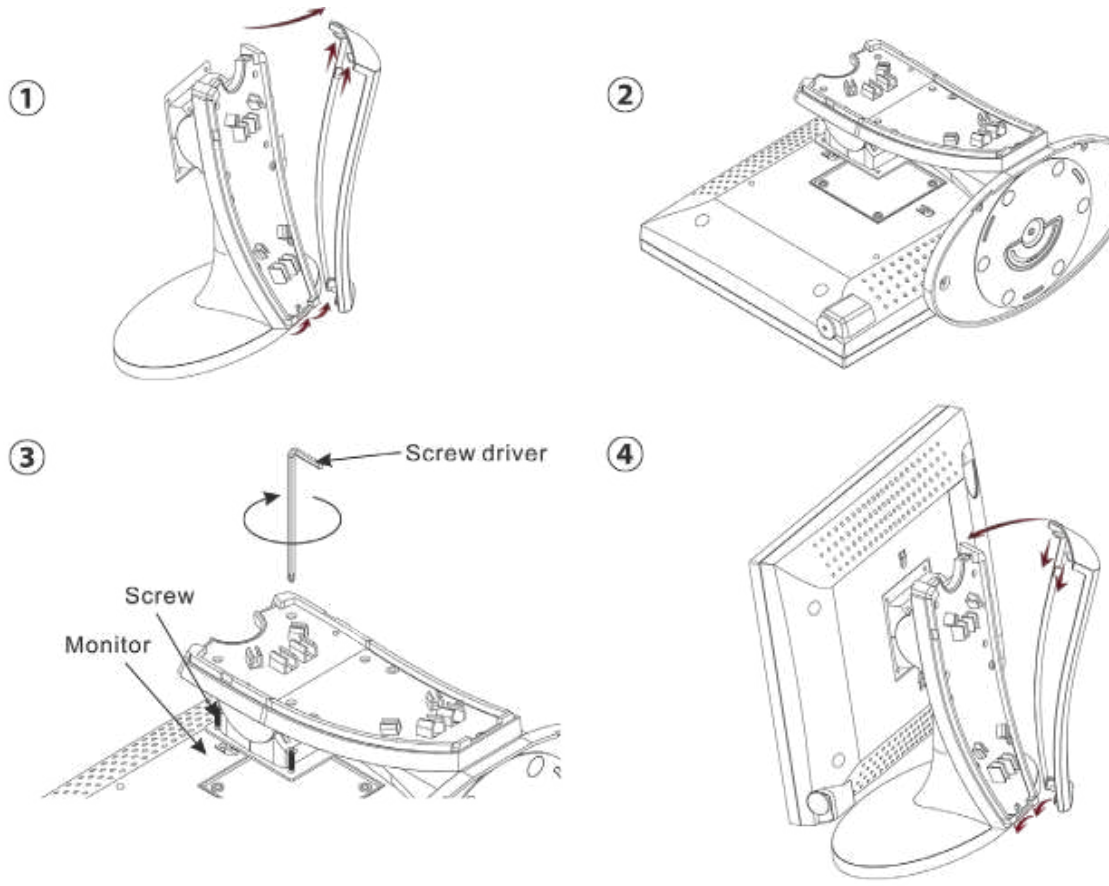

Caution

If you mount any device using these 4 holes on the back of the panel you must not use use screws longer than 10 mm. Longer screws will cause damage which is not covered by the product warranty.

Mounting on a wall or LCD arm

The Monitor can be mounted onto a wall or arm.

If you intend to mount the monitor on the wall, we strongly recommend that you use wall mount kits with attached M4*10mm screws and which can hold a load of more than monitor weight. Ensure it is securely and safely installed.

Caution

When mounting the monitor, take care to tighten the retention screws or bolts until fully secure, but do not over tighten. Over tightening the retention screws or bolts may cause them to become stripped, rendering them useless.

Wall mounting

The Monitor has Video Electronics Standards Association (VESA) standard mounting holes tapped into the rear panel. The standard holes are M4 set at 15” model 75mm x 75mm; 17” & 19” model 100 mm x 100 mm apart.

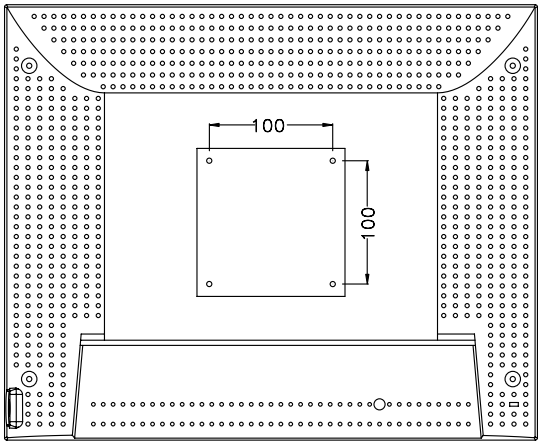

1. Select the location on the wall for the wall mounting bracket. (Listed VESA)
2. Carefully mark the locations of the four screw holes in the bracket on the wall
3. Drill four pilot holes at the marked locations on the wall for the bracket retention screws.
4. Align the wall-mounting bracket screw holes with the pilot holes.
5. Secure the mounting bracket to the wall by inserting the retention screws into the four pilot holes and tightening them.
6. Insert the four monitor mounting screws provided in the wall mounting kit into the four screw holes on the real panel of the LCD Monitor and tighten until the screw shank is secured against the rear panel.
7. Align the mounting screws on the monitor rear panel with the mounting holes on the bracket.
8. Carefully insert the screws through the holes and gently pull the monitor downwards until the monitor rests securely in the slotted holes. Ensure that all four of the mounting screws fit snuggly into their respective slotted holes.
9. Secure the LCD Monitor by fastening the retention screw of the wall-mounting bracket.

Rotating the LCD Panel

When setting the color LCD display to vertical display (portrait orientation), lift the LCD panel to the top of the base unit as shown in the figure below and rotate it by 90 degrees.

Procedure

1. Tilt the LCD panel upward.(Perform this procedure before sliding the panel upward.)
2. Lift the LCD panel to the top.
3. Rotate the LCD panel by 90 degrees.
4. Reposition the LCD panel to the bottom while in the vertical position (portrait orientation).

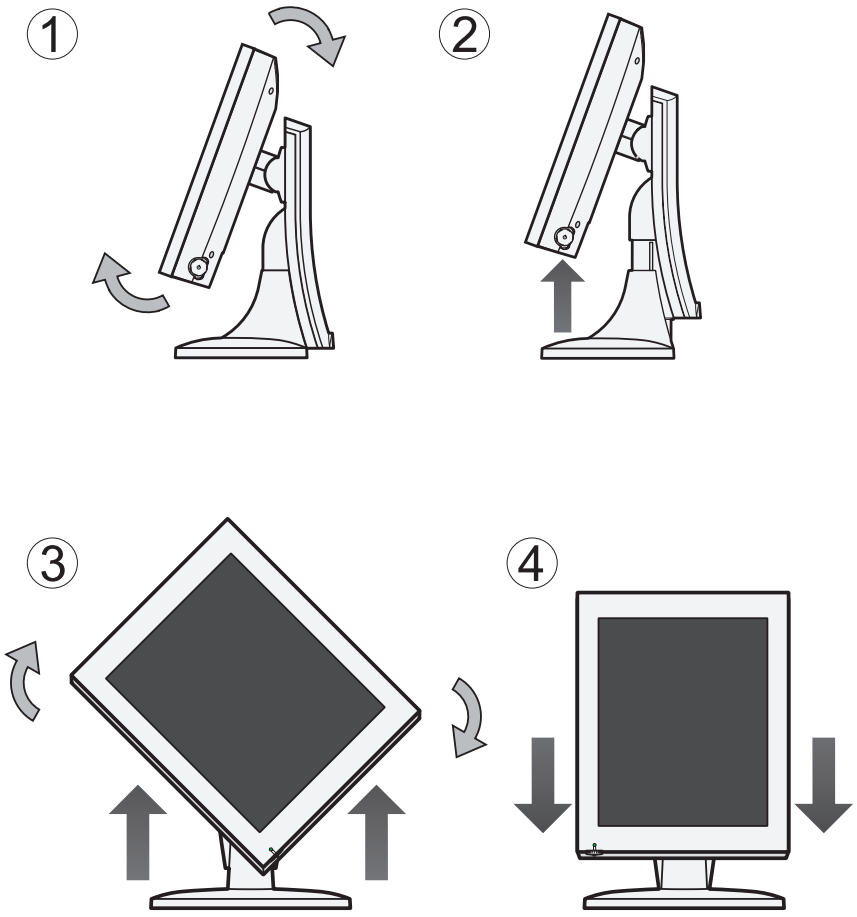

Display in portrait orientation

Pivot® software or graphics card that enables portrait orientation is necessary.

Connection Method

No tools are required to connect the LCD monitor to your PC or other device. Simply follow the instructions outlined in the next few pages.

Connectors for the signal cables and AC power are located on the back of the panel. Please refer to the diagram on this page for the connector configuration.

Connection of Signal cables

On next page you can see which input connectors there are available on your monitor and which cable you should connect depends on your source for the input signal.

Recommended cable connections

Olorin recommends that the monitor is connected DVI on the monitor, with either DVI to DVI or DisplayPort to DVI cable.

VGA, DVI, HDMI or Displayport output from a PC

If your source is VGA (analog) then use a VGA to VGA cable.

If your source is DVI (digital) then use the DVI-DVI cable supplied with the monitor and connect to the DVI connector on the monitor.

If your source is HDMI or Display-Port then you need a converter from HDMI or Display-Port to DVI. Then you connect the DVI-DVI cable between the DVI connector on the monitor and the converter. There are also available HDMI or Display-Port to DVI cables that can purchased from your local reseller.



Caution

When you disconnect the cord /cables, be sure to hold the connector and not the cable itself. Also make sure you use cables and connectors of high quality.

Connection of AC Power

1. Confirm that both the computer and monitor are turned off.
2. Connect the attached power cord between the power outlet and the monitor.
3. Turn on the monitor and computer.

AC Main Power supply Switch

The AC main power supply switch interrupts the AC input to the display. Placing the switch in the ON (I) position allows display to power-up.

Placing the switch in the OFF (O) position will cause the display to power down.

Input signals

Connections

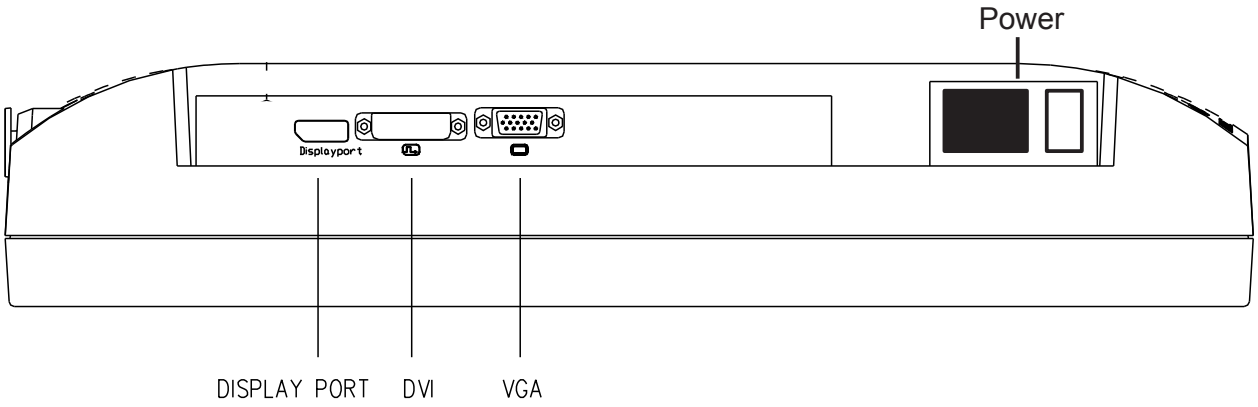

The prefered method for connecting DisplayPort is by using a DP to DVI cable, and use the DVI connector on the monitor.

How to Operate

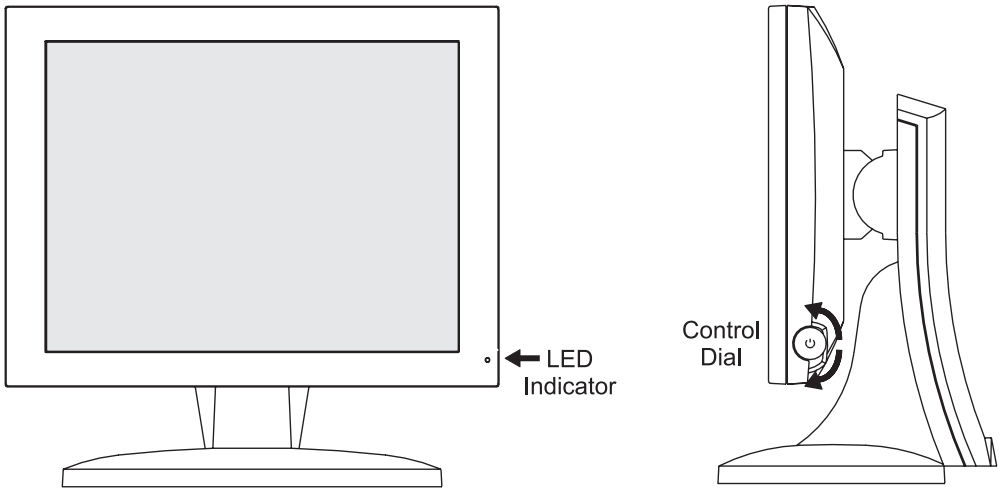

Control Dial

The Control Dial is a multi-functional device located behind the LED Indicator on the right side of the front bezel. It has three movements-rotate upward, rotate downward and press inward as a button.

1. **Power On/Off**
   Press the Control Dial to power the unit on from the off stage (the display is off). To turn the power off, press the Control Dial and hold for at least 1 second until the display turns off.

2. **OSD Control**
   While the monitor is on (image on the screen), pressing on the Control Dial activates the OSD. While the OSD menu is active, use the three way movements of the Control Dial to adjust the monitor.

Rotate Downward:	Move Up/Right, Increase, Larger, More
Rotate Upward:	Move Down/Left, Decrease, Smaller, Less
Button Press:	Execute, Do, Save

3. **Change of Brightness Setting**
   If you rotate the Control Dial without first having clicked to enter the OSD, then it will change the brightness setting.

LED Indicator

This LED indicator turns green when the power is switched ON and the power cord is properly attached. It turns amber when the monitor goes into a power saving mode (Active Off).

OSD Adjustment Functions

On-Screen Display (OSD)

The LCD monitor features a On-Screen Display(OSD) menu with easily identifiable icons designed to make adjusting your monitor display settings a more user-friendly process. When highlighted, the icon illustrates the control function and a brief instruction to assist the user in identifying which control needs adjustment.

The OSD menu is activated by pressing the Control Dial inward and you can select and adjust the function of your choice by rotating and clicking the Control Dial. The main menu displays a list of control icons and the current video input mode. Rotate the dial to move the highlights to the control you would like to adjust, then press the Control Dial inward to select that control or to activate that function. Depending on the control you selected, a submenu of the control with a status bar will appear. The status bar indicates in which direction, from the factory preset, your adjustments are being made. Rotate the Control Dial to adjust the control.

When you have finished making the adjustments, the setting is saved automatically by exiting the control function. If you do not touch the control dial for 20 seconds, the OSD is automatically exited saving your current settings.

Menu descriptions

The LCD monitor is capable of accepting digital and analog signal inputs and therefore has two different sets of OSD control functions.

Depending on your input source and also depending on which display mode you have selected there are some functions that are not necessary, cannot be executed or are locked out to comply with certain standards. You will then encounter the message “Not Available” when you try to select such functions.

The following charts show the function tree and brief explanations of the functions.



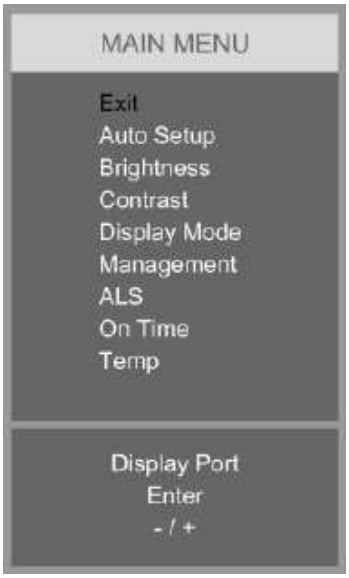

Charts of OSD Adjustment Functions

Info page

Info page 1

Exit	Closes the OSD menu.
Go to OSD	Go to the main menu, see below: ”**Main menu**”
Model:	Displays the monitor’s model name.
Serial Number:	Displays the monitor’s serial number.
FW:	Displays the monitor’s firmware version.
ALS FW:	Displays the monitor’s ALS firmware version.
Resolution:	Displays the monitor’s active Resolution.
Hours used:	Displays the number of hours the monitor’s backlight has been on.
Hours left:	Displays the estimated remaining life time of the monitor’s backlight, for use as a DICOM approved monitor.
Display Mode:	Displays the monitor’s current Display mode.

Main Menu

Exit	Closes the OSD menu, in sub menus this option will take you up in the tree structure.
Auto setup *1	Adjust monitor to analog signal from graphics card. After you have done the correction it will ask you if the image looks OK, if you answer YES then you will exit the menu. If you answer NO, proceed to Clock / Phase menu.
Brightness	Adjust brightness level.
Contrast	Adjust contrast level. Not available in DICOM or Calibration Display mode.
Display mode	Sub menu
Gamma 1.8	Set Gamma curve to curve 1.8
Gamma 2.0	Set Gamma curve to curve 2.0
Gamma 2.2	Set Gamma curve to curve 2.2
Gamma 2.4	Set Gamma curve to curve 2.4
DICOM 350	Special color mode intended for viewing of X-ray pictures. Has a preset greyscale curve in accordance with the DICOM standard. Automatically sets the monitor’s brightness. When set to this mode the OSD functions for Brightness, Contrast are deactivated. It also locks ALS to ON. It has a calibrated luminance of 350 cd/m2
DICOM 450	DICOM display mode with a calibrated luminance of 450 cd/m2.
DICOM 600	DICOM display mode with a calibrated luminance of 600 cd/m2.
DICOM User	Special customized Dicom mode.
Calibration	Special display mode intended for viewing of X-ray pictures. With the software PerfectLum, a calibration curve can be uploaded to the monitor’s internal LUT. Automatically sets the monitor’s brightness. When set to this mode the OSD functions for Brightness, Contrast are deactivated. It also locks ALS to ON.
User	Mode where you can adjust Brightness and Contrast and other settings.

Charts of OSD Adjustment Functions

Main Menu (continued)

Management	Sub menu
Scaling	Scale the image of the input signal to FULL, 5:4, 4:3, 16:9 or 1:1.
OSD Display	Sub menu moving the OSD menu on the display.
OSD H. pos	Move position of the OSD display horizontally.
OSD V. pos	Move position of the OSD display vertically.
Language	Select language for OSD. Returns to Main Menu and will from then on show the OSD in the selected language. You can choose between English, French, German, Spanish or Chinese.
Source	Sub menu for choosing the input source you want to display.
VGA	Displays the device connected to VGA.
DVI	Displays the device connected to DVI.
DisplayPort	Displays the device connected to DisplayPort.
Recall	If you execute Recall the monitor will be reset to values that are default values at time of delivery.
ALS	Set Automatic Luminance Stabilization ON or OFF.
On time	Displays the time the monitor's backlight has been on since it last started.
Temp	Displays the monitor's temperature.

*1 Only available when VGA input source is active.

Applicable Signal Timings

The display may not work correctly with timings other than listed below.

◎ : Recommended timing ○ : Applied timing Δ : Pseudo-display timing

Display mode	Resolution		Frequency		19"
	Horizontal	Vertical	Horizontal (kHz)	Vertical (Hz)	
VGA	720	400	31.5	70	○
	640	480	31.5	60	○
VESA	640	480	37.9	72	○
	640	480	37.5	75	○
	640	480	43.3	85	○
	800	600	35.1	56	○
	800	600	37.9	60	○
	800	600	48.1	72	○
	800	600	46.9	75	○
	800	600	53.7	85	○
	1024	768	48.4	60	○
	1024	768	56.5	70	○
	1024	768	60.0	75	○
	1024	768	68.7	85	○
	1280	1024	64.0	60	◎
	1280	1024	80.0	75	○
	1600	1200	75.0	60	Δ

Caution

The display mode, and UXGA 1600*1200, is a downscaled Pseudo-display.

Specifications

MM191D, 19” Monochrome LCD Display

Display	Screen size, Format	19”	
	Brightness, candela/m2	1300	
	Contrast	1400:1	
	Resolution, Megapixel	1280x1024, 1.3 MP	
	Response time	15 ms	
	Viewing angles, H/V	170 / 170	
	Color depth	Monochrome	
	Panel type	IPS	
	Backlight type	LED	
Environmental		**Operating**	**Storage**
	Temperature, Celcius	0 to 40 C	-20 to 40 C
	Humidity (non-condensation)	20 to 90 %	10 to 90 %
Input signal	Connections	DVI (this is recommended), VGA, DisplayPort	
	DDC	DDC-2B	
Power	Power supply	Internal AC 110 - 240V	
	Power consumption	<50W (<5W in stand-by)	
Functionality	Automatic adjustment	Yes, via OSD	
	OSD for settings	Yes	
	Luminance stabilization	Automatic Luminance Stabilization	
	Pivot	Yes, if graphics card supports it	
	Protective glass	No	
	Product color	White or Graphite grey	
	Internal LUT	Gamma 1.8 - 2.4	
	Internal LUT for calibration	Yes	
	DICOM pt. 14 presets	350 cd/m2, 450 cd/m2, 650 cd/m2 and User defined	
International standards	Medical certificates	CE(EN60601-1, EN60601-1-2), RoHS	
Warranty	Replacement warranty	Two (2) years	

Specifications

Appearance

Appearance	Net. weight	5.6 kg
	Measurements (WxHxD)	432 x 353 x 75 mm
Base unit	Height adjustable	Yes
	Tilting and swivel	Yes
Mounting	Kensington lock	Yes
	VESA standard	100 x 100 mm

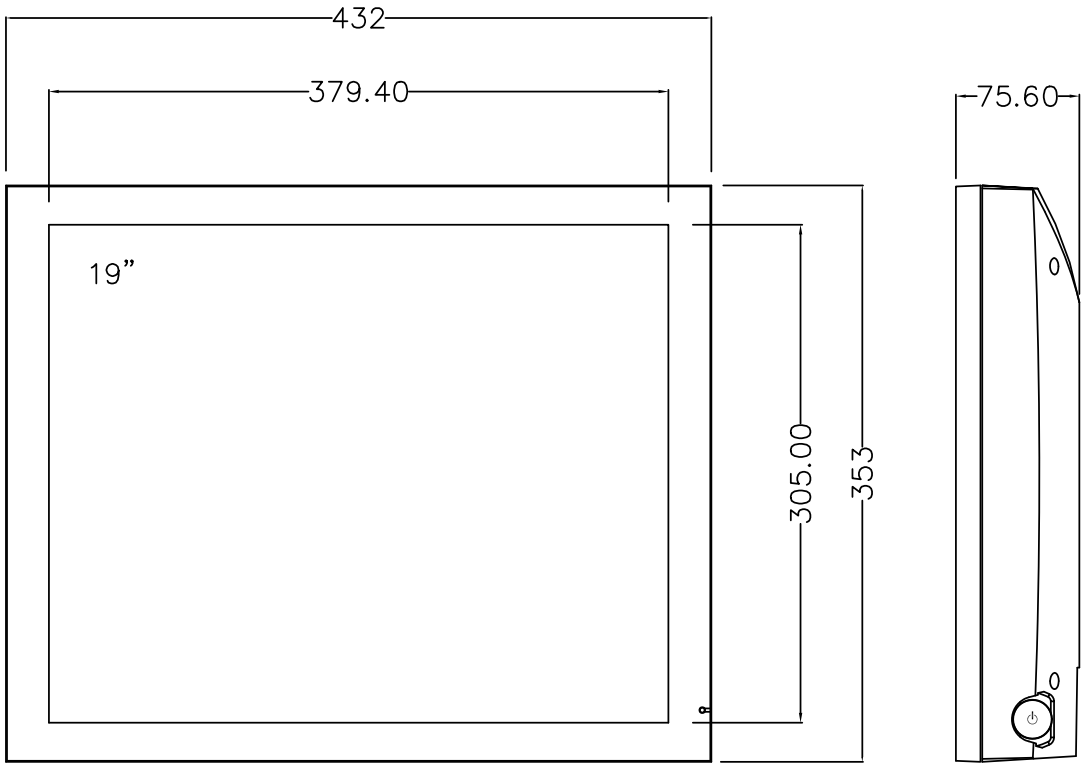

Special Considerations for LCD Panels

Manufacturing of LCD panels is very delicate with large panel elements being manufactured in one unit and then cut to smaller sizes to be used in different products. In addition a panel consists of several layers of components (back-light lamps, diffusers, electronics and color filters). There are different technologies used with each having its advantages and disadvantages resulting in end user products with different specifications even when taken from the same manufacturing batch. Below are explanations to some observations that can be made and which are not considered defects since they are merely problems inherent in the technology of LCD monitors. Over time, the performance of the panel will also change. Some of the information below refers to color monitors only.

Native resolution

All panels have a fixed number of pixels in both horizontal and vertical directions. For instance is a 19” panel normally built with 1280 pixels horizontal and 1024 vertical giving a native resolution of 1280x1024. At this resolution you will get the sharpest picture and it is therefore recommended that you use the native resolution. Thru scaling technologies it is possible to use other resolutions but the picture will be less sharp. Some text will appear to have shadows.

Native color temperature

Most commonly LCD panels are manufactured to have a color temperature of 6500K (Kelvin degrees) for full white picture. The color temperature can vary with shade of grey being showed. For instance it could be 7500K at 50% grey and more than 9000 at 90% grey. For an individual panel the color temperature at full white can also vary by +/- 15%. Inside the panel there is a color filter and over time this will age and become more yellow in its color tone. Therefore, over time, the color temperature will gradually go lower so that at full white it could come down to 5000K.

Typical values

In product specifications there are values for brightness, contrast, view angles etc. The values are given as “typical values” meaning that actual value for any given product can vary by up to 20% from this value. For instance, a product specified to give 300 candela as typical maximum value for brightness may for individual samples vary from 240 candela to 360 candela. The values specified are for a new product. Due to wear of the backlight lamps the values will change over time and gradually become lower.

Uniformity and Mura patterns

Depending on the placement of the backlight lamps, how many they are and the size of the panel the brightness over the entire panel will vary by up to 20%. Generally the highest brightness is in the centre of the panel and becoming gradually lower towards the outer edges. This does not follow a linear curve and there might also be “areas” on the screen where there is a noticeable difference in the uniformity. Such clouded areas are referred to as “Mura” and are more related to the panel itself than to the backlight. These Mura patterns are different in size and shape and are color and grayscale dependent since they are a result from deterioration of the liquid crystal alignment layer. Mura is most commonly caused by long term operation under high ambient temperature and is a phenomenon that cannot be repaired.

Non-performing pixels

Each pixel on the panel actually consists of 3 sub-pixels (one for each of Red, Green and Blue). A 19” panel with 1280x1024 therefore has almost 4 million sub-pixels. It can happen that a pixel can get stuck in ON status (bright pixel defect) or in OFF status (dead pixel defect) or in an in-between status (low bright pixel defect). Usually such defects only affect a sub-pixel and not an entire pixel. The defect can therefore only be seen at certain color settings. The ISO 13406-2 standard specifies how many pixel defects that are acceptable before an entire panel will be considered faulty.

Special Considerations for LCD Panels

Olorin products are warranted to follow this standard as a Class II product.

Image sticking

If the same image is shown for a long period of time there is a risk for “image sticking”. This is a result of that the thin film transistors will get stuck in a certain position and continue to show that image even when a new image is sent to the panel. The image will disappear if you put a full white picture on the monitor for several hours. The best solution is to have a screen saver that moves around on the screen so that no static image is constantly shown.

Slow operating in cold environments

The thin film transistors contain some liquid that will cause them to operate slowly in cold temperatures. When temperature inside the panel has increased to normal room temperature, the speed will be up to normal again.

Cable length and input signal

When using long cables from the video source (PC, camera etc) to the monitor the signal level will be lower and cause distortions in the picture shown. A low quality graphic board could also cause such problems. Always use high quality graphic boards and signal cables.

Longer life for your monitor

The components that have biggest influence on the useful life of the product are the backlight lamps. These are made of CCFL (Cold-cathode Fluorescent Lamp) or LED (Light Emitting Diode). Over time these will decay and give less and less light. They generally have a spedification of 40,000 hours before they are worn out. If they are constantly on one year of use corresponds to just over 8,000 hours and thus a life of 5 years.

There are ways to improve the useful life.

The most radical and efficient way is to always switch the monitor off when not used.

The second best is to use the Power Save feature within the PC´s DPMA system. This will not switch off the monitor entirely but the backlight lamps will be switched off which is the important thing. When you start to use the keyboard or mouse, the monitor will be switched on within a couple of seconds.

PLEASE, NOTE THAT A SCREENSAVER WILL NOT SWITCH OFF THE BACKLIGHT LAMPS AND THUS IS NOT A SOLUTION FOR LONGER LIFE.

The higher the luminance is set on the monitor the greater is the wear of the backlight lamps. All monitors have the facility to adjust brightness. Never set this at maximum since this will cause the lamps to decay faster. A setting at 50% will be sufficient for use in office environment.

Gradual change of color

If the backlight is a CCFL type, as the lamps ages they will show a warmer color temperature which can be perceived as more yellow for white color than it was initially when the monitor was new. There are color filters in the panel which also will age and add to the yellowish color tone.

You can usually from the monitors OSD set your own color and by setting the value for blue higher than red and green will change the color temperature back to more normal. However, the blue color filter has lower translucence so the consequence is that you will get a lower brightness.

Troubleshooting

Start your trouble shooting with the following actions

Possible power problem

- Make sure power is connected. If you switch the monitor off and then back on, the diode on the front should show green light. Some models have a main power switch next to the power inlet check that this is set to on. If you have a model **without power** adapter and still the no green light it's not a power problem.
  - If **not**, check your power connection to the 12V/24V adapter and to the wall. There is a similar diode on the 12V/24V adapter that should show green light.
    - If **not**, the adapter might be broken. If you have another adapter of the same type you can verify by using that adapter.
    - If **yes**, there is a problem with the panel which should be repaired
  - If **yes**, then it is not a power problem

Possible signal problem

- If picture is not stable or not shown at all or you get "No Sync" then check connection of the signal cable and graphic board settings.
- If cable connections and graphic board settings are OK, then try the following
  - Switch monitor off. Wait 10 seconds and switch it back on
  - Re-boot the PC
  - Test monitor by connecting it to another PC
- If nothing of this helps, then there is something wrong with the monitor and it should be repaired. Contact your local reseller for assistance.

Monitor shows incorrect resolution

If during boot-up of the PC or coming back from sleep-mode the monitors shows an incorrect resolution then this problem can be resolved by

- Remove monitor power cord from the wall outlet
- Wait 15 seconds
- Re-insert the power cord into the wall outlet

DDC *1

This unit conforms with DDC-2B and VESA *2 standards.

The DDC function is located in 15-pin D-sub connector and 24-pin DVI-D connector. This function reads into the set data written in the color LCD display internal device in advance on start-up of Windows®/98/Me/2000 or Windows®XP and sets the detailed information of the color LCD display in the system file in order to achieve Plug & Play.

Data reading from the color LCD display is done through a video signal cable, which needs to be connected when Windows®95/98/Me/2000 or Windows®XP is on.

**1 DDC (Display Data channel) and *2 VESA are registered trademarks of Video Electronics Standards Association.*

Power management

This unit conforms to the DPMS standard (Display Power Management Signaling).

Kensington Anti-Theft Security Lock Slot

The LCD monitor is equipped with a security lock slot compatible to Kensington® security lock type. The security cable lock maybe available thru your dealer or it can be purchased at most computer peripheral stores near you.

Contact

Olorin AB
Marios gata 11
SE 434 37 Kungsbacka
Sweden

Phone: +46 (0)300 566 780

E-mail: info@olorin.com

www.olorin.com

OLORIN
User's Manual
3MD231PR010