PRELIMINARY

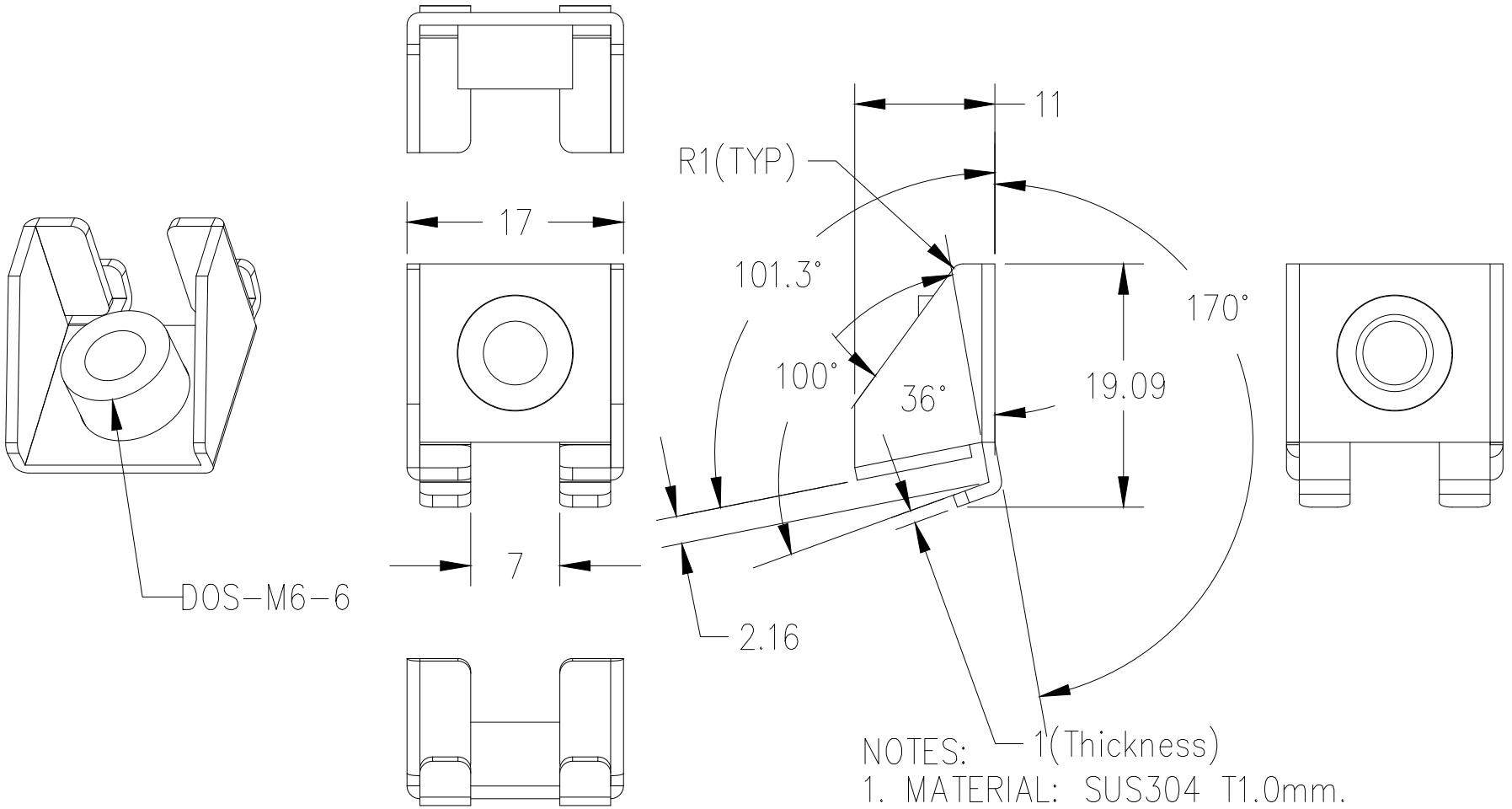

NOTES:
1. MATERIAL: SUS304 T1.0mm.
2. ALL EDGE BURRS FREE.
3. GENERAL TOLERANCE: ±0.2mm ±1°.

				DATE	2023/02/02	Title	CLAMPER_1
				DRAWN	Vincent	DWG No.	
				CHECK		Unit	mm REV
AUTH	DESCRIPTION	DATE	APPROVED	APPROVE		Scale	2.000
REVISIONS						Sheet	1 of 1

DATA IMAGE