18.5V~30.5V

POWER JACK P101

F101 3A/F1206

L101 Common Choke/NC

L102 Common Choke

U101 RT8279

U102 RT8279

Vout=1.222(1+R1/R2)

Vout=1.222(1+R1/R2)

U104 AZ1117CH-ADJ

Vout=1.25(1+R2/R1)~=5V

U105 AP2114H-1.2TRG1

SM4305PSKC-TRG

SYSTEM +3.3V LED

BADGE +5V LED

板內光學點

鈺緯機密文件
不得複製引用
DIVA Confidential
NO Copy/Reproduction Allowed
鈺緯科技開發股份有限公司
DIVA LABORATORIES, LTD.

Title	Philips Ultrasound EPIQ		
Size Custom	Document Number 3PD539F011B		Rev B
Date:	Tuesday, March 16, 2021	Sheet 1 of 13	

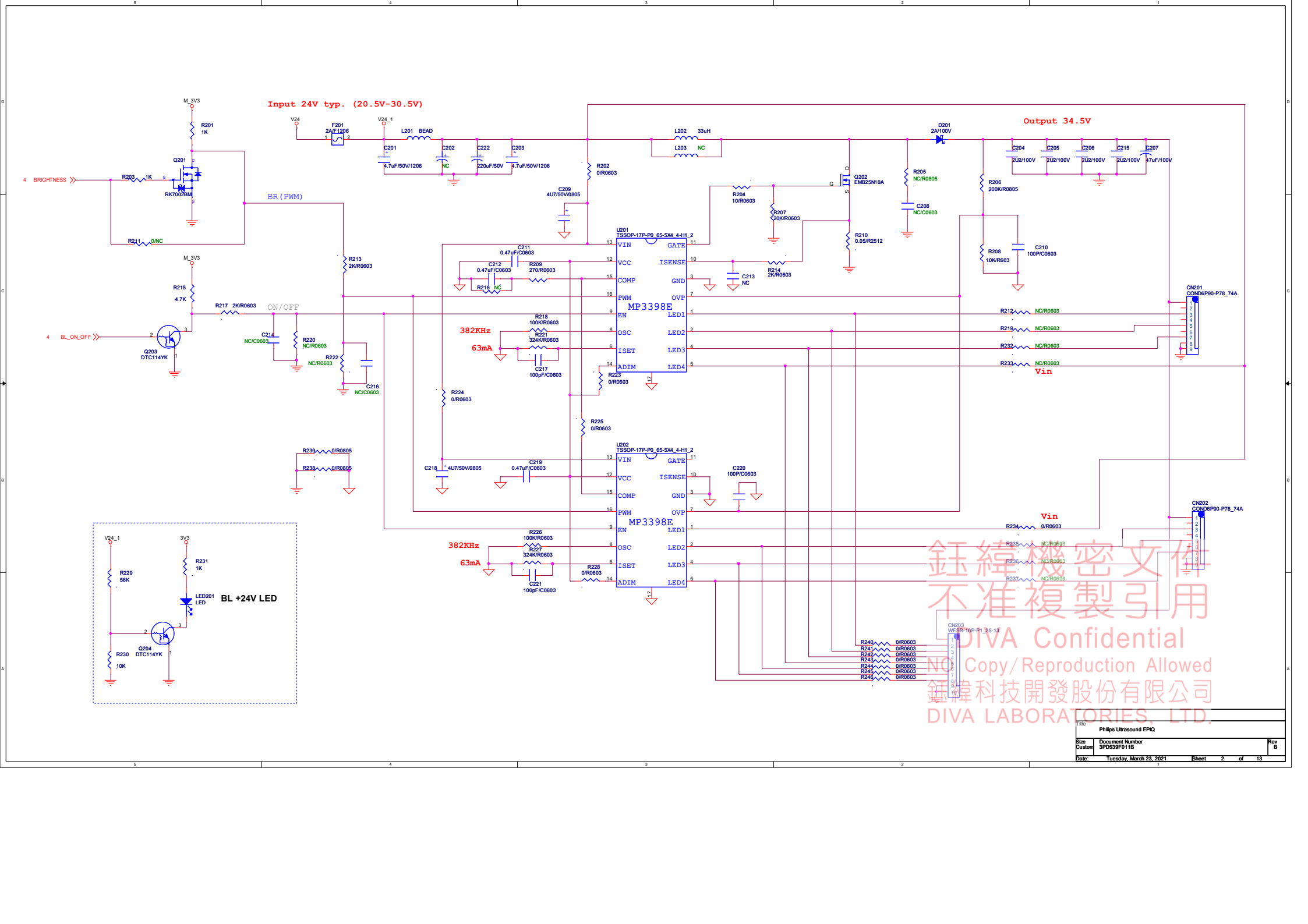

鈺緯機密文件
不准複製引用
DIVA Confidential
NO Copy/Reproduction Allowed
鈺緯科技開發股份有限公司
DIVA LABORATORIES, LTD.

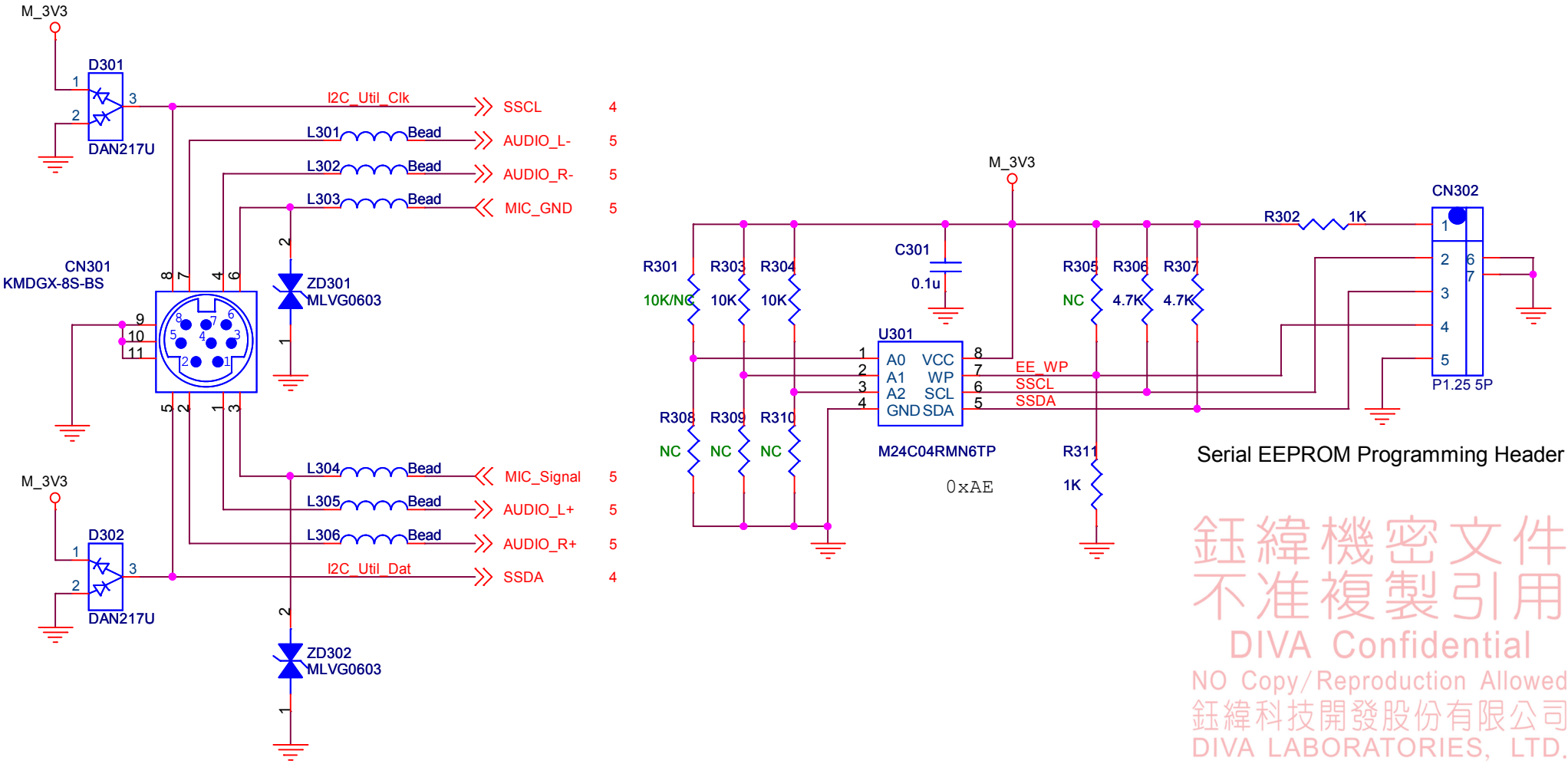

鈺緯機密文件
不准複製引用
DIVA Confidential
NO Copy/Reproduction Allowed
鈺緯科技開發股份有限公司
DIVA LABORATORIES, LTD.

Title	Philips Ultrasound EPIQ		
Size A	Document Number 3PD539F011B		Rev B
Date:	Tuesday, March 16, 2021	Sheet 3 of 13	

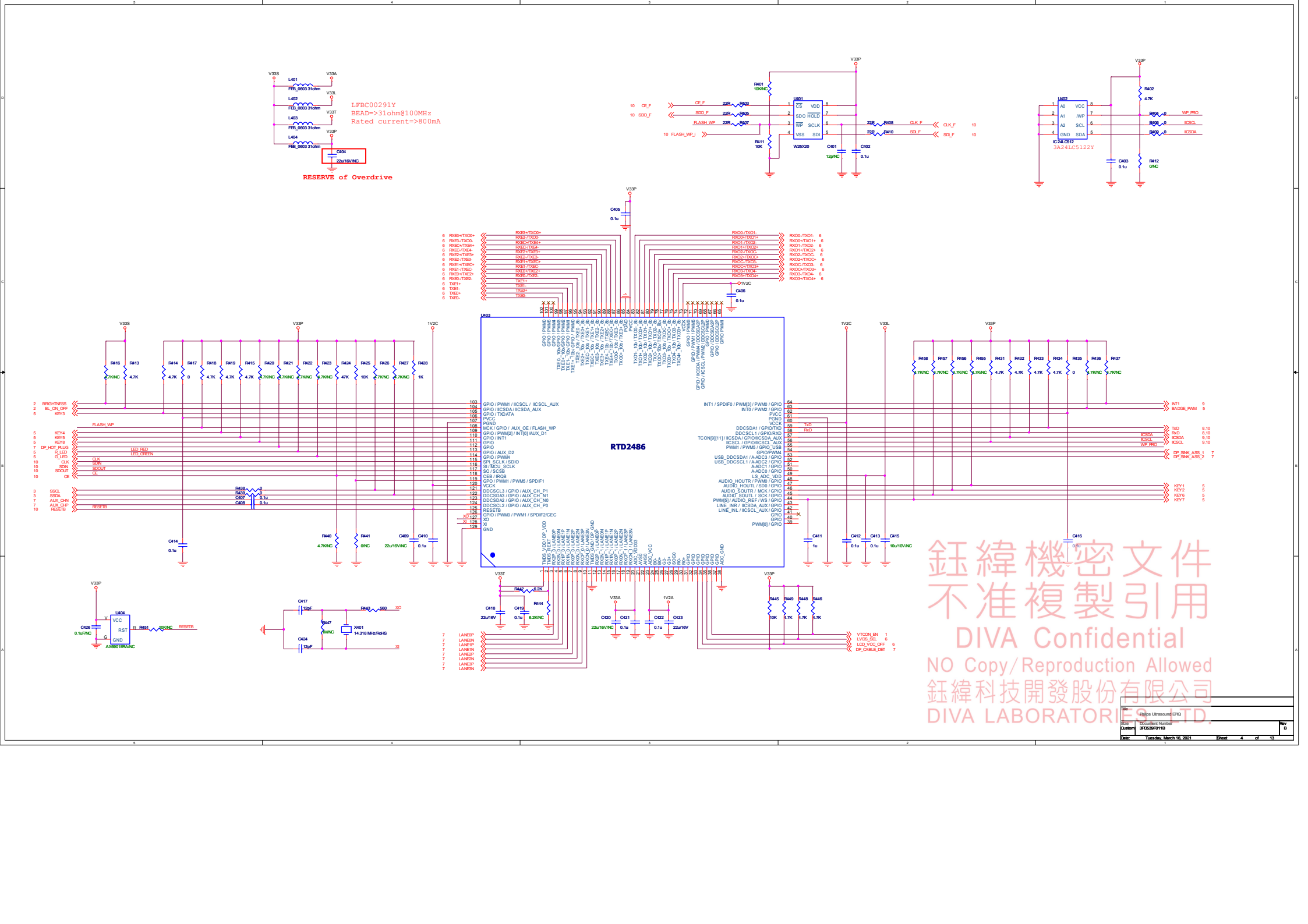
LFBC00291Y
BEAD=>31ohm@100MHz
Rated current=>800mA
RESERVE of Overdrive
RTD2486
3A24LC5122Y
鈺緯機密文件
不准複製引用
DIVA Confidential
NO Copy/Reproduction Allowed
鈺緯科技開發股份有限公司
DIVA LABORATORIES LTD.
Philips Ultrasound EPIQ
3FD539F011B
Tuesday, March 16, 2021
Sheet 4 of 13

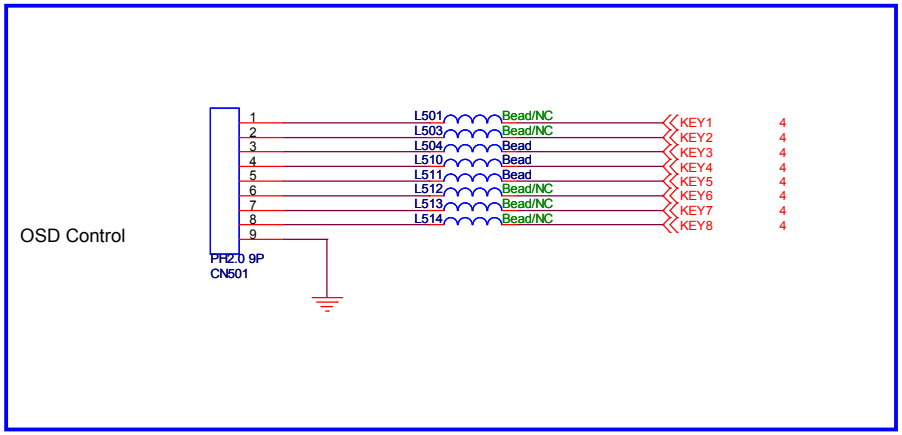

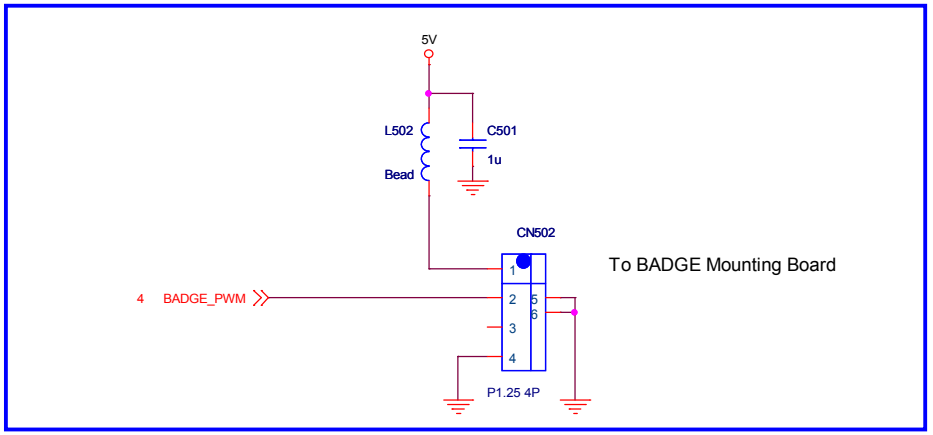

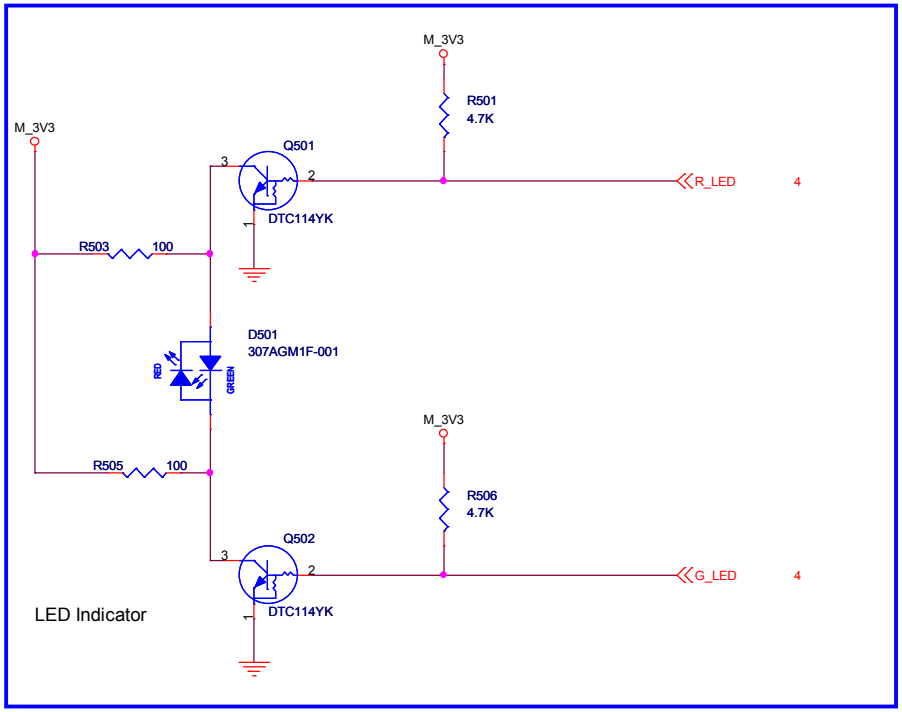

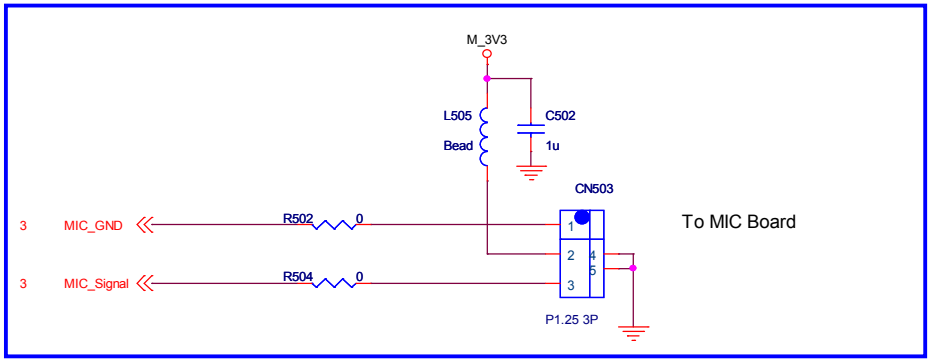

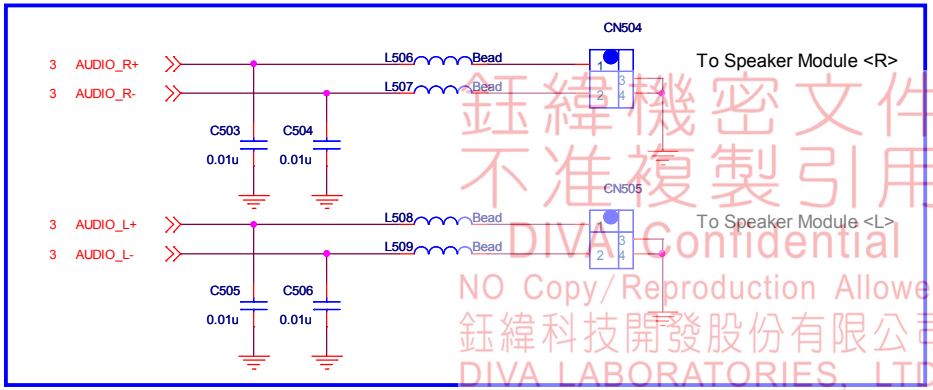

鈺緯機密文件
不准複製引用
DIVA Confidential
NO Copy/Reproduction Allowed
鈺緯科技開發股份有限公司
DIVA LABORATORIES, LTD.

Title	Philips Ultrasound EPIQ		
Size B	Document Number 3PD539F011B		Rev B
Date: Tuesday, March 16, 2021		Sheet 5 of 13	

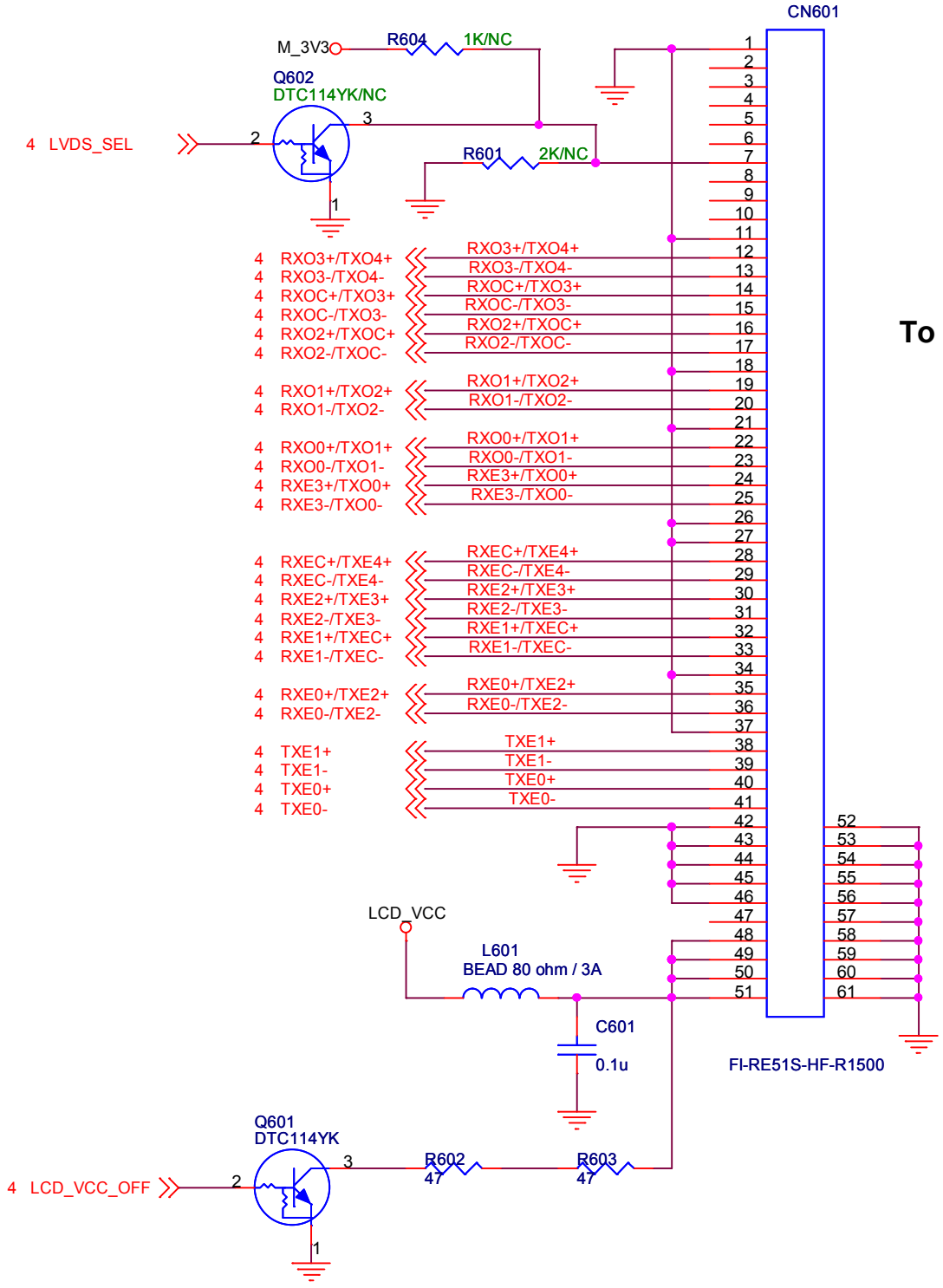

To Panel VVX24F159H00

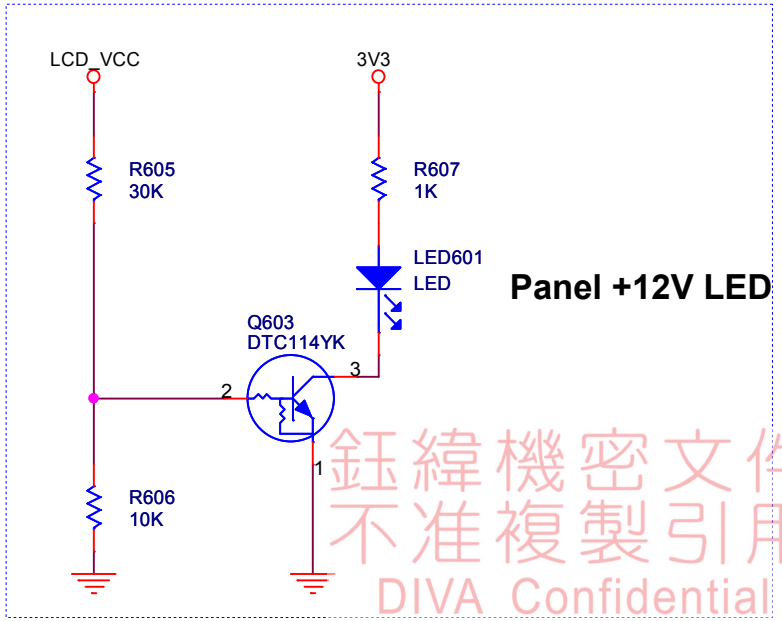

Panel +12V LED

鈺緯機密文件
不准複製引用
DIVA Confidential
NO Copy/Reproduction Allowed
鈺緯科技開發股份有限公司
DIVA LABORATORIES, LTD.

Title	Philips Ultrasound EPIQ	
Size A	Document Number 3PD539F011B	Rev B
Date: Tuesday, March 16, 2021	Sheet 6 of 13	

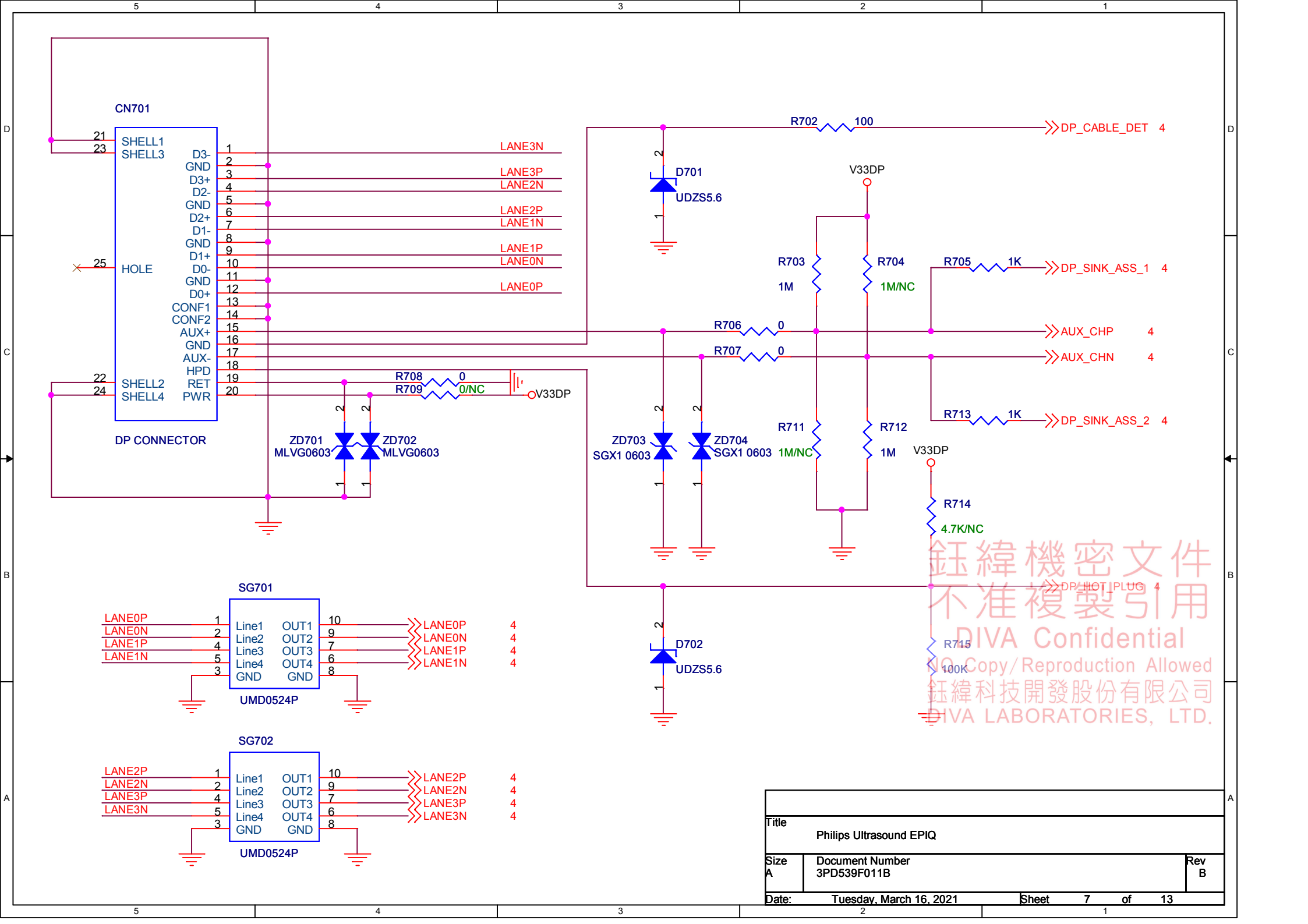

鈺緯機密文件
不准複製引用
DIVA Confidential
NO Copy/Reproduction Allowed
鈺緯科技開發股份有限公司
DIVA LABORATORIES, LTD.

Title	Philips Ultrasound EPIQ	
Size A	Document Number 3PD539F011B	Rev B
Date: Tuesday, March 16, 2021	Sheet 7 of 13	

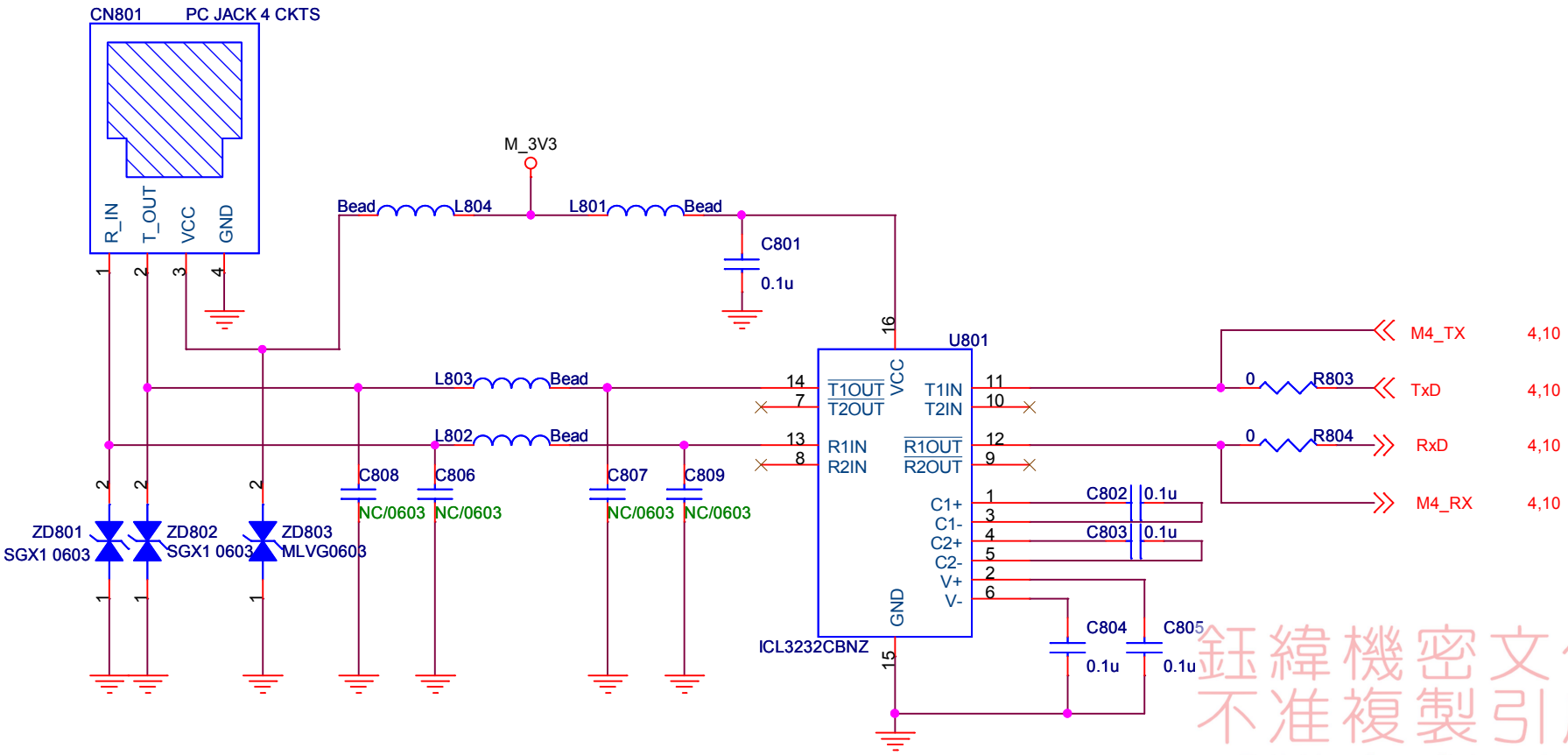

For Debug Port

鈺緯機密文件
不准複製引用
DIVA Confidential
NO Copy/Reproduction Allowed
鈺緯科技開發股份有限公司
DIVA LABORATORIES, LTD.

Title: Philips Ultrasound EPIQ		
Size: A	Document Number: 3PD539F011B	Rev: B
Date: Tuesday, March 16, 2021	Sheet 8 of 13	

Lamp Sensor

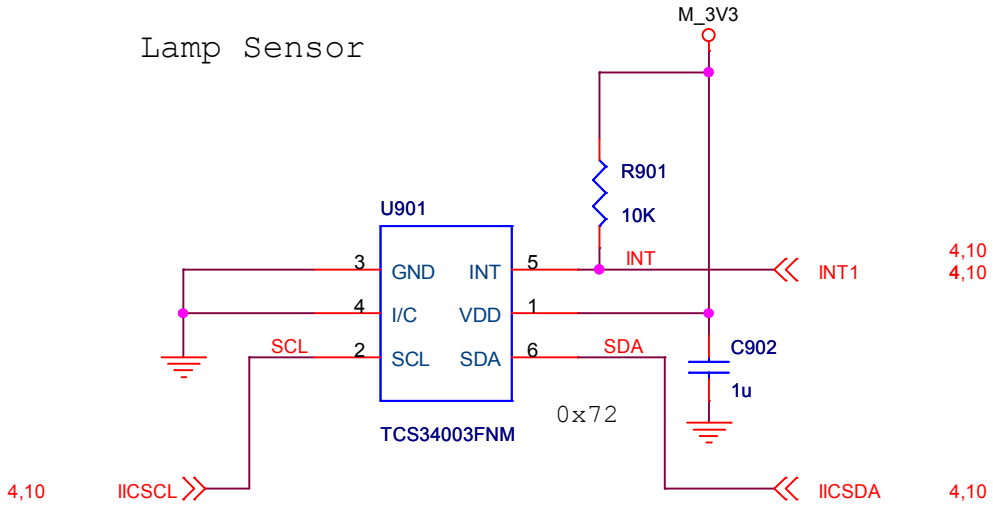

Temp Sensor

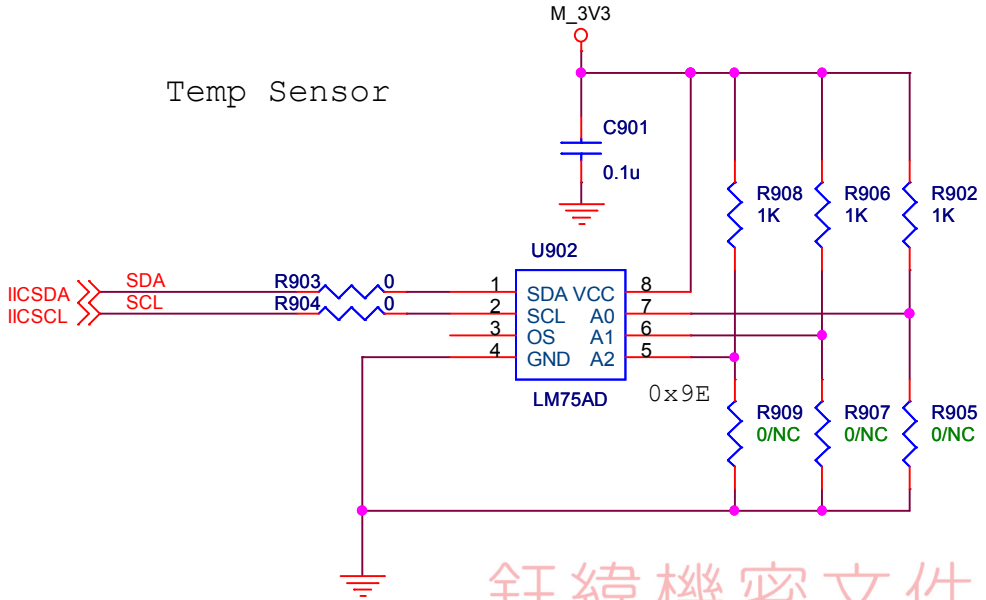

鈺緯機密文件
不准複製引用
DIVA Confidential
NO Copy/Reproduction Allowed
鈺緯科技開發股份有限公司
DIVA LABORATORIES, LTD.

Title: Philips Ultrasound EPIQ		
Size: A	Document Number: 3PD539F011B	Rev: B
Date: Tuesday, March 16, 2021	Sheet 9 of 13	

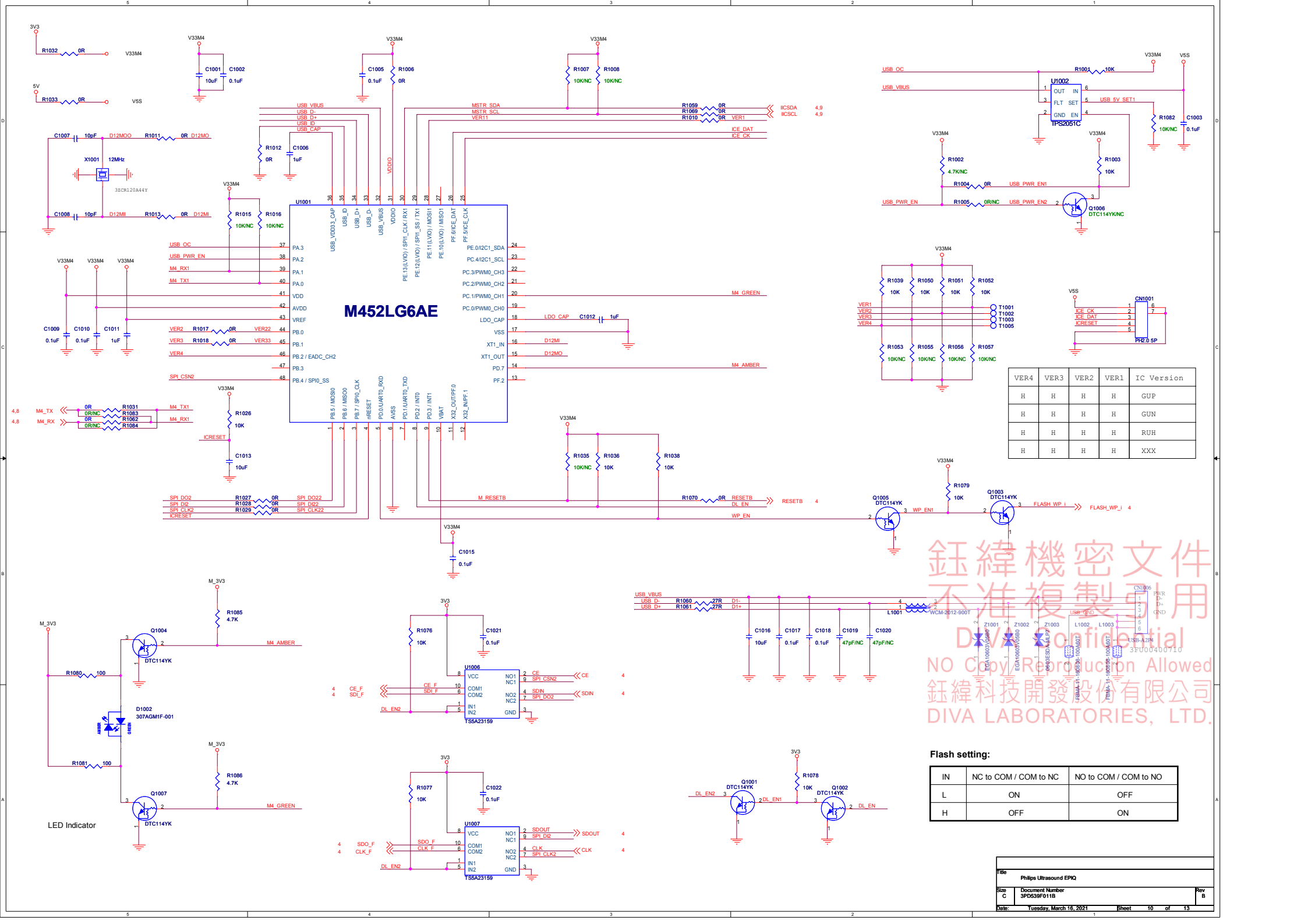

鈺緯機密文件
不准複製引用
DIVA confidential
NO Copy/Reproduction Allowed
鈺緯科技開發股份有限公司
DIVA LABORATORIES, LTD.

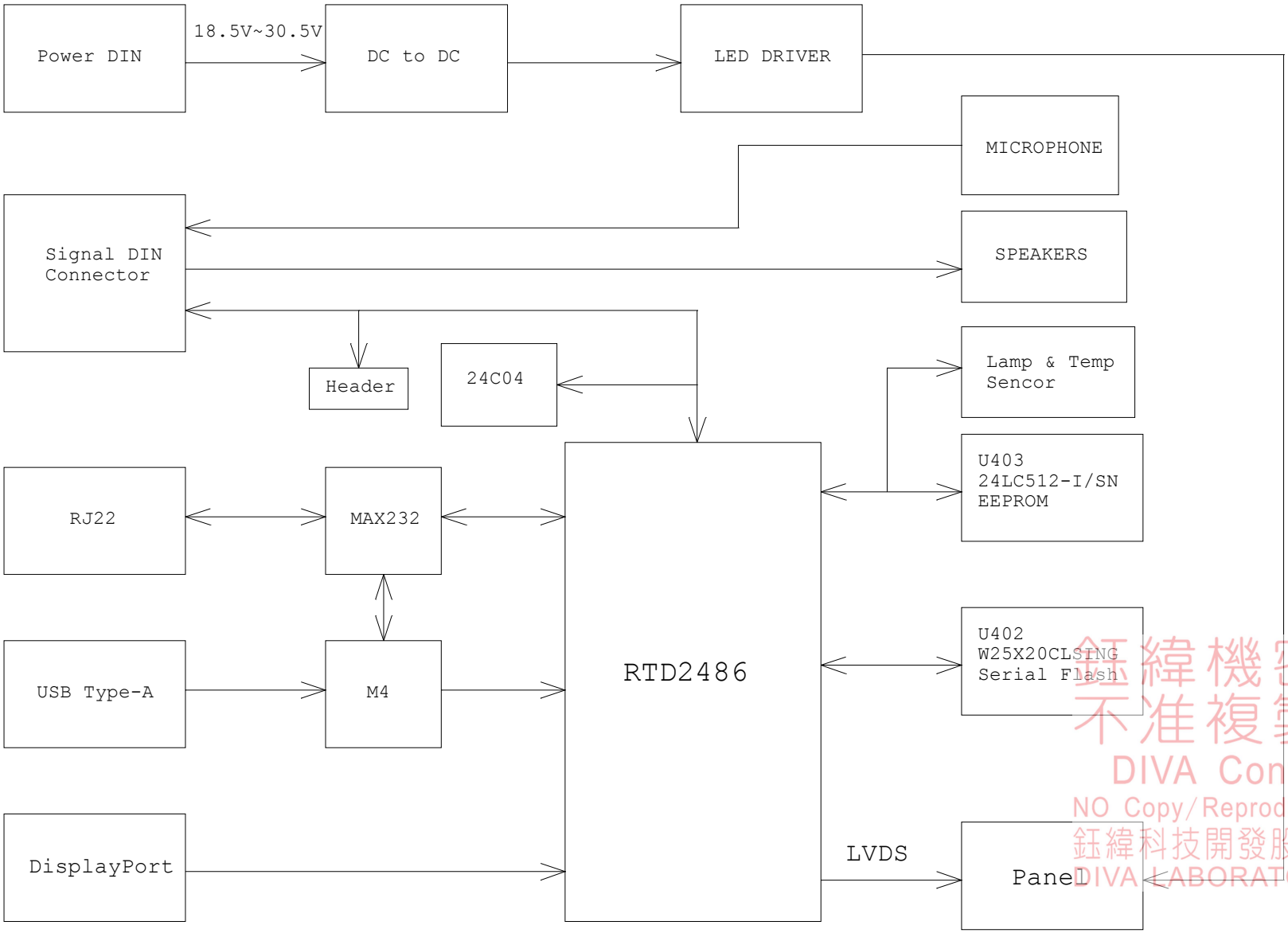

鈺緯機密文件
不准複製引用
DIVA Confidential
NO Copy/Reproduction Allowed
鈺緯科技開發股份有限公司
DIVA LABORATORIES, LTD.

Title	Philips Ultrasound EPIQ	
Size C	Document Number 3PD539F011B	Rev B
Date: Tuesday, March 16, 2021	Sheet 11 of 13	

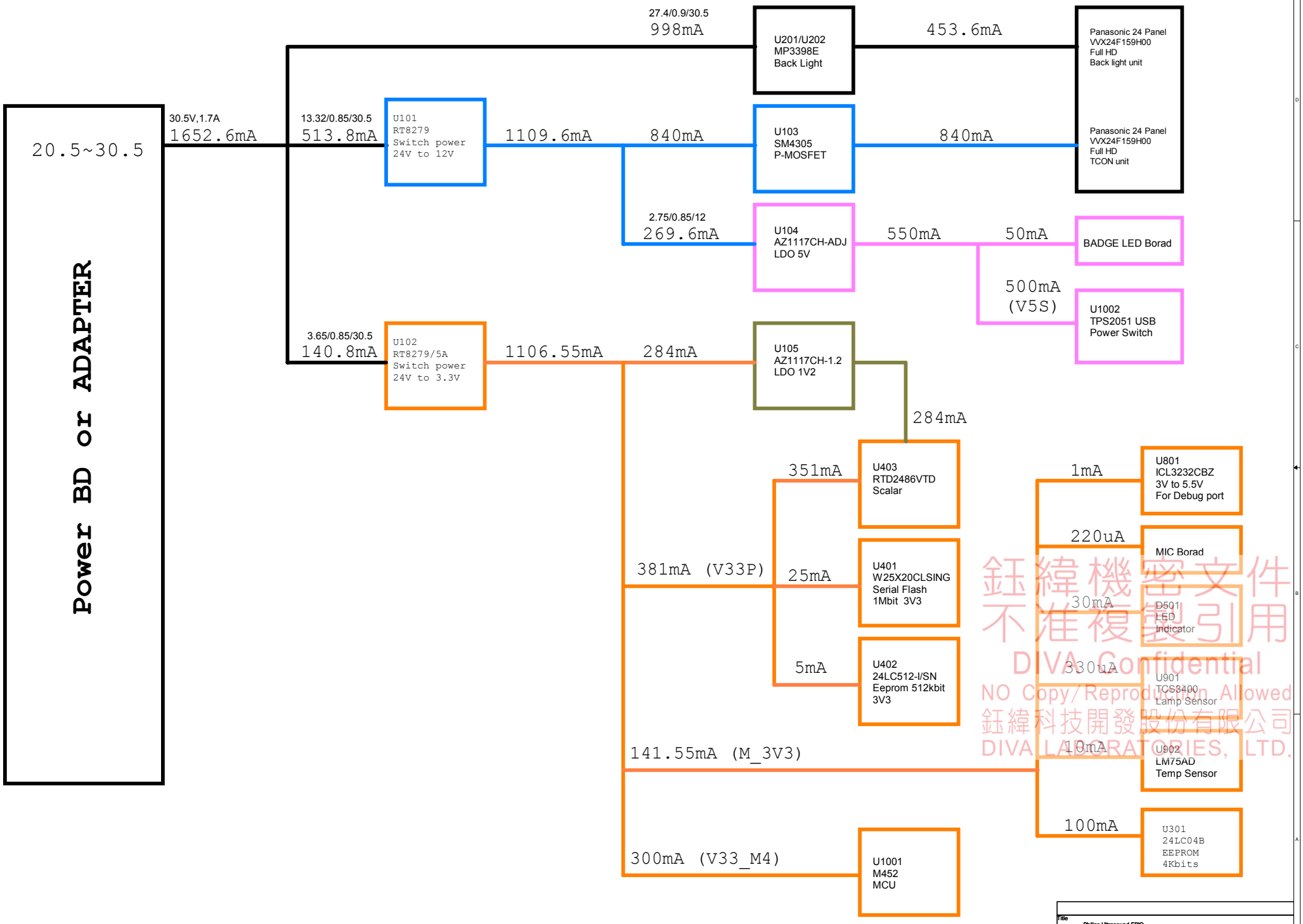

鈺緯機密文件
不准複製引用
DIVA Confidential
NO Copy/Reproduction Allowed
鈺緯科技開發股份有限公司
DIVA LABORATORIES, LTD.

Title	Philips Ultrasound EPIQ		
Size C	Document Number 3PD539F011B		Rev B
Date:	Tuesday, March 16, 2021	Sheet 12 of 13	

Date	Description
20191211	Add C222 220U/50V DIP電容 Change CN1001 為SMD 90度 Add R906、R907、R908、R909 PCB 3PD539F0110 進階 3PD539F011A
20210311	Add CN203 for AUO Panel Add R240 - R246 R221、R227、R206 電阻值修改 PCB 3PD539F011A 進階 3PD539F011B

鈺緯機密文件
不准複製引用
DIVA Confidential
NO Copy/Reproduction Allowed
鈺緯科技開發股份有限公司
DIVA LABORATORIES, LTD.

Title	Philips Ultrasound EPIQ	
Size A	Document Number 3PD539F011B	Rev <B>
Date: Tuesday, March 23, 2021	Sheet 13 of 13	