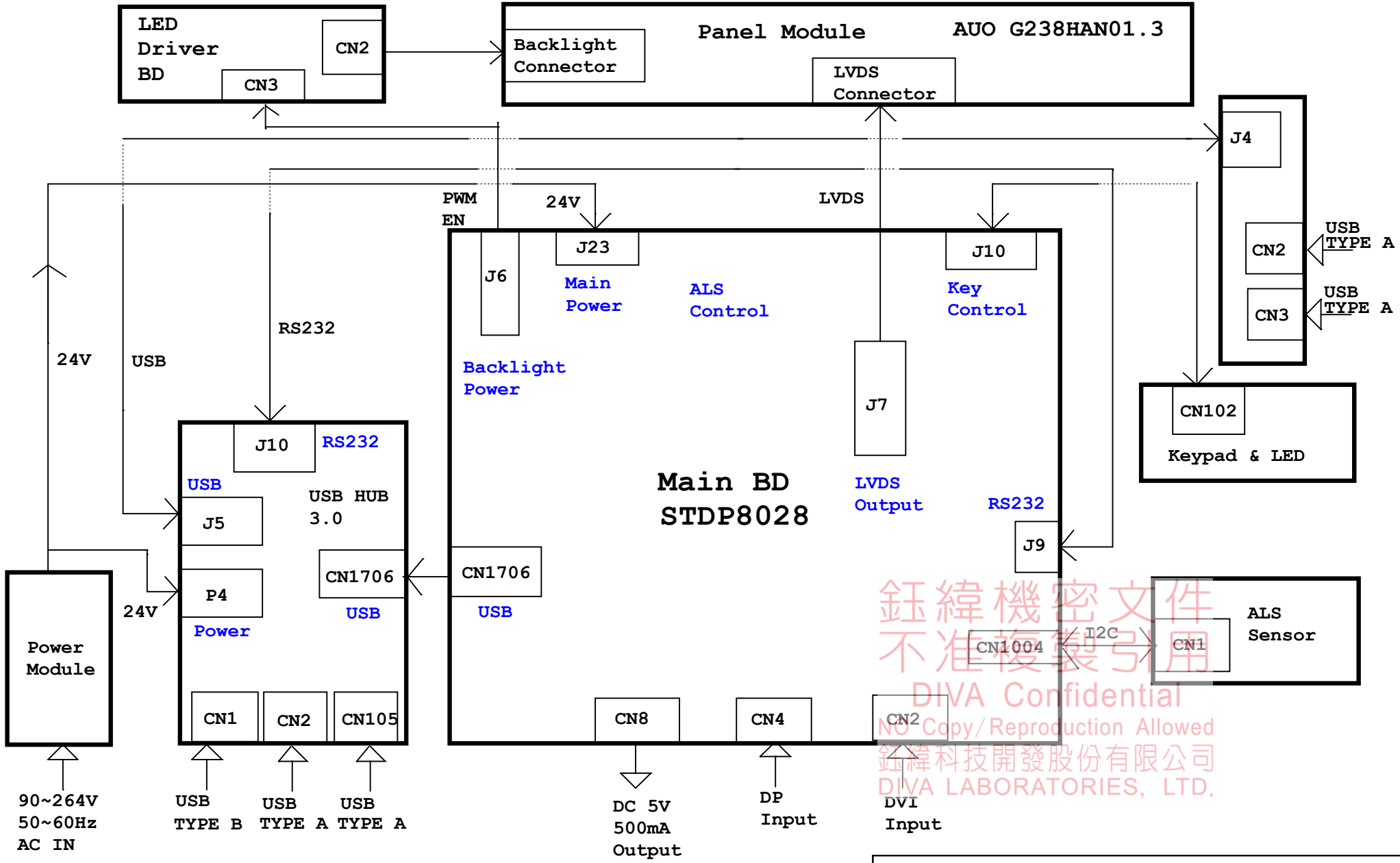

鈺緯機密文件
不准複製引用
DIVA Confidential
No Copy/Reproduction Allowed
鈺緯科技開發股份有限公司
DIVA LABORATORIES, LTD.

Title	Block		
Size A	Document Number 3PD428F031B		Rev 1
Date:	Wednesday, July 24, 2019	Sheet 1 of 16	

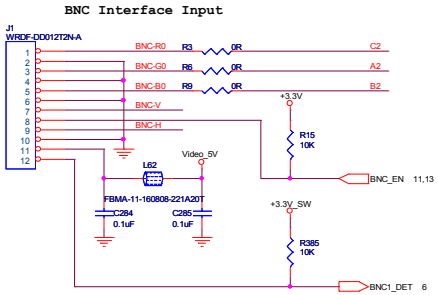

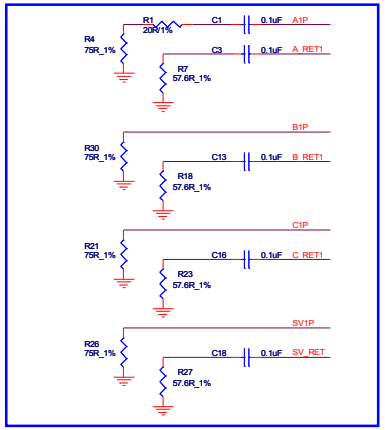

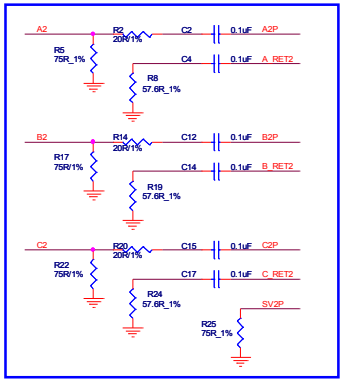

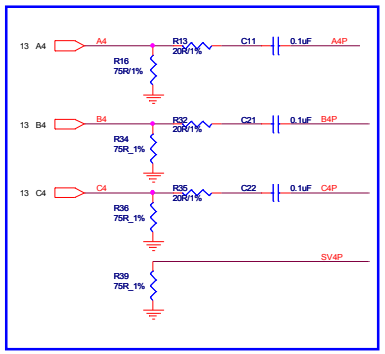

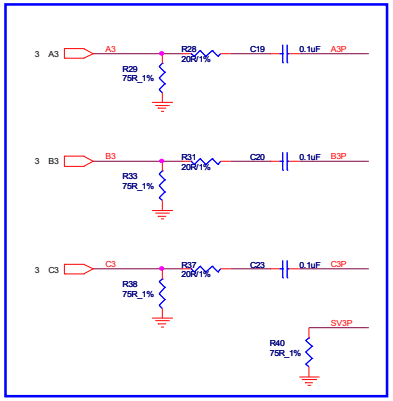

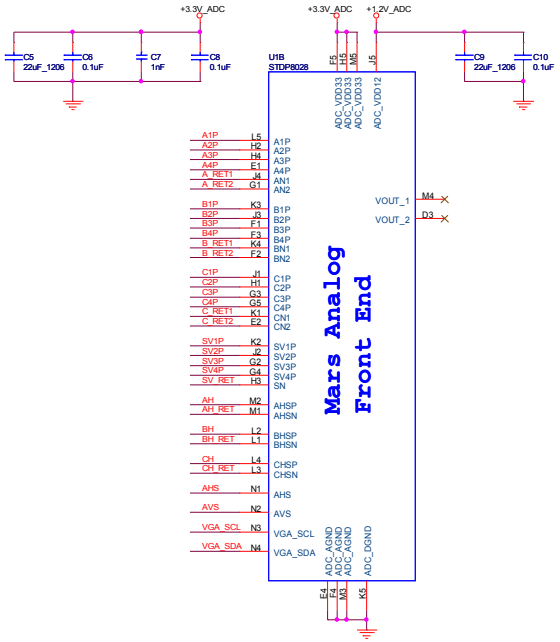

A1	
A2	BNC GREEN
A3	DVI-A GREEN
A4	CVBS
B1	
B2	BNC BLUE
B3	DVI-A BLUE
B4	SVIDEO CHROMA
C1	
C2	BNC RED
C3	DVI-A RED
C4	SVIDEO LUMA
SV1	
SV2	
SV3	
SV4	

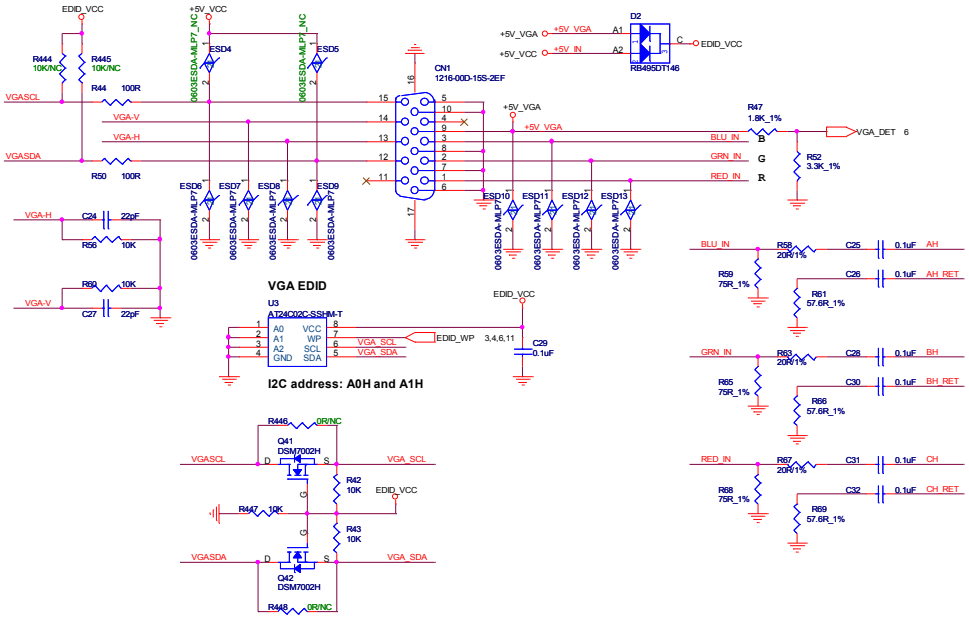

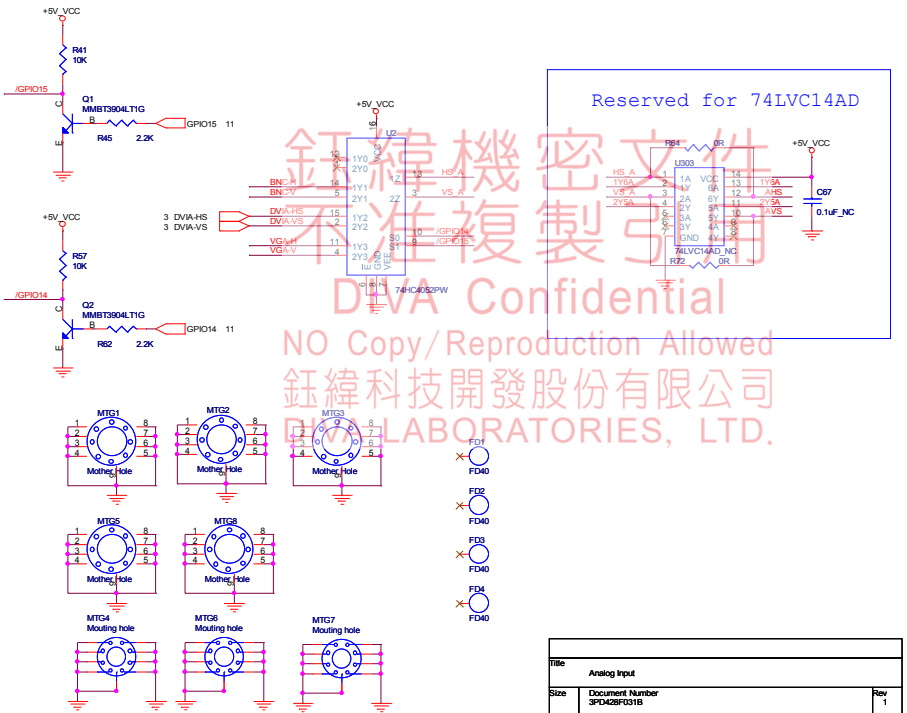

Reserved for 74LVC14AD

鈺緯機密文件
不准複製宣稱
DVA Confidential
NO Copy/Reproduction Allowed
鈺緯科技開發股份有限公司
DVA LABORATORIES, LTD.

Title	Analog Input		
Size	Document Number 3PD426F031B		Rev 1
Date:	Monday, May 20, 2019	Sheet 2 of 16	

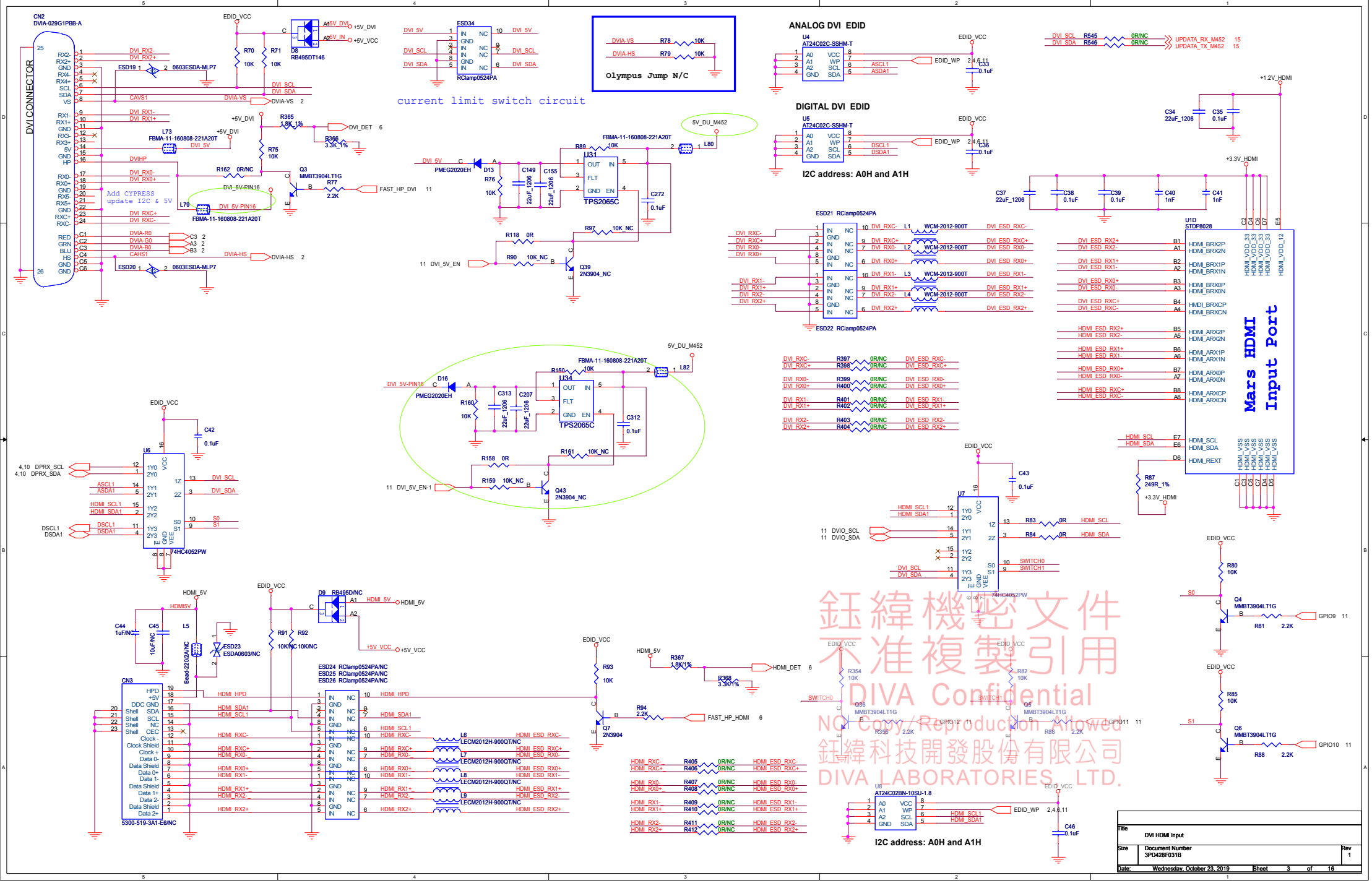

鈺緯機密文件
不准複製引用
DIVA Confidential
NO Copy/Reproduction Allowed
鈺緯科技開發股份有限公司
DIVA LABORATORIES, LTD.

Title	DVI HDMI Input
Size	Document Number 3PD428F031B
Rev	1
Date:	Wednesday, October 23, 2019
Sheet	3 of 16

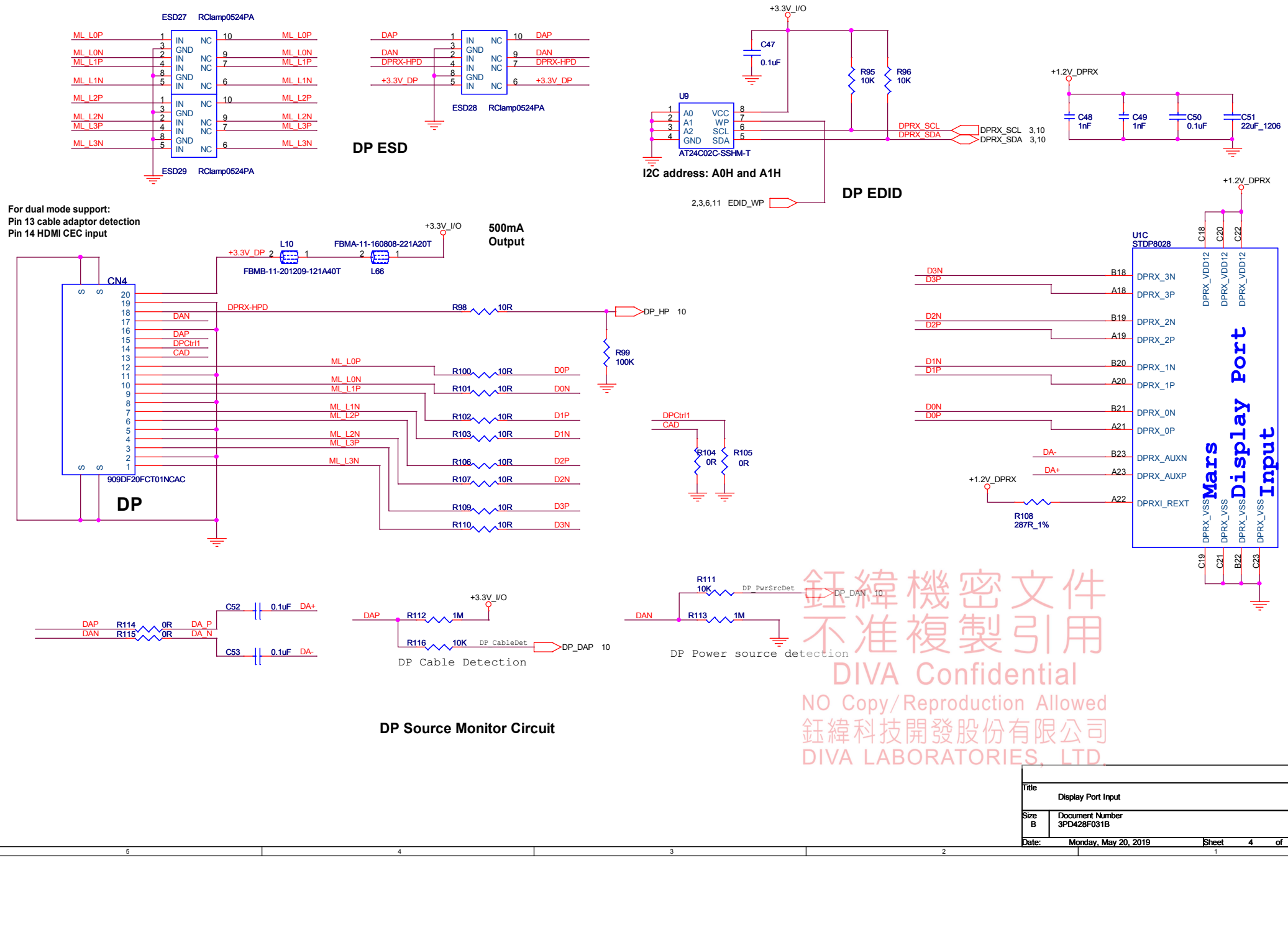

鈺緯機密文件
不准複製引用
DIVA Confidential
NO Copy/Reproduction Allowed
鈺緯科技開發股份有限公司
DIVA LABORATORIES, LTD.

Title	Display Port Input	
Size B	Document Number 3PD428F031B	Rev 1
Date: Monday, May 20, 2019	Sheet 4 of 16	

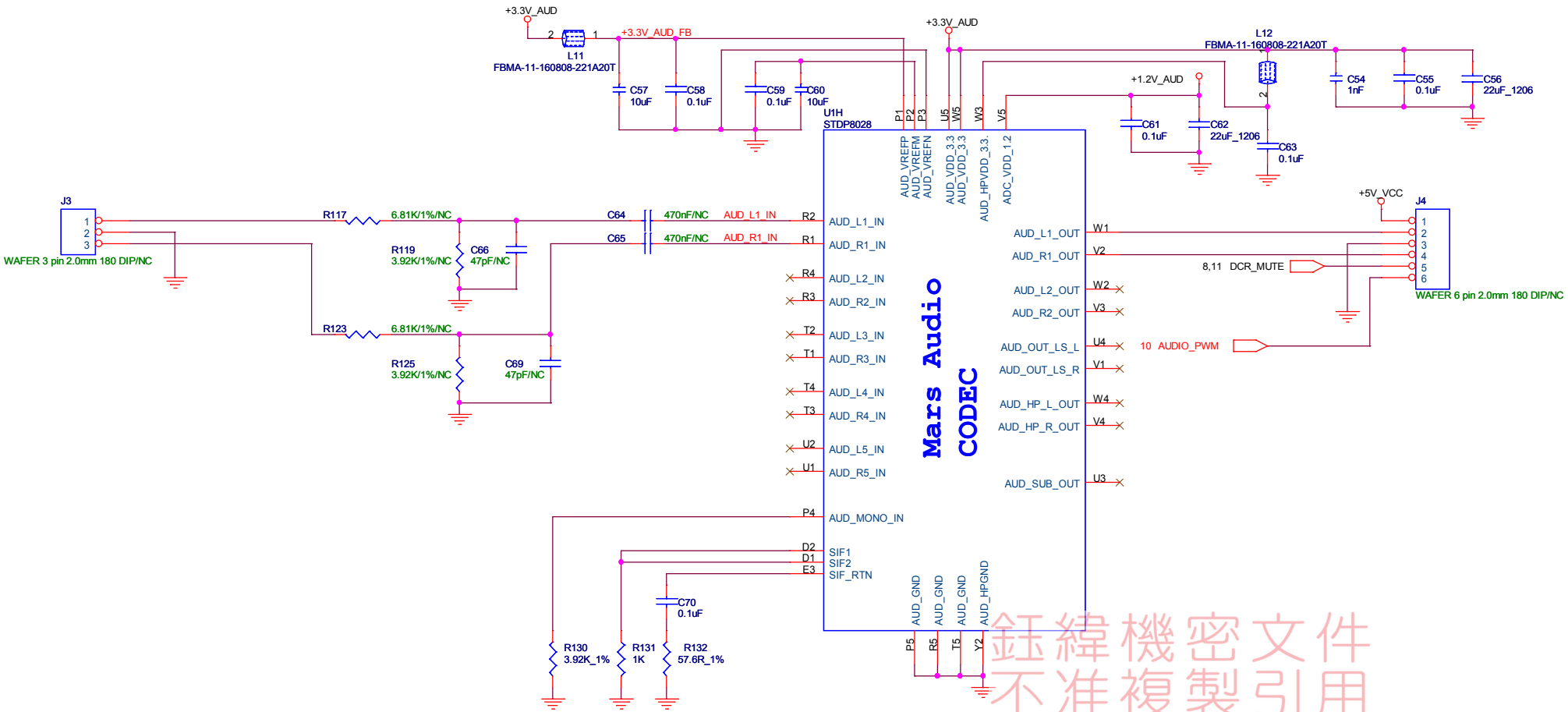

鈺緯機密文件
不准複製引用
DIVA Confidential
NO Copy/Reproduction Allowed
鈺緯科技開發股份有限公司
DIVA LABORATORIES, LTD.

Title: Audio Input		
Size: B	Document Number: 3PD428F031B	Rev: 1
Date: Monday, May 20, 2019	Sheet 5 of 16	

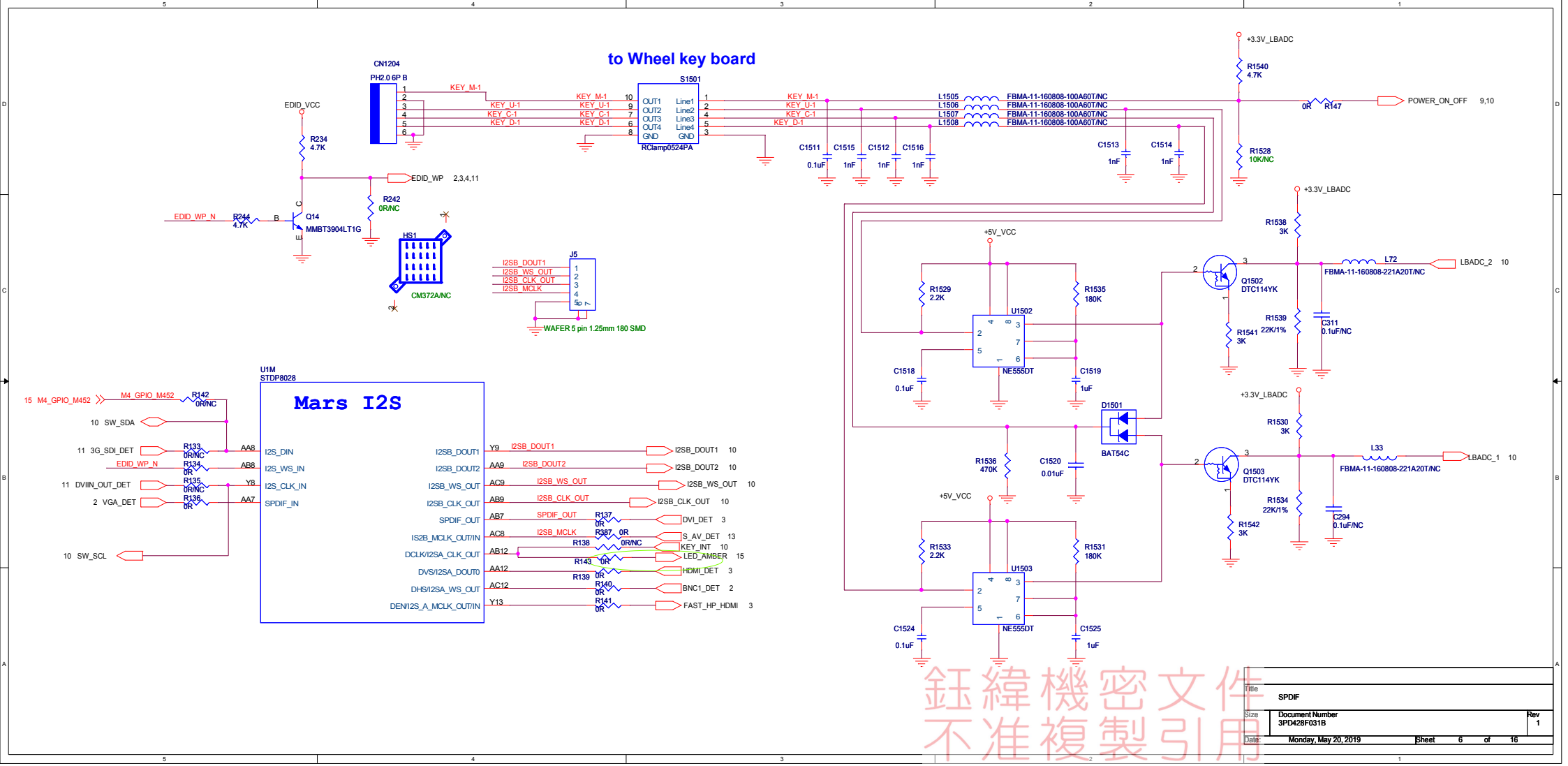

鈺緯機密文件
不准複製引用
DIVA Confidential
NO Copy/Reproduction Allowed
鈺緯科技開發股份有限公司
DIVA LABORATORIES, LTD.

Title	SPDIF		
Size	Document Number 3PD428F031B		Rev 1
Date:	Monday, May 20, 2019	Sheet 6 of 16	

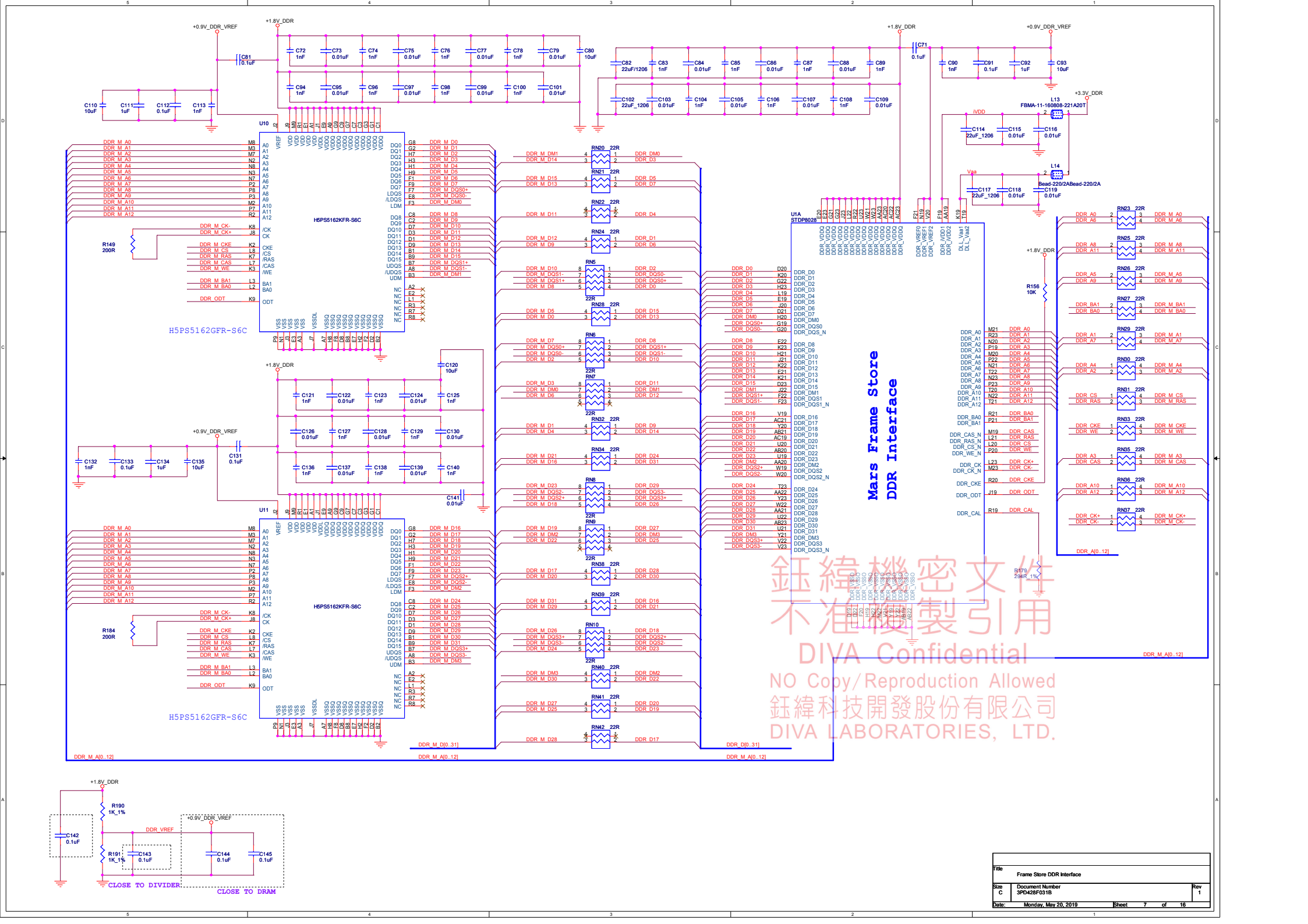
Mars Frame Store
DDR Interface
H5PS5162GFR-S6C
U1A
STDP8028
+0.9V_DDR_VREF
+1.8V_DDR
+3.3V_DDR
DDR_M_A[0..12]
DDR_M_D[0..31]
DDR_VREF
CLOSE TO DIVIDER
CLOSE TO DRAM
鈺緯機密文件
不准複製引用
DIVA Confidential
NO Copy/Reproduction Allowed
鈺緯科技開發股份有限公司
DIVA LABORATORIES, LTD.
Title
Frame Store DDR Interface
Size C
Document Number 3PD428F031B
Rev 1
Date: Monday, May 20, 2019
Sheet 7 of 16

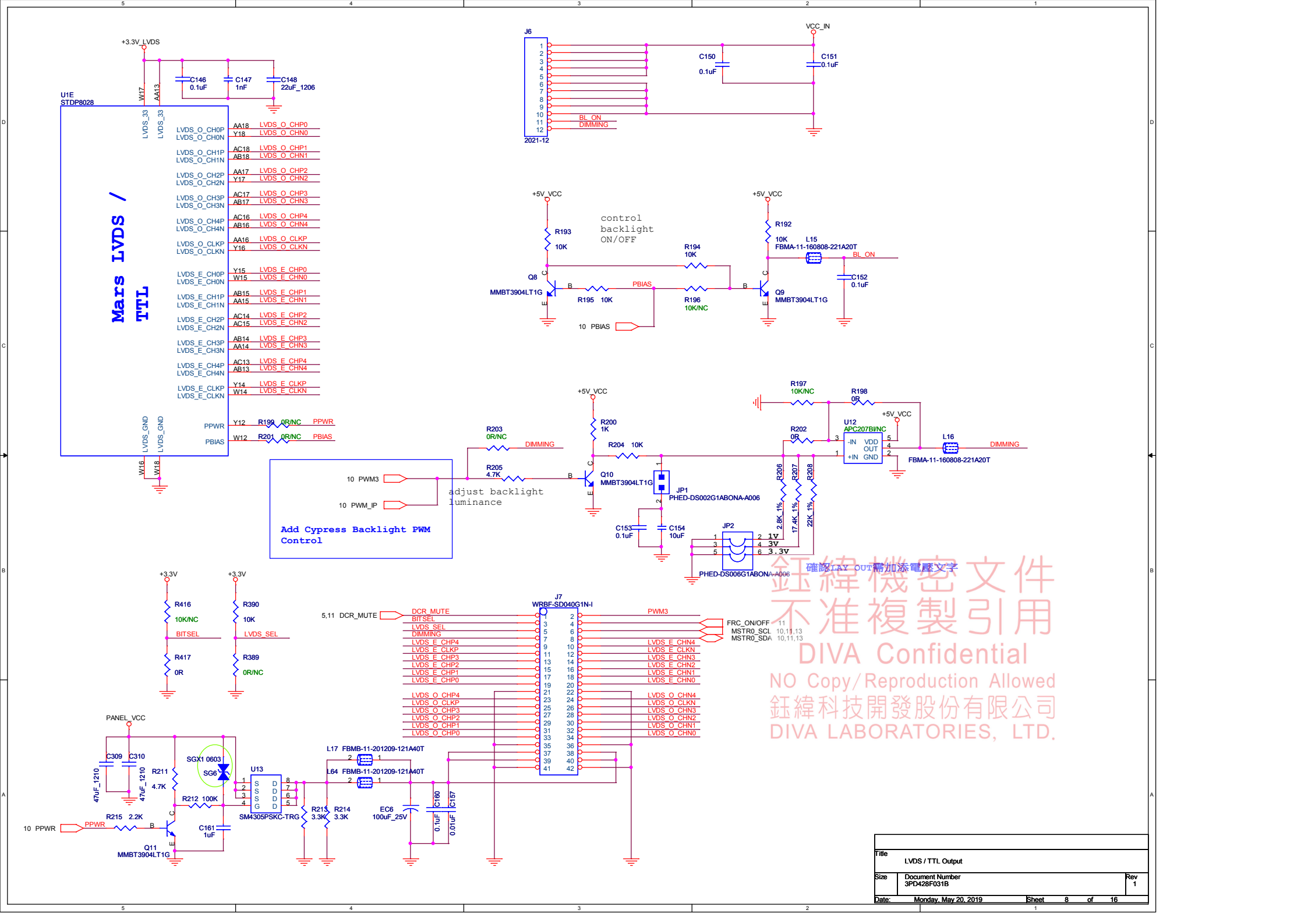
U1E
STDP8028
Mars LVDS / TTL
+3.3V_LVDS
C146 0.1uF
C147 1nF
C148 22uF_1206
LVDS_O_CH0P
LVDS_O_CH0N
LVDS_O_CH1P
LVDS_O_CH1N
LVDS_O_CH2P
LVDS_O_CH2N
LVDS_O_CH3P
LVDS_O_CH3N
LVDS_O_CH4P
LVDS_O_CH4N
LVDS_O_CLKP
LVDS_O_CLKN
LVDS_E_CH0P
LVDS_E_CH0N
LVDS_E_CH1P
LVDS_E_CH1N
LVDS_E_CH2P
LVDS_E_CH2N
LVDS_E_CH3P
LVDS_E_CH3N
LVDS_E_CH4P
LVDS_E_CH4N
LVDS_E_CLKP
LVDS_E_CLKN
PPWR
PBIAS
R199 0R/NC
R201 0R/NC
LVDS_GND
LVDS_33
J6
2021-12
VCC_IN
C150 0.1uF
C151 0.1uF
BL_ON
DIMMING
+5V_VCC
control backlight ON/OFF
R193 10K
R194 10K
R195 10K
R196 10K/NC
R192 10K
L15 FBMA-11-160808-221A20T
C152 0.1uF
Q8 MMBT3904LT1G
Q9 MMBT3904LT1G
PBIAS
10 PBIAS
10 PWM3
10 PWM_IP
adjust backlight luminance
Add Cypress Backlight PWM Control
R203 0R/NC
R205 4.7K
R200 1K
R204 10K
Q10 MMBT3904LT1G
JP1 PHED-DS002G1ABONA-A006
C153 0.1uF
C154 10uF
R206 2.8K 1%
R207 17.4K 1%
R208 22K 1%
JP2
1V
3V
3.3V
PHED-DS006G1ABONA-A006
R197 10K/NC
R198 0R
R202 0R
U12 APC207BI/NC
-IN VDD OUT +IN GND
L16 FBMA-11-160808-221A20T
確認LAY OUT需加添電壓文字
+3.3V
R416 10K/NC
R417 0R
R390 10K
R389 0R/NC
BITSEL
LVDS_SEL
J7
WRBF-SD040G1N-I
5,11 DCR_MUTE
DCR_MUTE
BITSEL
LVDS_SEL
DIMMING
PWM3
FRC_ON/OFF 11
MSTR0_SCL 10,11,13
MSTR0_SDA 10,11,13
PANEL_VCC
C309 47uF_1210
C310 47uF_1210
R211 4.7K
R212 100K
SGX1 0603
SG6
U13
SM4305PSKC-TRG
L17 FBMB-11-201209-121A40T
L64 FBMB-11-201209-121A40T
R213 3.3K
R214 3.3K
EC6 100uF_25V
C160 0.1uF
C157 0.01uF
R215 2.2K
10 PPWR
C161 1uF
Q11 MMBT3904LT1G
鈺緯機密文件
不准複製引用
DIVA Confidential
NO Copy/Reproduction Allowed
鈺緯科技開發股份有限公司
DIVA LABORATORIES, LTD.
Title
LVDS / TTL Output
Size
Document Number
3PD428F031B
Rev
1
Date: Monday, May 20, 2019
Sheet 8 of 16

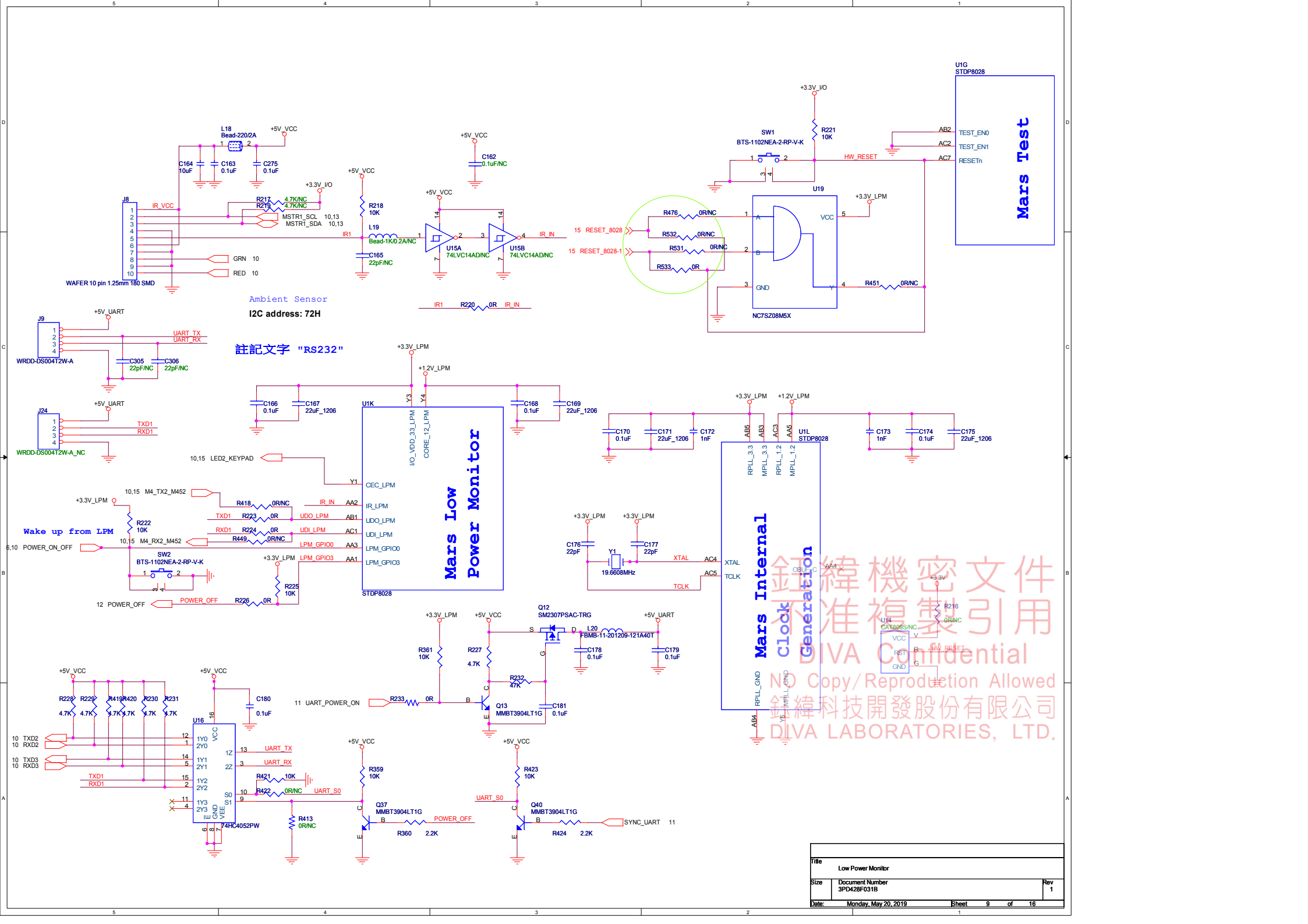
Mars Test
Ambient Sensor
I2C address: 72H
註記文字 "RS232"
Mars Low Power Monitor
Mars Internal Clock Generation
Wake up from LPM
WAFER 10 pin 1.25mm 180 SMD
WRDD-DS004T2W-A
WRDD-DS004T2W-A_NC
NC7SZ08M5X
74HC4052PW
STDP8028
19.6608MHz
鈺緯機密文件
不准複製引用
DIVA Confidential
ND Copy/Reproduction Allowed
鈺緯科技開發股份有限公司
DIVA LABORATORIES, LTD.
Title
Low Power Monitor
Size
Document Number
3PD428F031B
Rev
1
Date: Monday, May 20, 2019
Sheet 9 of 16

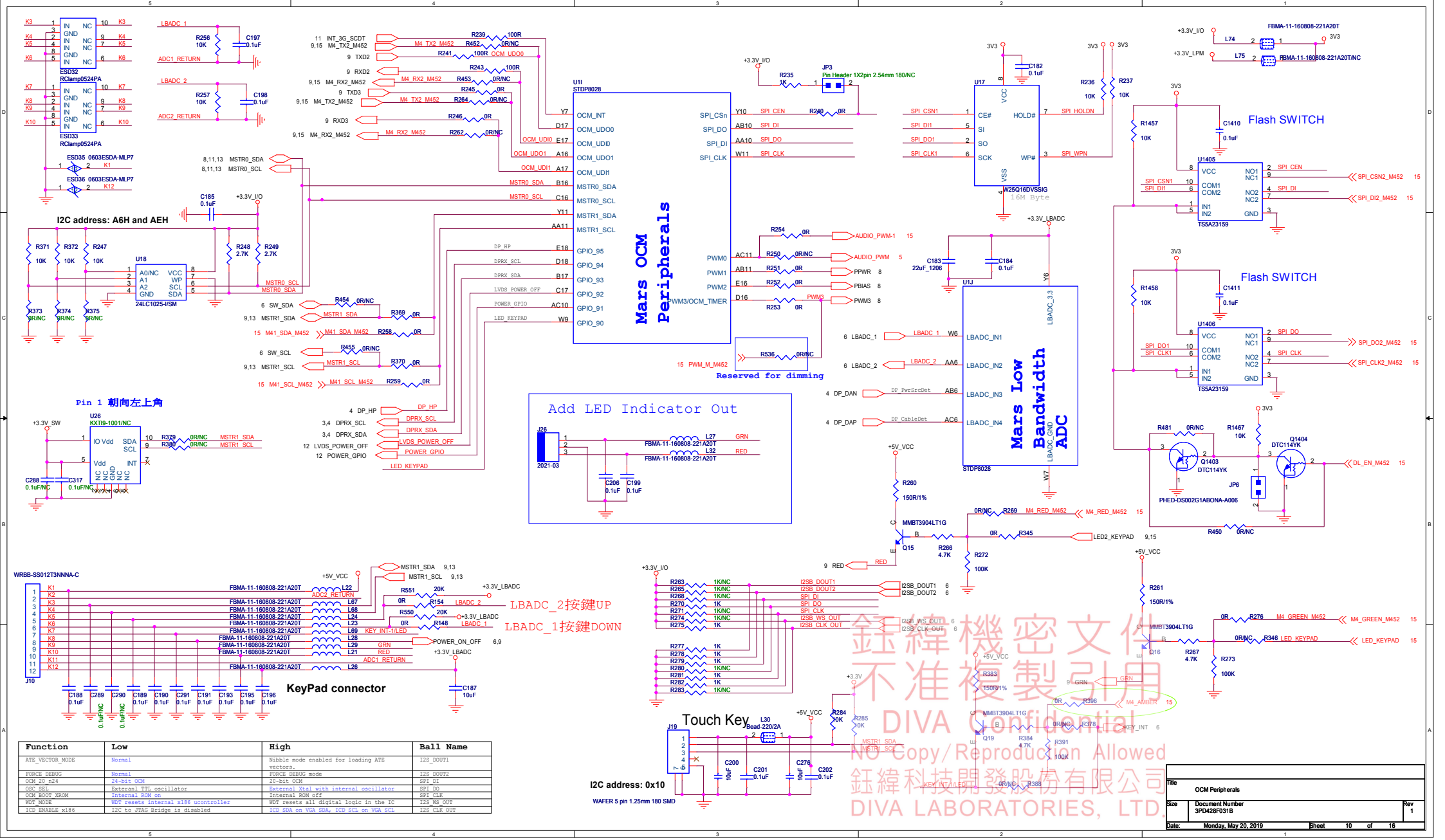

Function	Low	High	Ball Name
ATE_VECTOR_MODE	Normal	Nibble mode enabled for loading ATE vectors.	I2S_DOUT1
FORCE_DEBUG	Normal	FORCE_DEBUG mode	I2S_DOUT2
OCM_20_n24	24-bit OCM	20-bit OCM	SPI_DI
OSC_SEL	Exteranl TTL oscillator	External Xtal with internal oscillator	SPI_DO
OCM_BOOT_XROM	Internal ROM on	Internal ROM off	SPI_CLK
WDT_MODE	WDT resets internal x186 ucontroller	WDT resets all digital logic in the IC	I2S_WS_OUT
ICD_ENABLE_x186	I2C to JTAG Bridge is disabled	ICD_SDA on VGA_SDA, ICD_SCL on VGA_SCL	I2S_CLK_OUT

Title	OCM Peripherals
Size	Document Number 3PD428F031B Rev 1
Date: Monday, May 20, 2019	Sheet 10 of 16

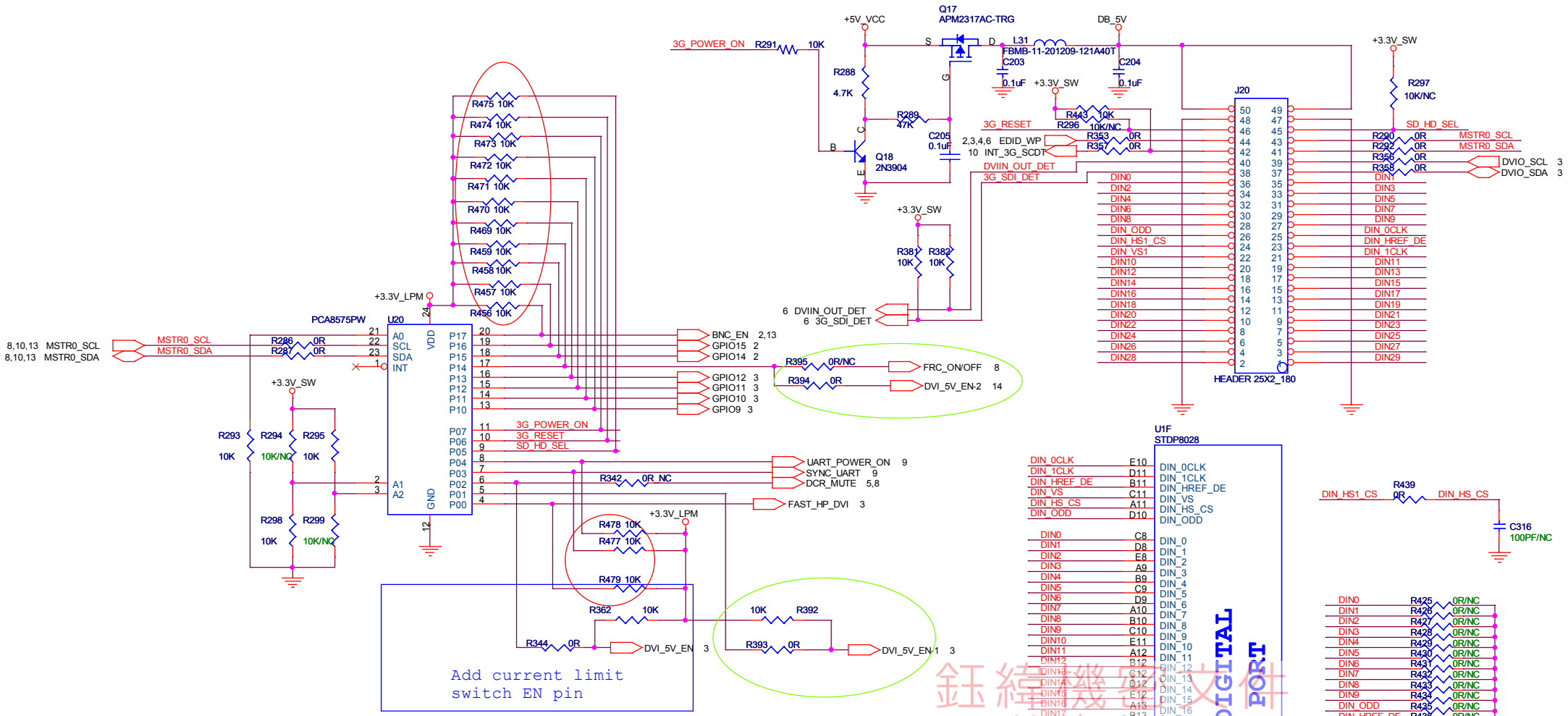

I2C address: 48H and 49H

	3G_SDI_DET	DVIIN_OUT_DET
Normal	H	H
3G 模組	L	H
DVI_IN_OUT 模組	H	L
----	L	L

	S_AV_DET	BNC_DET
Normal	H	H
S_AV BD	L	H
BNC BD	H	L
S_AV & BNC BD	L	L

鈺緯幾 智慧財產
不准複製使用
DIVA Confidential
NO Copy/Reproduction Allowed
鈺緯科技開發股份有限公司
DIVA LABORATORIES, LTD.

Title	GPIO - DIP	
Size B	Document Number 3PD428F031B	Rev 1
Date: Monday, July 22, 2019	Sheet 11 of 16	

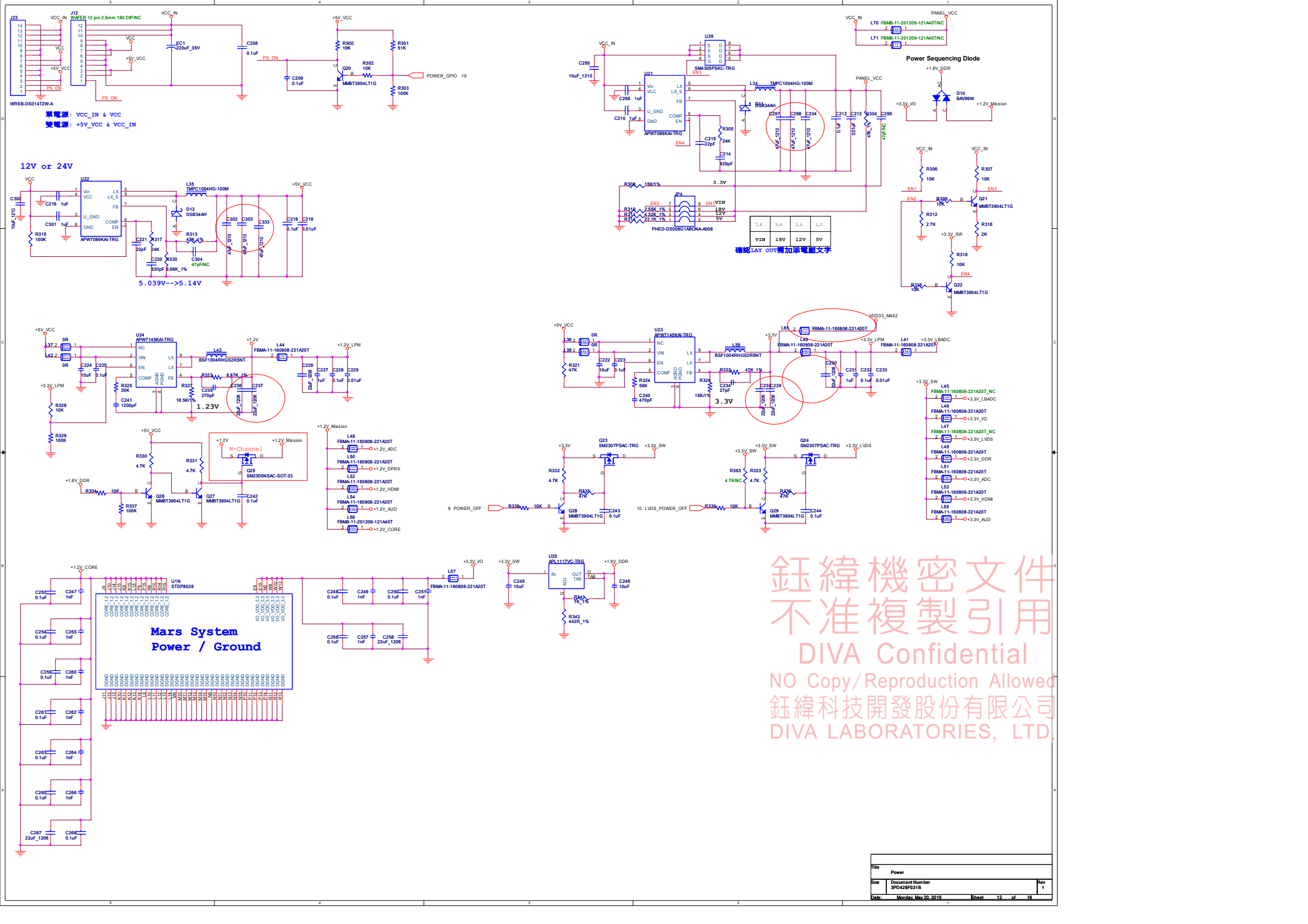

鈺緯機密文件
不准複製引用
DIVA Confidential
NO Copy/Reproduction Allowed
鈺緯科技開發股份有限公司
DIVA LABORATORIES, LTD.

Title	Power		
Size	Document Number 3PD428F031B		Rev 1
Date: Monday, May 20, 2019	Sheet 12 of 16		

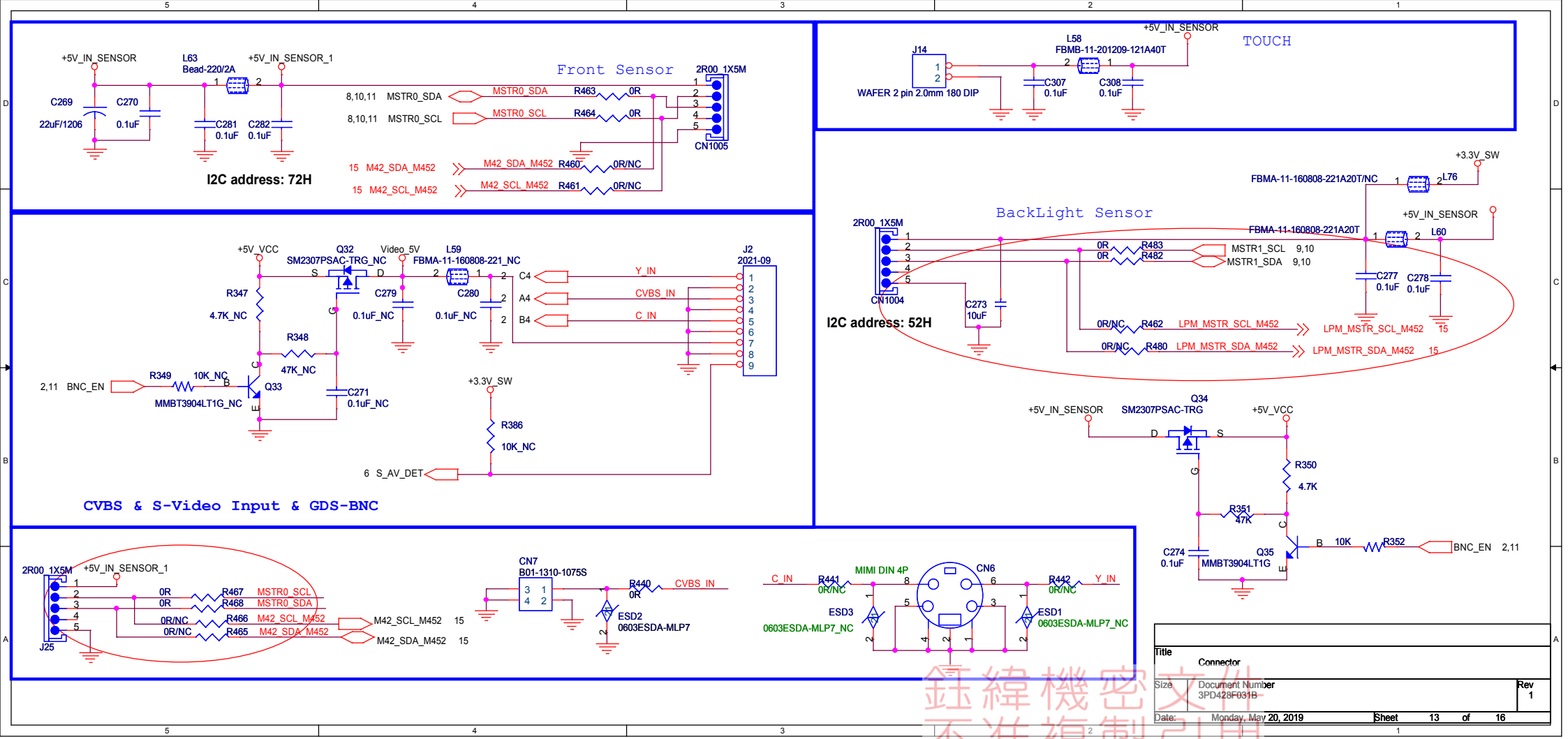

Title: Connector

Size | Document Number 3PD428F031B | Rev 1

Date: Monday, May 20, 2019 | Sheet 13 of 16

鈺緯機密文件
不准複製引用
DIVA Confidential
NO Copy/Reproduction Allowed
鈺緯科技開發股份有限公司
DIVA LABORATORIES, LTD.

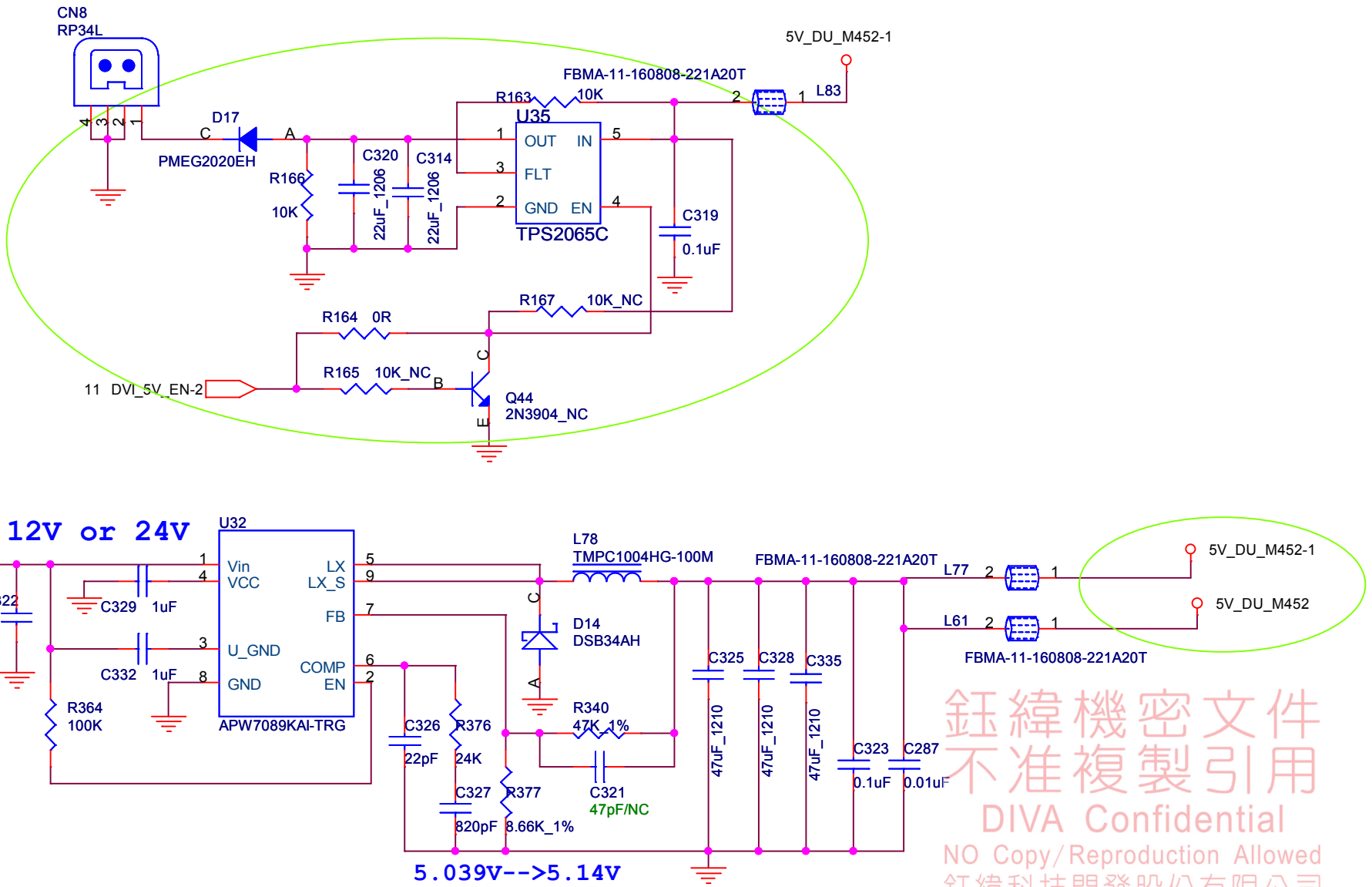

鈺緯機密文件
不准複製引用
DIVA Confidential
NO Copy/Reproduction Allowed
鈺緯科技開發股份有限公司
DIVA LABORATORIES, LTD.

Title	DC OUT	
Size	Document Number 3PD428F031B	Rev 1
Date: Wednesday, October 23, 2019	Sheet 14 of 16	

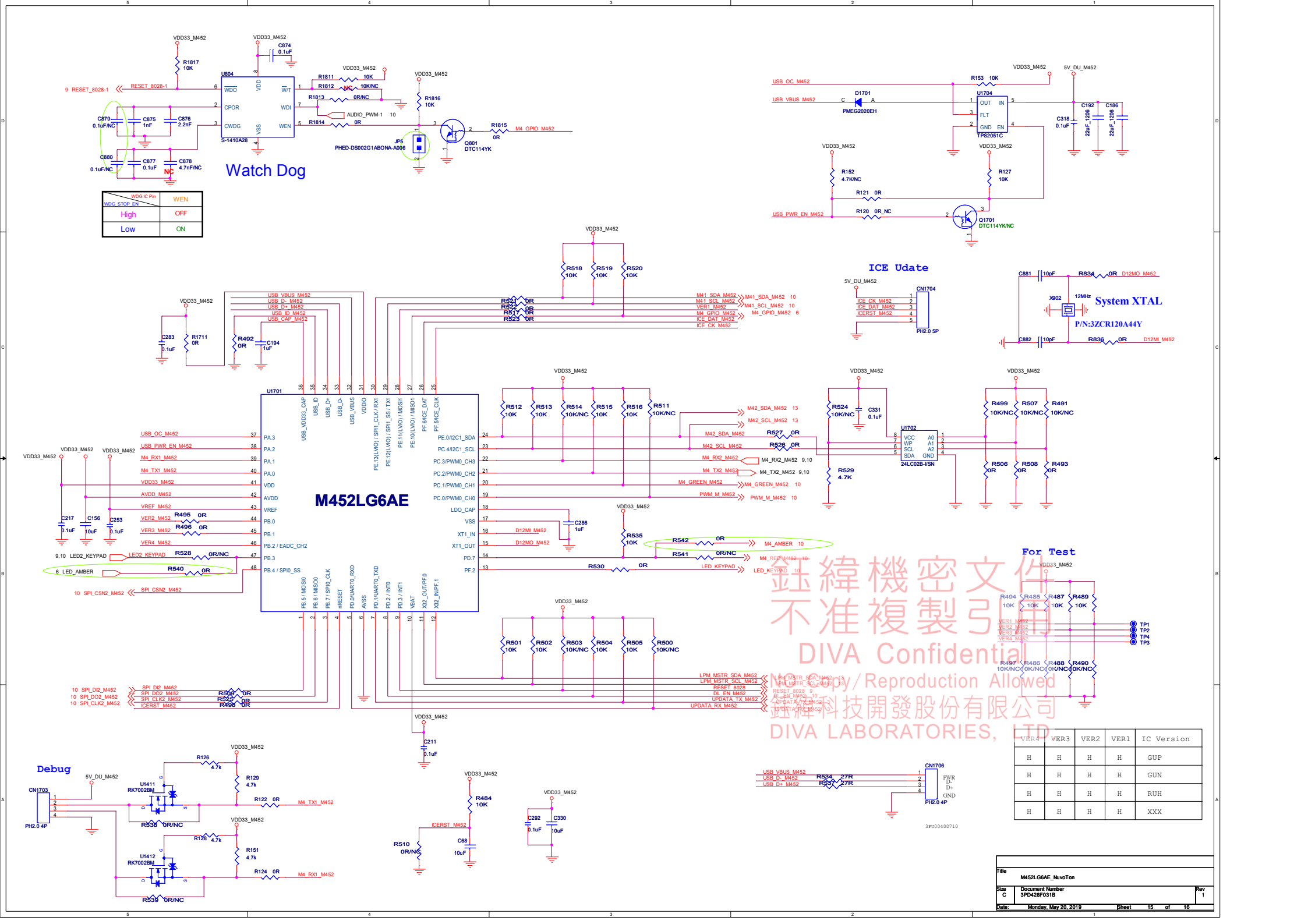
Watch Dog
WDG_STOP_EN
WDG IC Pin
WEN
High
OFF
Low
ON
ICE Udate
System XTAL
P/N:3ZCR120A44Y
M452LG6AE
Debug
For Test
DIVA Confidential
No Copy/Reproduction Allowed
DIVA LABORATORIES, LTD.
VER4
VER3
VER2
VER1
IC Version
GUP
GUN
RUH
XXX
Title
M452LG6AE_NuvoTon
Document Number
3PD428F031B
Rev
1
Date:
Monday, May 20, 2019
Sheet
15
of
16

DATE	Rev	PAGE	Description
			Purpose: In order to add 5V/500mA output with current limited function in DVI Pin #14, base on 3PD185F0110, modify 3PD185F0110 to be 3PD196F0310.
160629	0	3	Add: U303 74LVC14AD(NC) / C67 0.1uF(NC) / R64 0R / R72 0R <Reserved for schmitt trigger circuit>
		4	Add: D106 PMEG2020EH / U31 TPS2051C / Q39 2N3904 / C149 47uF / C155 47uF(NC) / C272 0.1uF / R76 10K / R89 10K / R97 10K(NC) / R90 10K(NC) / R118 0R <Add DVI-5V out with current limite circuit>
		10	Add: J26 2021-03 / L27 Bead-220/2A / L32 Bead-220/2A / C206 0.1uF / C199 0.1uF <Add LED Indicator Out>
		11	Add: R344 0R / R362 10K(NC) / R342 0R(NC) <Add current limit switch EN pin>
		12	Change: R320 8.87K1% to 8.66K1% <LPM_5V 5.039V to 5.14V>
			Delete: L72 Bead-220/2A / CN5 DC Jack / U28 APM9435KC / U27 TS391AL-AF5 / U30 EMP8040 / TVS1 / F1 / F2 / Q39 2N3904 /R391 47K1% / R392 30K1% / R393 100K / R394 100K / R395 12K1% / R396 24K1% / R238 0R / R414 3.3K / R415 3K / C292 1nF / C293 0.1uF / C294 0.1uF / C313 1uF / C314 1uF <Delete DC-5V out circuit>
160713		10	Add: R263 0R <Dimming PWM on scaler side R> Change: R260 & R261 300R1% to 150R1% <Revise LED current 10mA to 20mA>
		14	Add: C156 47uF / C313 & C314 0.1uF / D14 PMEG2020EH / D15 & D16 & D17 1N4148 / Q43 & Q44 2N7002 / R364 & R369 & R370 & R376 & R378 & R383 100R / R377 & R414 0R / R395 0R_NC / R384 & R392 & R396 & R414 4.7K / R388 & R391 & R393 & R394 4.7K_NC / U27 CY8C29466 / U28 24LC16BT-I/SNG <Reserved for external MCU to control dimming PWM & DVI5V_EN circuit>

鈺緯機密文件
不准複製引用
DIVA Confidential
NO Copy/Reproduction Allowed
鈺緯科技開發股份有限公司
DIVA LABORATORIES, LTD.

Title	REV-0		
Size B	Document Number 3PD428F031B		Rev 1
Date: Tuesday, May 12, 2020	Sheet 16 of 16		