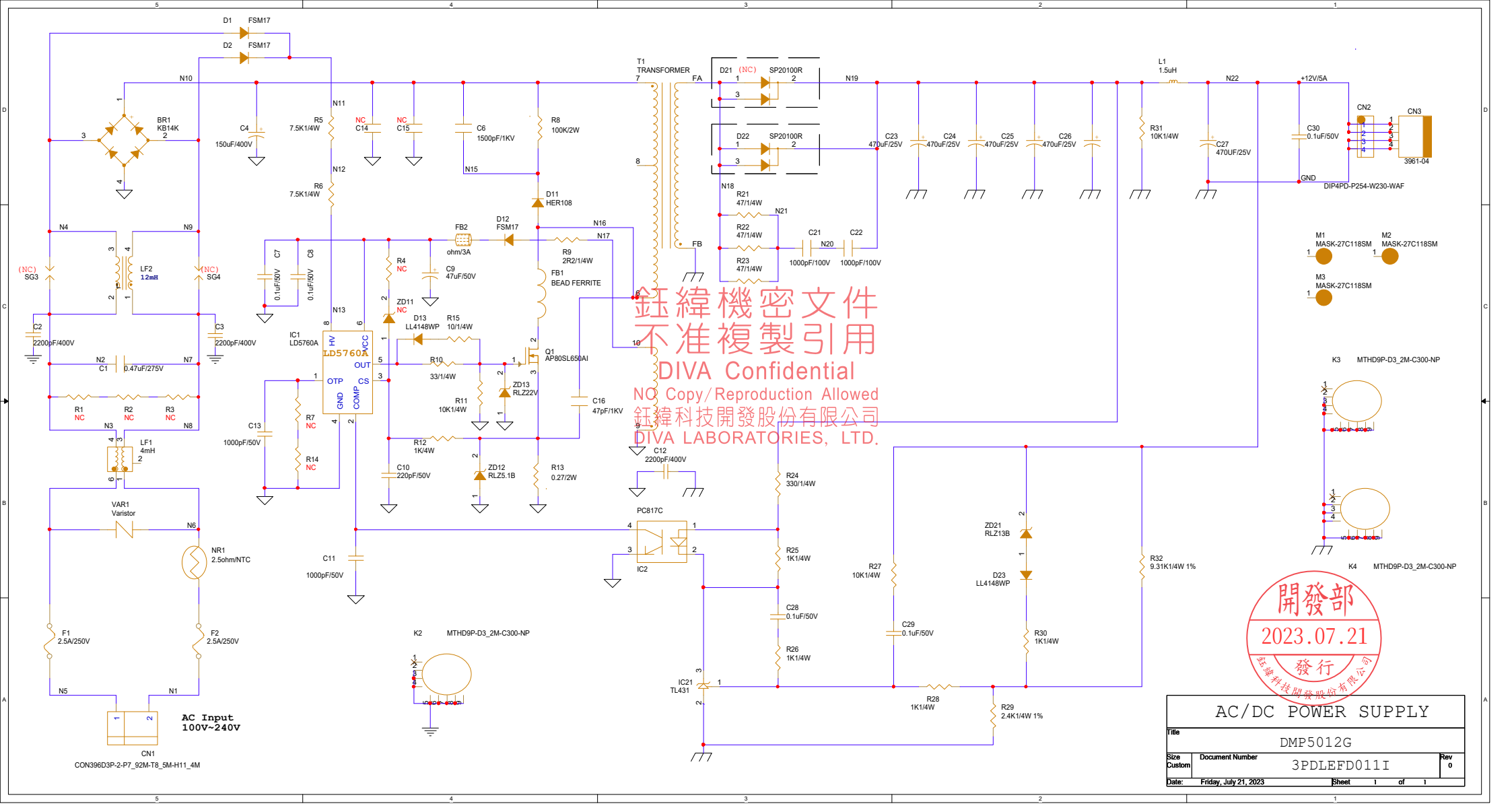
D1 FSM17
D2 FSM17
BR1 KB14K
C4 150uF/400V
R5 7.5K1/4W
R6 7.5K1/4W
NC C14
NC C15
C6 1500pF/1KV
R8 100K/2W
T1 TRANSFORMER
D21 (NC) SP20100R
D22 SP20100R
N19
C23 470uF/25V
C24 470uF/25V
C25 470uF/25V
C26 470uF/25V
L1 1.5uH
R31 10K1/4W
N22
C27 470UF/25V
+12V/5A
C30 0.1uF/50V
GND
CN2
CN3 3961-04
DIP4PD-P254-W230-WAF
D11 HER108
D12 FSM17
FB2 ohm/3A
R9 2R2/1/4W
FB1 BEAD FERRITE
R21 47/1/4W
R22 47/1/4W
R23 47/1/4W
C21 1000pF/100V
C22 1000pF/100V
M1 MASK-27C118SM
M2 MASK-27C118SM
M3 MASK-27C118SM
(NC) SG3
(NC) SG4
LF2 12mH
C2 2200pF/400V
C3 2200pF/400V
C1 0.47uF/275V
R1 NC
R2 NC
R3 NC
LF1 4mH
C7 0.1uF/50V
C8 0.1uF/50V
IC1 LD5760A
R4 NC
C9 47uF/50V
ZD11 NC
D13 LL4148WP
R15 10/1/4W
R10 33/1/4W
R11 10K1/4W
R12 1K/4W
ZD13 RLZ22V
Q1 AP80SL650AI
C16 47pF/1KV
C13 1000pF/50V
R7 NC
R14 NC
C10 220pF/50V
ZD12 RLZ5.1B
R13 0.27/2W
C11 1000pF/50V
C12 2200pF/400V
PC817C
IC2
R24 330/1/4W
R25 1K1/4W
C28 0.1uF/50V
R26 1K1/4W
IC21 TL431
R27 10K1/4W
C29 0.1uF/50V
ZD21 RLZ13B
D23 LL4148WP
R30 1K1/4W
R28 1K1/4W
R29 2.4K1/4W 1%
R32 9.31K1/4W 1%
K3 MTHD9P-D3_2M-C300-NP
K4 MTHD9P-D3_2M-C300-NP
K2 MTHD9P-D3_2M-C300-NP
VAR1 Varistor
NR1 2.5ohm/NTC
F1 2.5A/250V
F2 2.5A/250V
AC Input 100V~240V
CN1 CON396D3P-2-P7_92M-T8_5M-H11_4M
N10
N11
N12
N15
N16
N17
N18
N21
N20
N4
N9
N2
N7
N3
N8
N13
N6
N5
N1
N14
N23
N24
N25
N26
N27
N28
N29
N30
N31
N32
N33
N34
N35
N36
N37
N38
N39
N40
N41
N42
N43
N44
N45
N46
N47
N48
N49
N50
N51
N52
N53
N54
N55
N56
N57
N58
N59
N60
N61
N62
N63
N64
N65
N66
N67
N68
N69
N70
N71
N72
N73
N74
N75
N76
N77
N78
N79
N80
N81
N82
N83
N84
N85
N86
N87
N88
N89
N90
N91
N92
N93
N94
N95
N96
N97
N98
N99
N100
N101
N102
N103
N104
N105
N106
N107
N108
N109
N110
N111
N112
N113
N114
N115
N116
N117
N118
N119
N120
N121
N122
N123
N124
N125
N126
N127
N128
N129
N130
N131
N132
N133
N134
N135
N136
N137
N138
N139
N140
N141
N142
N143
N144
N145
N146
N147
N148
N149
N150
N151
N152
N153
N154
N155
N156
N157
N158
N159
N160
N161
N162
N163
N164
N165
N166
N167
N168
N169
N170
N171
N172
N173
N174
N175
N176
N177
N178
N179
N180
N181
N182
N183
N184
N185
N186
N187
N188
N189
N190
N191
N192
N193
N194
N195
N196
N197
N198
N199
N200
N201
N202
N203
N204
N205
N206
N207
N208
N209
N210
N211
N212
N213
N214
N215
N216
N217
N218
N219
N220
N221
N222
N223
N224
N225
N226
N227
N228
N229
N230
N231
N232
N233
N234
N235
N236
N237
N238
N239
N240
N241
N242
N243
N244
N245
N246
N247
N248
N249
N250
N251
N252
N253
N254
N255
N256
N257
N258
N259
N260
N261
N262
N263
N264
N265
N266
N267
N268
N269
N270
N271
N272
N273
N274
N275
N276
N277
N278
N279
N280
N281
N282
N283
N284
N285
N286
N287
N288
N289
N290
N291
N292
N293
N294
N295
N296
N297
N298
N299
N300
N301
N302
N303
N304
N305
N306
N307
N308
N309
N310
N311
N312
N313
N314
N315
N316
N317
N318
N319
N320
N321
N322
N323
N324
N325
N326
N327
N328
N329
N330
N331
N332
N333
N334
N335
N336
N337
N338
N339
N340
N341
N342
N343
N344
N345
N346
N347
N348
N349
N350
N351
N352
N353
N354
N355
N356
N357
N358
N359
N360
N361
N362
N363
N364
N365
N366
N367
N368
N369
N370
N371
N372
N373
N374
N375
N376
N377
N378
N379
N380
N381
N382
N383
N384
N385
N386
N387
N388
N389
N390
N391
N392
N393
N394
N395
N396
N397
N398
N399
N400
N401
N402
N403
N404
N405
N406
N407
N408
N409
N410
N411
N412
N413
N414
N415
N416
N417
N418
N419
N420
N421
N422
N423
N424
N425
N426
N427
N428
N429
N430
N431
N432
N433
N434
N435
N436
N437
N438
N439
N440
N441
N442
N443
N444
N445
N446
N447
N448
N449
N450
N451
N452
N453
N454
N455
N456
N457
N458
N459
N460
N461
N462
N463
N464
N465
N466
N467
N468
N469
N470
N471
N472
N473
N474
N475
N476
N477
N478
N479
N480
N481
N482
N483
N484
N485
N486
N487
N488
N489
N490
N491
N492
N493
N494
N495
N496
N497
N498
N499
N500
N501
N502
N503
N504
N505
N506
N507
N508
N509
N510
N511
N512
N513
N514
N515
N516
N517
N518
N519
N520
N521
N522
N523
N524
N525
N526
N527
N528
N529
N530
N531
N532
N533
N534
N535
N536
N537
N538
N539
N540
N541
N542
N543
N544
N545
N546
N547
N548
N549
N550
N551
N552
N553
N554
N555
N556
N557
N558
N559
N560
N561
N562
N563
N564
N565
N566
N567
N568
N569
N570
N571
N572
N573
N574
N575
N576
N577
N578
N579
N580
N581
N582
N583
N584
N585
N586
N587
N588
N589
N590
N591
N592
N593
N594
N595
N596
N597
N598
N599
N600
N601
N602
N603
N604
N605
N606
N607
N608
N609
N610
N611
N612
N613
N614
N615
N616
N617
N618
N619
N620
N621
N622
N623
N624
N625
N626
N627
N628
N629
N630
N631
N632
N633
N634
N635
N636
N637
N638
N639
N640
N641
N642
N643
N644
N645
N646
N647
N648
N649
N650
N651
N652
N653
N654
N655
N656
N657
N658
N659
N660
N661
N662
N663
N664
N665
N666
N667
N668
N669
N670
N671
N672
N673
N674
N675
N676
N677
N678
N679
N680
N681
N682
N683
N684
N685
N686
N687
N688
N689
N690
N691
N692
N693
N694
N695
N696
N697
N698
N699
N700
N701
N702
N703
N704
N705
N706
N707
N708
N709
N710
N711
N712
N713
N714
N715
N716
N717
N718
N719
N720
N721
N722
N723
N724
N725
N726
N727
N728
N729
N730
N731
N732
N733
N734
N735
N736
N737
N738
N739
N740
N741
N742
N743
N744
N745
N746
N747
N748
N749
N750
N751
N752
N753
N754
N755
N756
N757
N758
N759
N760
N761
N762
N763
N764
N765
N766
N767
N768
N769
N770
N771
N772
N773
N774
N775
N776
N777
N778
N779
N780
N781
N782
N783
N784
N785
N786
N787
N788
N789
N790
N791
N792
N793
N794
N795
N796
N797
N798
N799
N800
N801
N802
N803
N804
N805
N806
N807
N808
N809
N810
N811
N812
N813
N814
N815
N816
N817
N818
N819
N820
N821
N822
N823
N824
N825
N826
N827
N828
N829
N830
N831
N832
N833
N834
N835
N836
N837
N838
N839
N840
N841
N842
N843
N844
N845
N846
N847
N848
N849
N850
N851
N852
N853
N854
N855
N856
N857
N858
N859
N860
N861
N862
N863
N864
N865
N866
N867
N868
N869
N870
N871
N872
N873
N874
N875
N876
N877
N878
N879
N880
N881
N882
N883
N884
N885
N886
N887
N888
N889
N890
N891
N892
N893
N894
N895
N896
N897
N898
N899
N900
N901
N902
N903
N904
N905
N906
N907
N908
N909
N910
N911
N912
N913
N914
N915
N916
N917
N918
N919
N920
N921
N922
N923
N924
N925
N926
N927
N928
N929
N930
N931
N932
N933
N934
N935
N936
N937
N938
N939
N940
N941
N942
N943
N944
N945
N946
N947
N948
N949
N950
N951
N952
N953
N954
N955
N956
N957
N958
N959
N960
N961
N962
N963
N964
N965
N966
N967
N968
N969
N970
N971
N972
N973
N974
N975
N976
N977
N978
N979
N980
N981
N982
N983
N984
N985
N986
N987
N988
N989
N990
N991
N992
N993
N994
N995
N996
N997
N998
N999
N1000
鈺緯機密文件
不准複製引用
DIVA Confidential
NO Copy/Reproduction Allowed
鈺緯科技開發股份有限公司
DIVA LABORATORIES, LTD.
開發部
2023.07.21
發行
鈺緯科技開發股份有限公司
AC/DC POWER SUPPLY
Title
DMP5012G
Size Custom
Document Number
3PDLEFD011I
Rev 0
Date: Friday, July 21, 2023
Sheet 1 of 1