PI3WVR12412

HDMI 2.0, DisplayPort 1.2 Video Switch

Features

- 4-lane, 1:2 mux/demux that will support RBR, HBR1, or HBR2
- Data rate: 3.4 Gbps to 6.0 Gbps for high data channels
- Supports DDC with HPD channel mux/demux @ HDMI
- Supports 720 Mbps high-speed DP AUX @ DP
- -1.7 dB Insertion Loss for Dx channels @ 3.0 GHz
- -3 dB Bandwidth for Dx channels: 4.8 GHz
- Return loss for Dx channels @ 3.0 GHz: -16 dB
- Low Crosstalk for high speed channels: -25 dB@6.0 Gbps
- Low Off Isolation for high speed channels: -22dB@6.0 Gbps
- Low channel-to-channel skew, 35ps max
- Low Bit-to-Bit Skew, 5ps typ (between '+' and '-' bits)
- V_{DD} Operating Range: 3.3V +/-10%
- ESD Tolerance: 2kV HBM
- Packaging (Pb-free & Green): 42 TQFN (ZHE)

Description

Pericom Semiconductor's PI3WVR12412 is a multi-standard video switch with wide voltage range capability. It supports HDMI 2.0, DisplayPort 1.2, and emerging and proprietary standard.

PI3WVR12412 can pass high-speed signals up to 1.2 V peak-to-peak differential with a common-mode voltage from 0 to 3.4V for TMDS signal.

The wide voltage range allow DC-coupled multi-standard operation. Eliminating AC coupling capacitors saves board space and improves signal integrity for dense PCB design. The high speed channels can also pass 0V-3.3V CMOS signals up to 1MHz.

In addition to four high-speed lanes, PI3WVR12412 also switches the DDC and HPD signals or AUX and HPD signals using the DDC/ AUX and HPD channel mux/demux.

Application

- Routing of HDMI 2.0 video signals with low signal attenuation between source and sink for 4K2K ultra high definition video display and broadcast video equipment.
- Routing of DisplayPort video signals with low signal attenuation between source and sink for PC and monitor.

Block Diagram

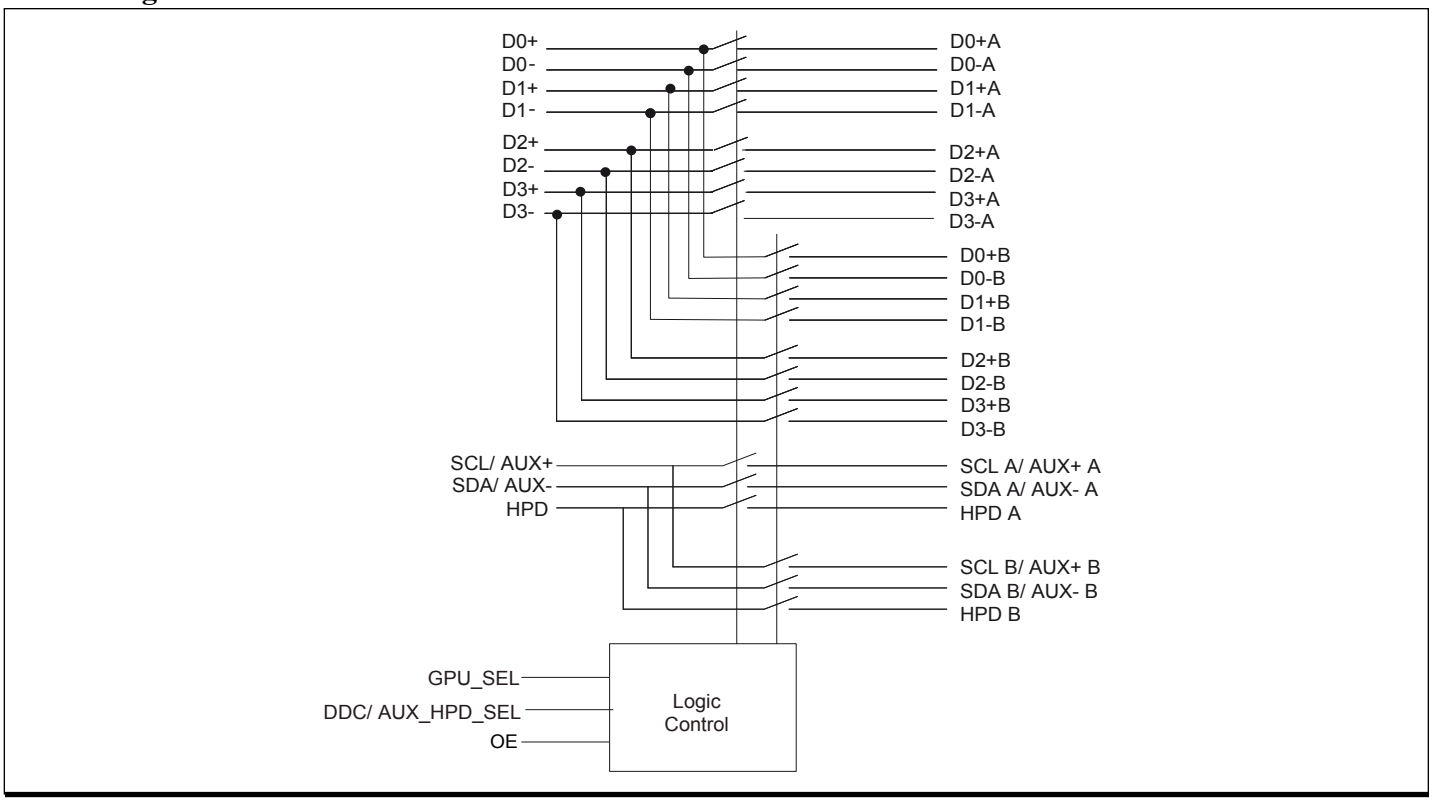

Pin Assignment (TQFN-42, ZHE)

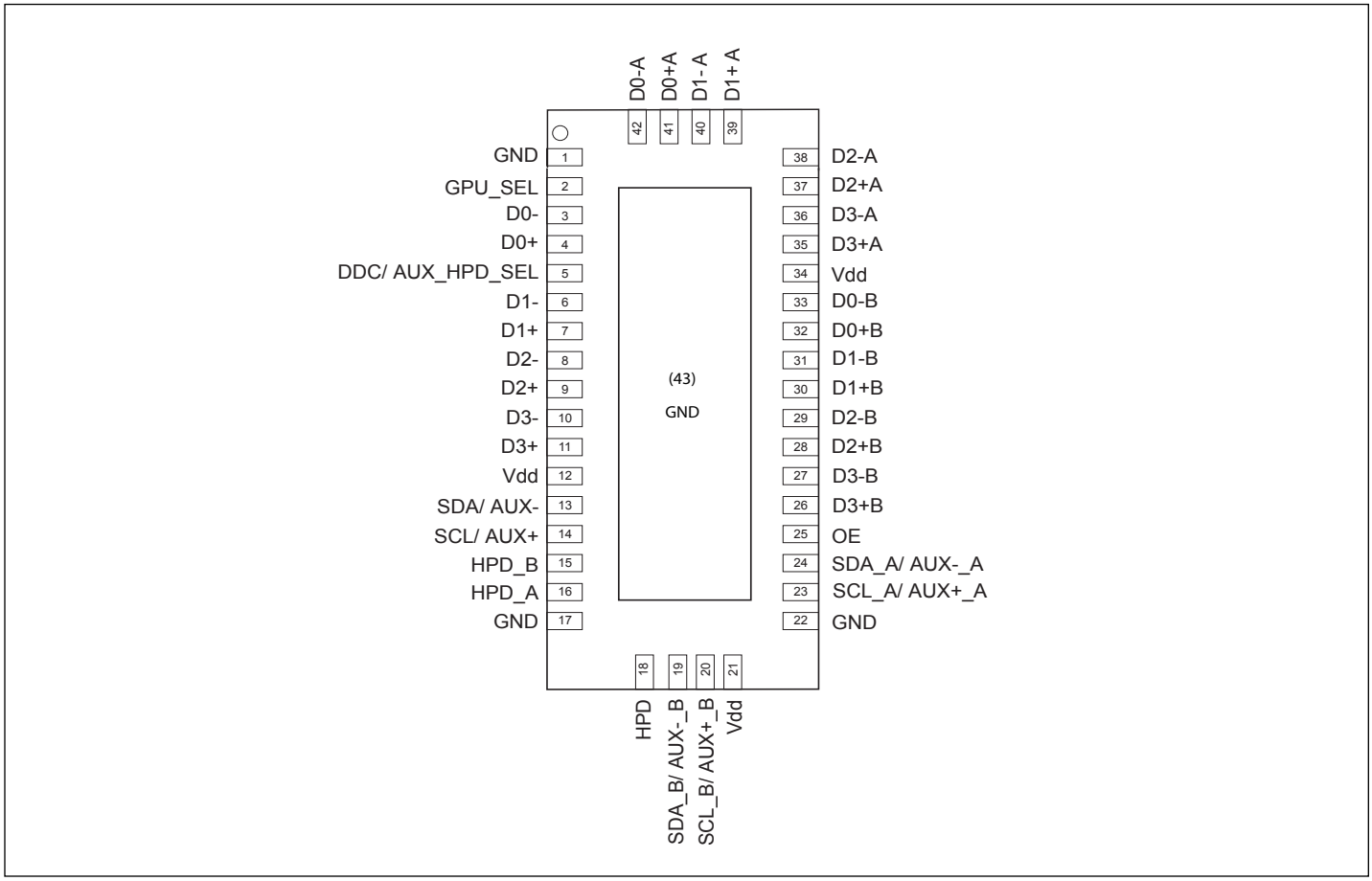

Truth Table

Control			Switch Function		
OE	**GPU_SEL**	**DDC/ AUX_HPD_SEL**	**D0-D3**	**DDC/ AUX**	**HPD**
High	Low	Low	A	DDC A/ AUX A	HPD A
High	Low	High	A	DDC B/ AUX B	HPD B
High	High	Low	B	DDC A/AUX A	HPD A
High	High	High	B	DDC B/ AUX B	HPD B
Low	x	x	Hi-Z	Hi-Z	Hi-Z

Packaging Mechanical: 42ZH

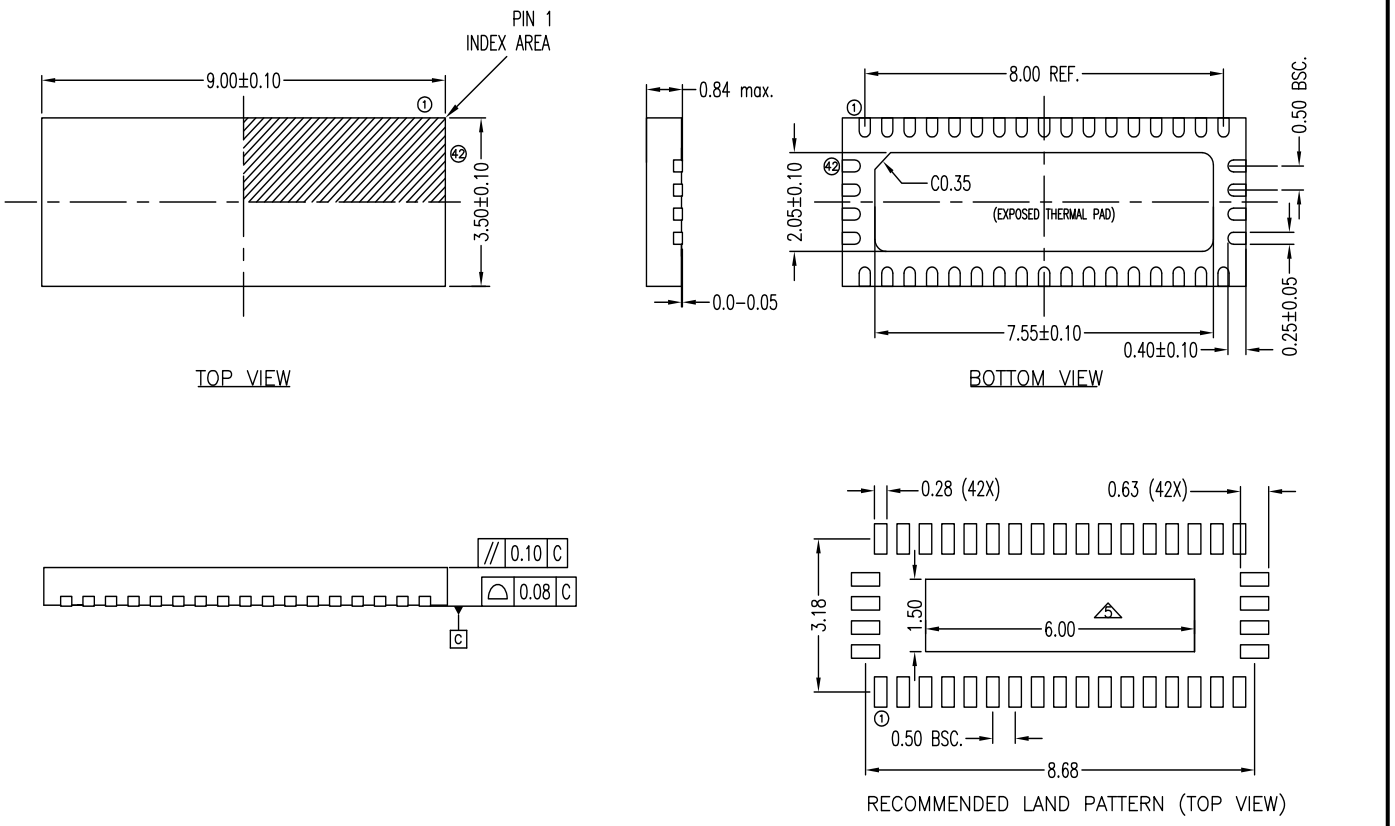

Notes:
1. All dimensions are in millimeters. Angles in degrees.
2. Coplanarity applies to the exposed pad as well as the terminals.
3. Refer JEDEC MO-220.
4. Recommended land pattern is for reference only.
5. Thermal pad soldering area

PERICOM Enabling Serial Connectivity	DATE: 11/14/12
DESCRIPTION: 42-contact Thin Fine Pitch Quad Flat No-Lead (TQFN)	
PACKAGE CODE: ZH42	
DOCUMENT CONTROL #: PD-2035	REVISION:D

12-0529

Note:

For latest package info, please check: http://www.pericom.com/products/packaging/mechanicals.php

Ordering Information

Ordering Code	Package Code	Package Description
PI3WVR12412ZHE	ZH	42-contact, Thin Fine Pitch Quad Flat No-Lead (TQFN)

Notes:
- Thermal characteristics can be found on the company web site at www.pericom.com/packaging/
- "E" denotes Pb-free and Green
- Adding an "X" at the end of the ordering code denotes tape and reel packaging