Confidential Document

DATA IMAGE CORPORATION

ITEM NO.: FC240060DSSWNG01 2AAD539013T(T0184)

☐Prototype ☐Pre-prod. ■Mass prod. Specification

Table of Contents

1. COVER & CONTENTS ····· 1
2. RECORD OF REVISION ····· 2
3. GENERAL SPECIFICATIONS ····· 3
4. ABSOLUTE MAXIMUM RATINGS ····· 3
5. ELECTRICAL CHARACTERISTICS ····· 4
6. INPUT SIGNAL CHARACTERISTICS ····· 5
7. OPTICAL CHARACTERISTIC ····· 11
8. PIN CONNECTIONS ····· 13
9. BLOCK DIAGRAM ····· 15
10. QUALITY ASSURANCE ····· 16
11. LCM PRODUCT LABEL DEFINE····· 21
12. PRECAUTIONS IN USE LCM ····· 23
13. OUTLINE DRAWING ····· 24
14. PACKAGE INFORMATION····· 26

Customer Companies	QA Approved	DQA Check	R&D Approved	R&D Check
	pretty	Andy	Roger	WenChun
Customer Approved by	Version:	Issued Date:	Total Pages:	Prepared
設計驗證 工程課 2023.08.28 發行	G	12/AUG/23'	26	Candy

2. RECORD OF REVISION

Rev	Date	Item	Page	Comment	Source
1	30/JUN/20'	All 13	All 24	Initial Preliminary Modify Outline Drawing from Rev.1 to 2 2)Add OB Label:35*10mm/Add Dimension:15.85±1mm	ESR0906010
2	9/DEC/20'	1 7 10.2 14	1 11~12 17~20 25	Revise Contents Modify Luminance Uniformity & Note 7 from 9 points to 13 points. Modify IIS Add PACKAGE INFORMATION	ESR0906010
3	2/JUN/21'	3 13	3 24	Modify Display Format Modify Outline Drawing from Rev.2 to 3 3)Modify Dim & Tol(13.04->13.05,25.04->25.055,27.05->27.055, 12.95) & Resolution(1920*RGB*1200->1920*RGB*1080), Important dimension circle number 12->13	NPDO-2178
A	19/DEC/21'	3 13 14	3 24 25	Add Weight Modify Outline Drawing from Rev. 3 to A 10) Change the drawing from Rev.3 to Rev. A. Add PACKAGE INFORMATION Release Rev: A for production	NPPR-1390
B	02/MAY/22'	13	24	Modify Outline Drawing from Rev. A to B B)Remove peeling tape & important dimension from circle 13 to 12 & Note 8 to 7	ECR110-M40001
C	26/MAY/22'	14	25	Modify PACKAGE INFORMATION	ECR110-M40001
D	21/JUL/22'	13	25	Add GF240060-1 Outline	ECR110-M40001
E	12/AUG/22'	7	11	Modify Viewing angle	ECR110-M40001
F	27/APR/23'	10.2.4	18	Modify IIS	ECR110-N40009
G	12/AUG/23'	10.2.4	18~20	Modify IIS	ECR110-N70014

3. GENERAL SPECIFICATIONS

Parameter	Specifications	Unit
Screen Size	24 (diagonal)	inch
Display Format	1920(H) x (R,G,B) x 1080(V)	dot
Outline Dimension	572.5(H) × 377.9(V) ×19.55(D)	mm
Active Area	518.4(H) x 291.6(V)	mm
Pixel Pitch	0.27(H) x 0.27(V)	mm
Pixel Configuration	R.G.B. Vertical Stripe	
Display mode	Transmissive Normally black	
Surface treatment	AR+AS Coating	
Back-light	LED	
View Angle direction	AII	
Weight	3860	g
Our components and processes are compliant to RoHS standard		

4. ABSOLUTE MAXIMUM RATINGS

Parameter	Symbol	Min.	Max.	Unit	Remark
Logic Input Voltage	VDD	0	13.2	V	
Input voltage for logic	V1	-0.3	4.0	V	Note3
Temperature Junction of LED	Tj	-	120	°C	Note4
Forward Current	If	-	100	mA/string	Note5
Operating Temperature	Top	0	50	°C	Note1,2
Storage Temperature	Tst	-20	60	°C	Note1,2

Note 1) Temperature and Humidity should be applied to the glass surface of a TFT LCD module,
Note2) The temperature of LCD front surface would be 65 ℃ in operating, it may affect the optical characteristics however it does not damage the function of the module.
Note 3) It is applied to pixel data signal and clock signal
Note 4) The specification shall be applied to each LED.
Note5) The specification shall be applied at connector pins for LED at start-up.

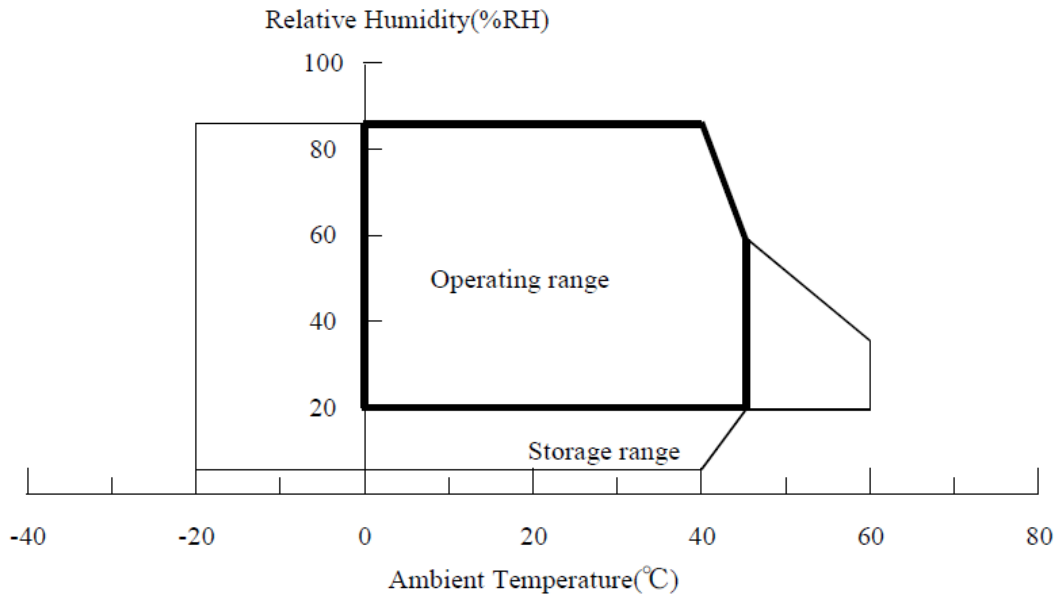

5. ELECTRICAL CHARACTERISTICS

5.1 TFT-LCD module

Ta = 25℃ , GND= 0 V

Item		Symbol	Min.	Typ.	Max.	Unit	Remark
Power supply voltage		VDD	11.4	12.0	12.6	V	
Power supply current		IDD	-	0.42	0.63	A	Note1,3
Power supply current		IDD	-	0.56	0.84	A	Note2,3
Ripple voltage of power supply		VDDR	-	-	150	mV	
LVDS select	High	LVDSSEL	1.7	-	2.5	V	
	Low		0	-	0.6	V	

Note 1) fV=60.0Hz，DCLK=77MHz，VDD=12.0V,and display pattern is horizontal stripe.
Note 2) fV=85.0Hz，DCLK=110MHz，VDD=12.0V, and display pattern is horizontal stripe.
Note3) Current fuse is built in a module. Current capacity of power supply for VDD should be larger than 4A, so that the fuse can be opened at the trouble of electrical circuit of module.

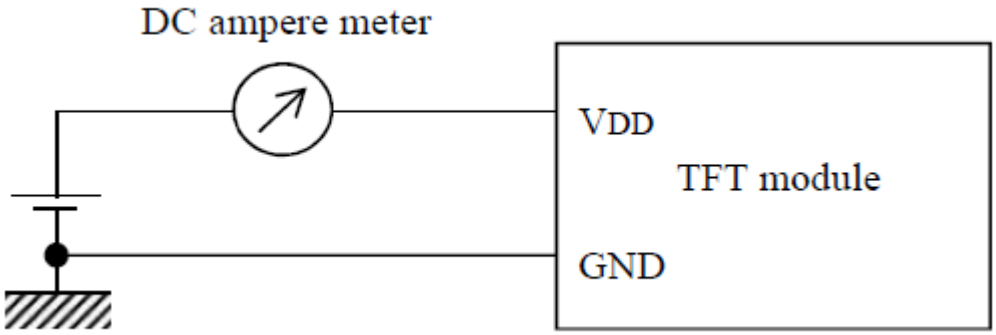

5.2 Back light unit

Ta = 25℃ , GND= 0 V

Parameter		Symbol	Min.	Typ	Max.	Unit	Remark
Forward Current (One LED Assembly)	Anode	Ifa	-	216	226.8	mA/connector	2 connector
	Cathode	Ifc	-	72	75.6	mA	
Forward Voltage	String	Vf	55.2	57.8	60.3	V	Ifc=72mA/string
	Variation	Vf(unit)	-	-	2.1	V	One LED Bar
Power Consumption		Pbl	-	25.0	27.4	W	Ifc=72mA/string
LED Life time		-	30,000	-	-	H	Note2

One Backlight Unit : 1 LED-Bar（2 connector)
One connector :3 LED String
One LED String : 10 LED package
Note 1) This characteristics should be applied putting on the LED about 60 minutes later with ambient temperature.(Ta = 25℃ ± 2℃)
Note2) The life time is estimated value and not guaranteed value. Lifetime of a LED is defined. The life is determined as the time at which brightness of the LED is 50 %compared tothat of initial value at that typical LED current on condition of continuous operating at 25 ± 2℃.

6. INPUT SIGNAL CHARACTERISTICS

6.1 LVDS Format

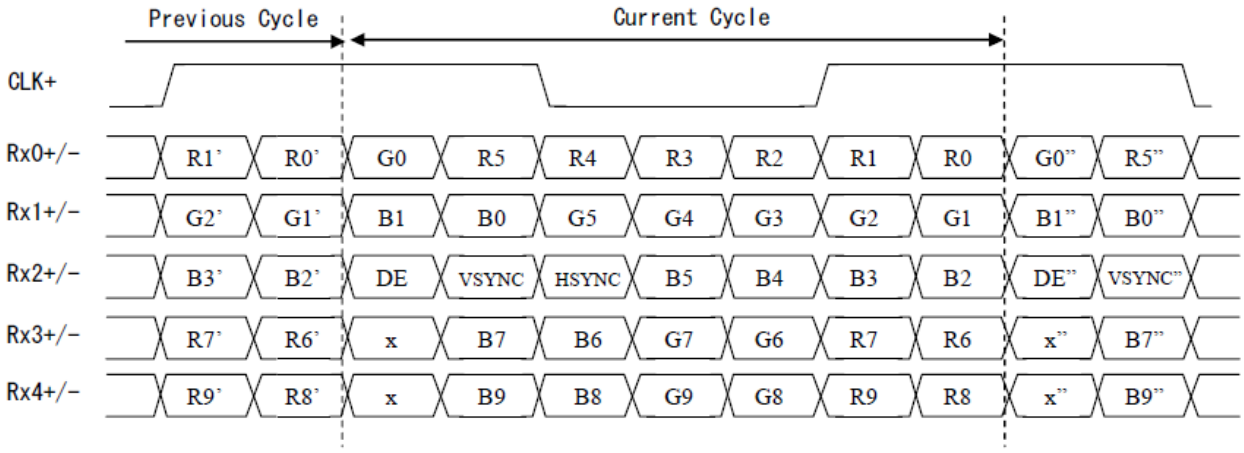

VESA LVDSSEL(CN1 #7) = High or Open

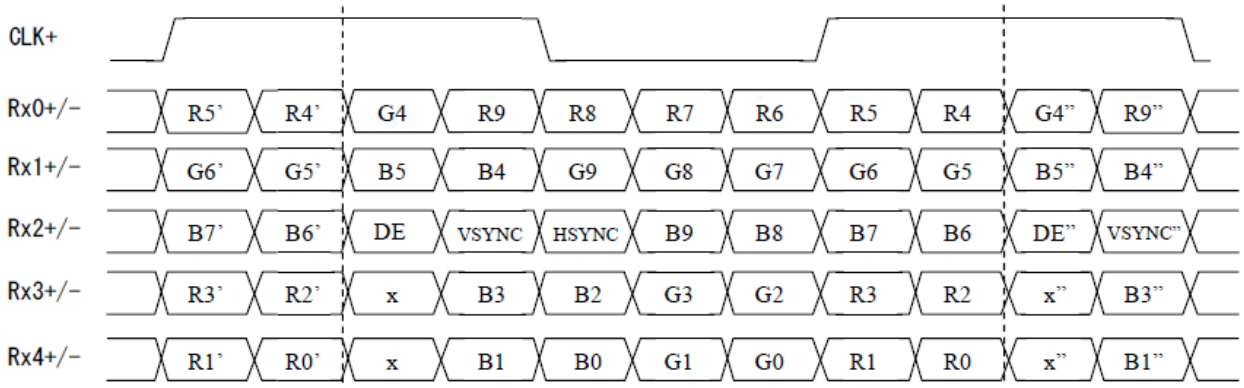

JEIDA LVDSSEL(CN1 #7) = Low

DE : Data Enable
VSYNC : Vertical SYNC
HSYNC : Horozontal SYNC
x : don't care
MSB LSB
R9 --- R0 : Red Data
G9 --- G0 : Green Data
B9 --- B0 : Blue Data

6.2 Correspondence between input data and display image

Display data of adjacent one pixel is latched during one cycle of DCLK.

RA	(1,1) GA	BA	RB	(1,2) GB	BB

ODD pixel : RA0 - RA9 : R data
GA0 - GA9 : G data
BA0 - BA9 : B data
EVEN pixel : RB0 - RB9 : R data
GB0 - GB9 : G data
BB0 - BB9 : B data

1 , 1	1 , 2	1 , 3	- -	1 , 1920
2 , 1	2 , 2	2 , 3	- -	2 , 1920
3 , 1	3 , 2	3 , 3	- -	3 , 1920
1200 , 1	1200 , 2	1200 , 3		1200, 1920

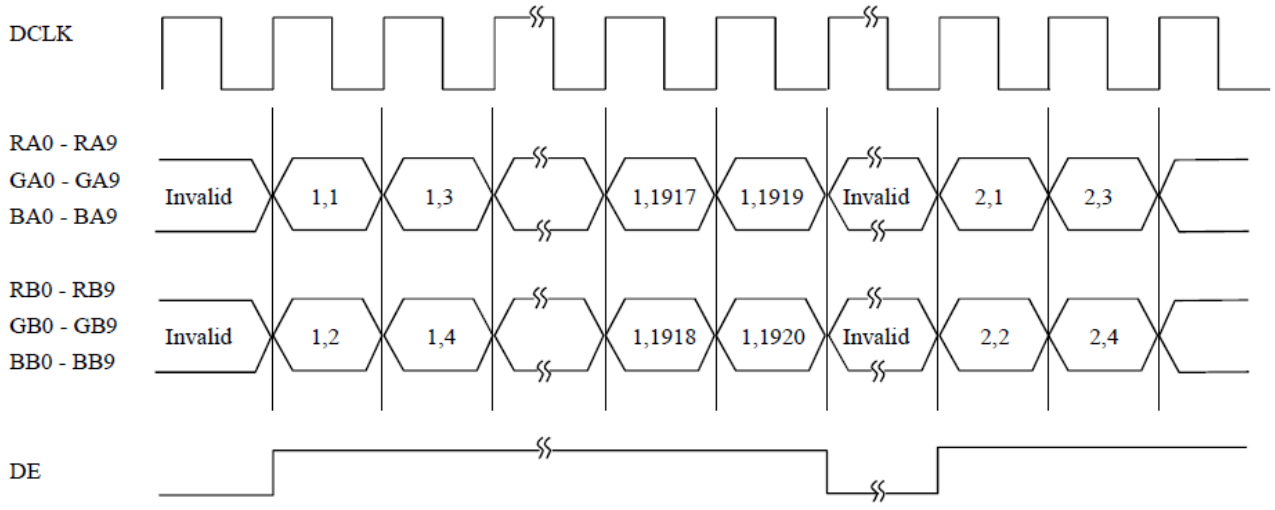

6.3 Relationship between display colors and input signals

Color	Input	Red Data										Green Data										Blue Data									
		R9	R8	R7	R6	R5	R4	R3	R2	R1	R0	G9	G8	G7	G6	G5	G4	G3	G2	G1	G0	B9	B8	B7	B6	B5	B4	B3	B2	B1	B0
		MSB									LSB	MSB									LSB	MSB									LSB
Basic Color	Black	0	0	0	0	0	0	0	0	0	0	0	0	0	0	0	0	0	0	0	0	0	0	0	0	0	0	0	0	0	0
	Red(1023)	1	1	1	1	1	1	1	1	1	1	0	0	0	0	0	0	0	0	0	0	0	0	0	0	0	0	0	0	0	0
	Green(1023)	0	0	0	0	0	0	0	0	0	0	1	1	1	1	1	1	1	1	1	1	0	0	0	0	0	0	0	0	0	0
	Blue(1023)	0	0	0	0	0	0	0	0	0	0	0	0	0	0	0	0	0	0	0	0	1	1	1	1	1	1	1	1	1	1
	Cyan	0	0	0	0	0	0	0	0	0	0	1	1	1	1	1	1	1	1	1	1	1	1	1	1	1	1	1	1	1	1
	Magenta	1	1	1	1	1	1	1	1	1	1	0	0	0	0	0	0	0	0	0	0	1	1	1	1	1	1	1	1	1	1
	Yellow	1	1	1	1	1	1	1	1	1	1	1	1	1	1	1	1	1	1	1	1	0	0	0	0	0	0	0	0	0	0
	White	1	1	1	1	1	1	1	1	1	1	1	1	1	1	1	1	1	1	1	1	1	1	1	1	1	1	1	1	1	1
Red	Black	0	0	0	0	0	0	0	0	0	0	0	0	0	0	0	0	0	0	0	0	0	0	0	0	0	0	0	0	0	0
	Red (1)	0	0	0	0	0	0	0	0	0	1	0	0	0	0	0	0	0	0	0	0	0	0	0	0	0	0	0	0	0	0
	Red (2)	0	0	0	0	0	0	0	0	1	0	0	0	0	0	0	0	0	0	0	0	0	0	0	0	0	0	0	0	0	0
	:	:	:	:	:	:	:	:	:	:	:	:	:	:	:	:	:	:	:	:	:	:	:	:	:	:	:	:	:	:	:
	:	:	:	:	:	:	:	:	:	:	:	:	:	:	:	:	:	:	:	:	:	:	:	:	:	:	:	:	:	:	:
	Red(1022)	1	1	1	1	1	1	1	1	1	0	0	0	0	0	0	0	0	0	0	0	0	0	0	0	0	0	0	0	0	0
	Red(1023)	1	1	1	1	1	1	1	1	1	1	0	0	0	0	0	0	0	0	0	0	0	0	0	0	0	0	0	0	0	0
Green	Black	0	0	0	0	0	0	0	0	0	0	0	0	0	0	0	0	0	0	0	0	0	0	0	0	0	0	0	0	0	0
	Green (1)	0	0	0	0	0	0	0	0	0	0	0	0	0	0	0	0	0	0	0	1	0	0	0	0	0	0	0	0	0	0
	Green (2)	0	0	0	0	0	0	0	0	0	0	0	0	0	0	0	0	0	0	1	0	0	0	0	0	0	0	0	0	0	0
	:	:	:	:	:	:	:	:	:	:	:	:	:	:	:	:	:	:	:	:	:	:	:	:	:	:	:	:	:	:	:
	:	:	:	:	:	:	:	:	:	:	:	:	:	:	:	:	:	:	:	:	:	:	:	:	:	:	:	:	:	:	:
	Green(1022)	0	0	0	0	0	0	0	0	0	0	1	1	1	1	1	1	1	1	1	0	0	0	0	0	0	0	0	0	0	0
	Green(1023)	0	0	0	0	0	0	0	0	0	0	1	1	1	1	1	1	1	1	1	1	0	0	0	0	0	0	0	0	0	0
Blue	Black	0	0	0	0	0	0	0	0	0	0	0	0	0	0	0	0	0	0	0	0	0	0	0	0	0	0	0	0	0	0
	Blue (1)	0	0	0	0	0	0	0	0	0	0	0	0	0	0	0	0	0	0	0	0	0	0	0	0	0	0	0	0	0	1
	Blue (2)	0	0	0	0	0	0	0	0	0	0	0	0	0	0	0	0	0	0	0	0	0	0	0	0	0	0	0	0	1	0
	:	:	:	:	:	:	:	:	:	:	:	:	:	:	:	:	:	:	:	:	:	:	:	:	:	:	:	:	:	:	:
	:	:	:	:	:	:	:	:	:	:	:	:	:	:	:	:	:	:	:	:	:	:	:	:	:	:	:	:	:	:	:
	Blue (1022)	0	0	0	0	0	0	0	0	0	0	0	0	0	0	0	0	0	0	0	0	1	1	1	1	1	1	1	1	1	0
	Blue (1023)	0	0	0	0	0	0	0	0	0	0	0	0	0	0	0	0	0	0	0	0	1	1	1	1	1	1	1	1	1	1

Note 1) Definition of gray scale :
Color(n)Number in parenthesis indicates gray scale level.
Larger n corresponds to brighter level.
Note2) Data : 1 : High, 0 : Low

6.4 LVDS receiver timing

6.4.1AC Characteristics

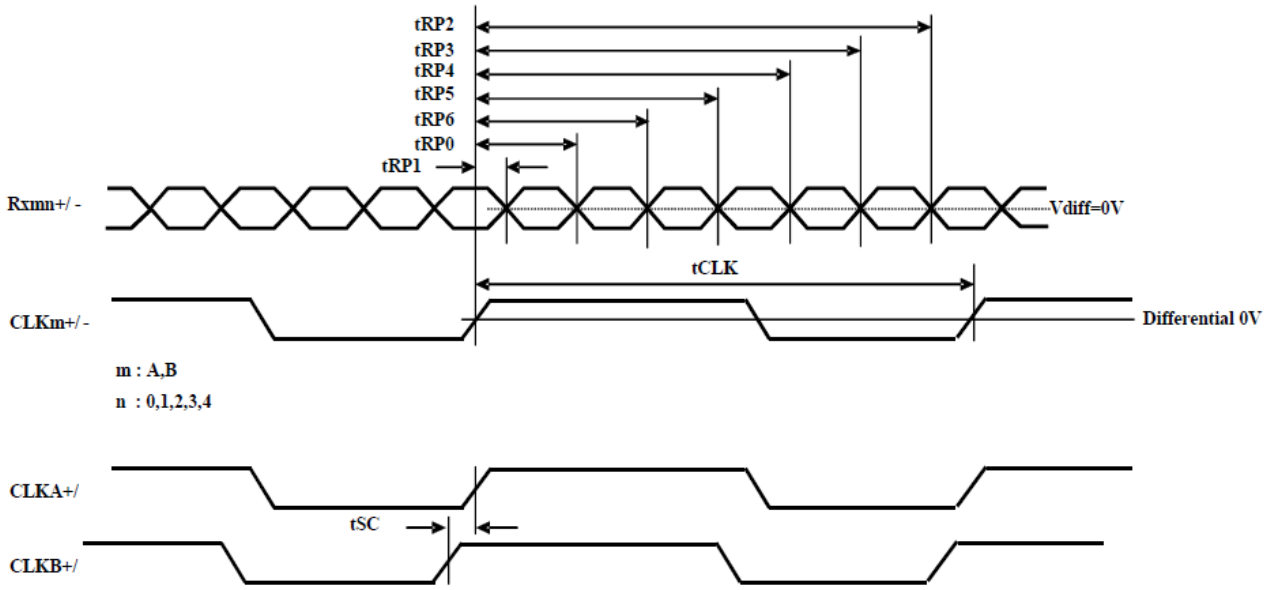

Symbol	Parameter	Min.	Typ	Max.	Unit
tCLK	CLK Period	7.69	12.99	16.67	ns
tRP1	Input data Position0	-0.30	0.0	0.3	ns
tRP0	Input data Position1	tCLK*1/7 - 0.3	tCLK*1/7	tCLK*1/7 + 0.3	ns
tRP6	Input data Position2	tCLK*2/7 - 0.3	tCLK*2/7	tCLK*2/7 + 0.3	ns
tRP5	Input data Position3	tCLK*3/7 - 0.3	tCLK*3/7	tCLK*3/7 + 0.3	ns
tRP4	Input data Position4	tCLK*4/7 - 0.3	tCLK*4/7	tCLK*4/7 + 0.3	ns
tRP3	Input data Position5	tCLK*5/7 - 0.3	tCLK*5/7	tCLK*5/7 + 0.3	ns
tRP2	Input data Position6	tCLK*6/7 - 0.3	tCLK*6/7	tCLK*6/7 + 0.3	ns

6.5 Input Signal Timing

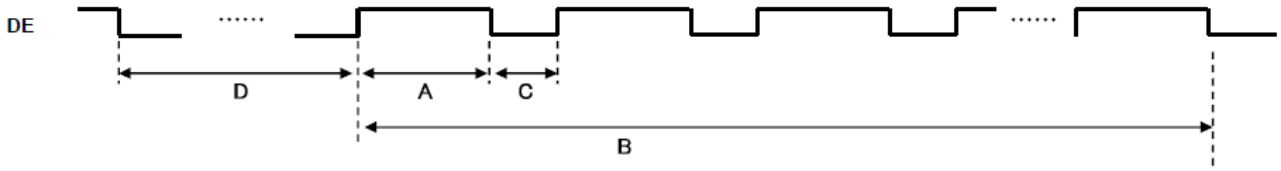

	Unit	Min.	Typ	Max.	Note
Horizontal Active (A)	clk		960		
Vertical Active (B)	H		1200		
Horizontal Blanking (C)	clk	30	80	200	
Vertical Blanking (D)	H	10	35	500	
Pixel Clock	MHz	60	77	130	
Horizontal Frequency (A+C)	kHz	55	74.1	110	
Horizontal Frequency Jitter	clk	-	-	4	within a frame
Vertical Frequency (B+D)	Hz	46*1)	60	87	

Please use it so that all ITEM matches specifications.
*1) Flicker is concerned. Please evaluate sufficiently.

6.6 DC Characteristics

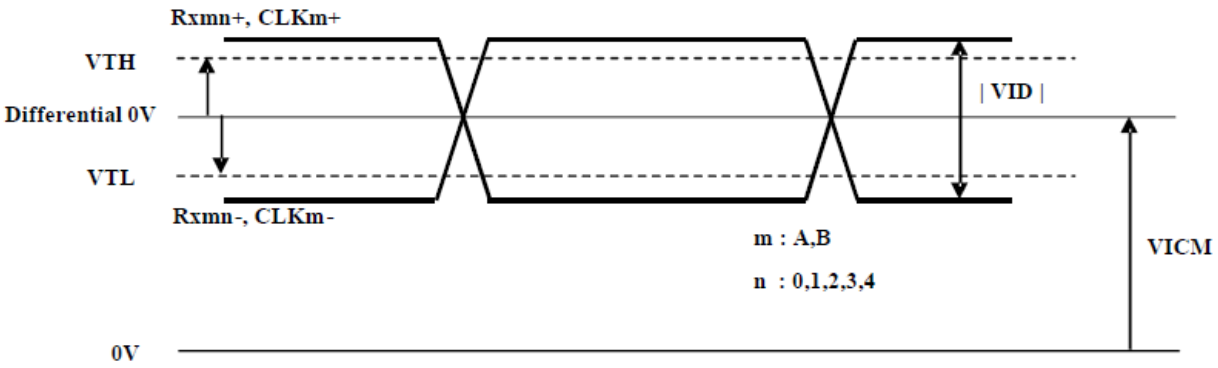

Symbol	Parameter	Conditions	Min.	Typ	Max.	Unit
VTH	Differential Input High Threshold	VICM = 1.2V	-	-	100	mV
VTL	Differential Input Low Threshold	VICM = 1.2V	-100	-	-	mV
| VID |	Input Differential Voltage		200	400	600	mV
VICM	Differential Input Common Mode Voltage		| VID | / 2	1.2	2.0 - | VID | / 2	V

6.7 Timing between interface signals power supply

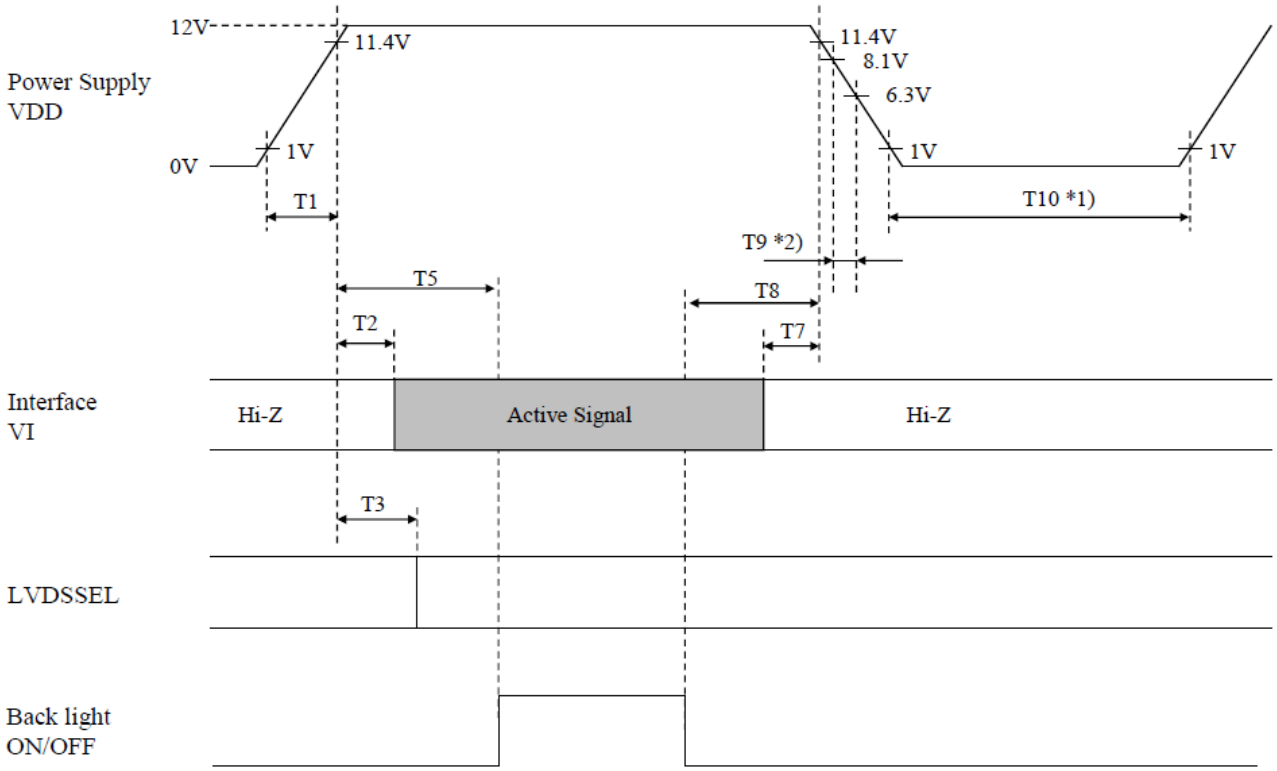

Parameter	Min.	Typ.	Max.	Units
T1	2	-	10	ms
T2	30	-	-	ms
T3	0	-	T2	ms
T5	600	-	-	ms
T6	0	-	-	ms
T8	20	-	-	ms
T9	20	-	-	ms
T10	2	-	-	ms

Note *1) There is a case that afterimage can be seen if this specification is not followed. However, as long as the afterimage can be allowed, it is tolerated.

Note*2) The T9 is recommended value. If T9 is shorter than the minimum specification, abnormal display might be shown. However, there is no malfunction.

7. OPTICAL CHARACTERISTIC

Item		Symbol	Condition		Values			Unit	Remark
					Min.	Typ.	Max.		
Viewing angle (Center CR≥10)		ΘR	Horizontal	Right	-	85	89	degree	Note 2
		ΘL		Left	-	85	89		
		ΦH	Vertical	Up	-	85	89		
		ΦL		Down	-	85	89		
Response Time	Rise	ton	Gray to Gray		-	10	20	msec	Note 4
	Fall	toff			-	8	20		
Contrast ratio		CR	Normal θ=Φ=0°		1000	1500	-	-	Note 3
Chromaticity		Rx	Center θx=θy =0°		Typ. -0.03	0.686	Typ. +0.03	-	Note 5
		Ry				0.312			
		Gx				0.218			
		Gy				0.721			
		Bx				0.148			
		By				0.048			
		Wx				0.304			
		Wy				0.316			
Luminance		L			285	320	-	cd/m²	Note 6
Luminance Uniformity		-	13 Points		75	-	-	%	Note 7

Note 1: Measurement method

The LCD module should be stabilized at given temperature for 30 minutes to avoid abrupt temperature change during measuring (at surface 35℃). In order to stabilize the luminance, the measurement should be executed after lighting Backlight for 30 minutes in a stable, windless and dark room.

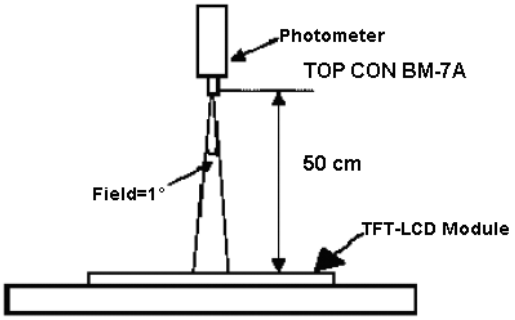

Note 2: Definition of viewing angle measured by TOPCON BM-7A
Horizontal view angle : Divide to left & right (ΘL & ΘR)
Vertical view angle : Divide to up & down (ΦH &ΦL

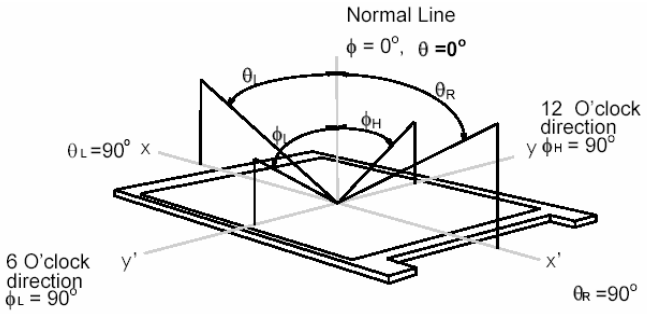

Note 3: Contrast ratio is measured by TOPCON BM-7A.

$$CR = \frac{\text{Luminance with all pixels in white state}}{\text{Luminance with all pixels in Black state}}$$

Note 4: Response time measurement

The output signals of photo detector are measured when the input signals are changed from "Gray level A" to "Gray level B" (falling time, TF), and from "Gray level B" to "Gray level A" (rising time, TR), respectively. The response time is interval between the 10% and 90% of optical response. The gray to gray response time is defined as the following table.

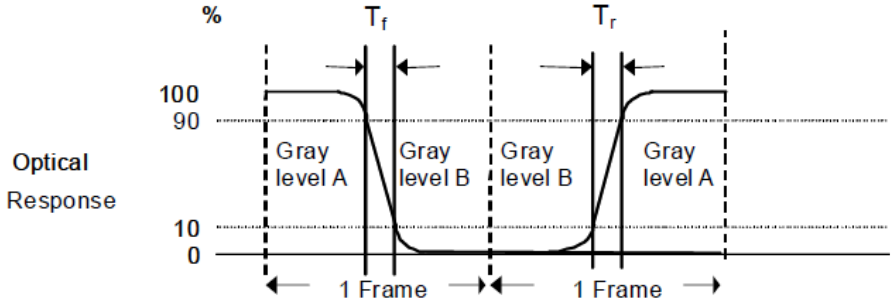

Gray Level to Gray Level		Target gray level				
		L0	L63	L127	L191	L255
Start gray level	L0					
	L63					
	L127					
	L191					
	L255					

T_{GTG_typ} is the total average time at rising time and falling time of gray to gray.

Note 5: Color chromaticity and coordinates (CIE) is measured by TOPCON BM-7A.
Note 6: Central luminance is measured by TOPCON BM-7A.
Note 7: Luminance uniformity of these 13 points is defined as below and measured by TOPCON BM-7A.
Maximum Luminance in 13 Points (1- 13) Uniformity

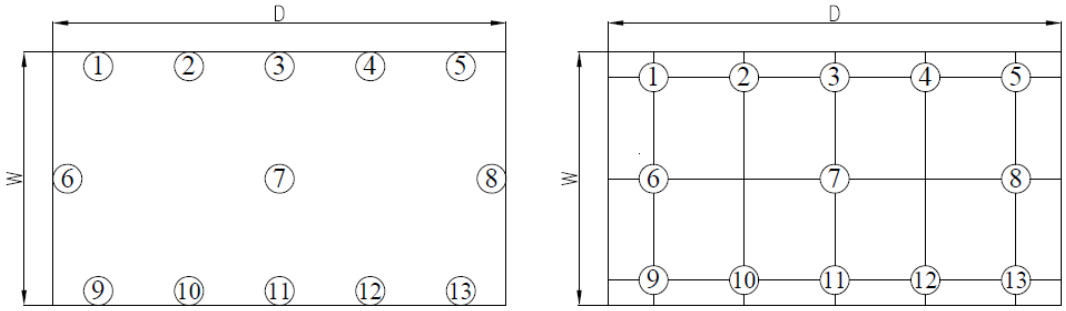

8. PIN CONNECTIONS

8.1 CN1 Pin Functions

Pin No.	Symbol	Function	Remark
1	GND	Ground	Note2
2	IC	Internally Connected, Keep Open	
3	IC	Internally Connected, Keep Open	
4	IC	Internally Connected, Keep Open	
5	IC	Internally Connected, Keep Open	
6	IC	Internally Connected, Keep Open	Note4
7	LVDSSEL	Select LVDS Data Format	
8	IC	Internally Connected, Keep Open	
9	NC	No Connection	
10	NC	No Connection	
11	GND	Ground	Note2
12	RxA0-	ODD Pixel Data	Note3
13	RxA0+	ODD Pixel Data	Note3
14	RxA1-	ODD Pixel Data	Note3
15	RxA1+	ODD Pixel Data	Note3
16	RxA2-	ODD Pixel Data	Note3
17	RxA2+	ODD Pixel Data	Note3
18	GND	Ground	Note2
19	CLKA-	ODD Pixel Clock	Note3
20	CLKA+	ODD Pixel Clock	Note3
21	GND	Ground	Note2
22	RxA3-	ODD Pixel Data	Note3
23	RxA3+	ODD Pixel Data	Note3
24	RxA4-	ODD Pixel Data	Note3
25	RxA4+	ODD Pixel Data	Note3
26	GND	Ground	Note2
27	GND	Ground	Note2
28	RxB0-	EVEN Pixel Data	Note3
29	RxB0+	EVEN Pixel Data	Note3
30	RxB1-	EVEN Pixel Data	Note3
31	RxB1+	EVEN Pixel Data	Note3
32	RxB2-	EVEN Pixel Data	Note3
33	RxB2+	EVEN Pixel Data	Note3
34	GND	Ground	Note2
35	CLKB-	EVEN Pixel Clock	Note3
36	CLKB+	EVEN Pixel Clock	Note3
37	GND	Ground	Note2
38	RxB3-	EVEN Pixel Data	Note3
39	RxB3+	EVEN Pixel Data	Note3
40	RxB4-	EVEN Pixel Data	Note3
41	RxB4+	EVEN Pixel Data	Note3
42	GND	Ground	Note2

43	GND	Ground	Note2
44	GND	Ground	Note2
45	GND	Ground	Note2
46	GND	Ground	Note2
47	NC	No Connection	
48	VLCD	Power Supply (typ.+12V)	Note1
49	VLCD	Power Supply (typ.+12V)	Note1
50	VLCD	Power Supply (typ.+12V)	Note1
51	VLCD	Power Supply (typ.+12V)	Note1

Note 1) All VLCD pins shall be connected to +12.0V(Typ.).
Note2) All GND pins shall be grounded. Metal bezel is internally connected to GND.
Note3) Rx n+ and Rx n- (n=0,1,2,3,4) should be wired by twist-pairs or side-by-side FPC patterns, respectively.
Note4) See page 8-3/5

8.2JST PHR-7

Pin No.	DESCRIPTION	Remark
1	Anode2	
2	No connection	
3	Cathode2-1	
4	No connection	
5	Cathode2-2	
6	No connection	
7	Cathode2-3	

8.3 CN3:JST PHR-7

Pin No.	DESCRIPTION	Remark
1	Anode3	
2	No connection	
3	Cathode3-1	
4	No connection	
5	Cathode3-2	
6	No connection	
7	Cathode3-3	

●LB internal wiring diagram

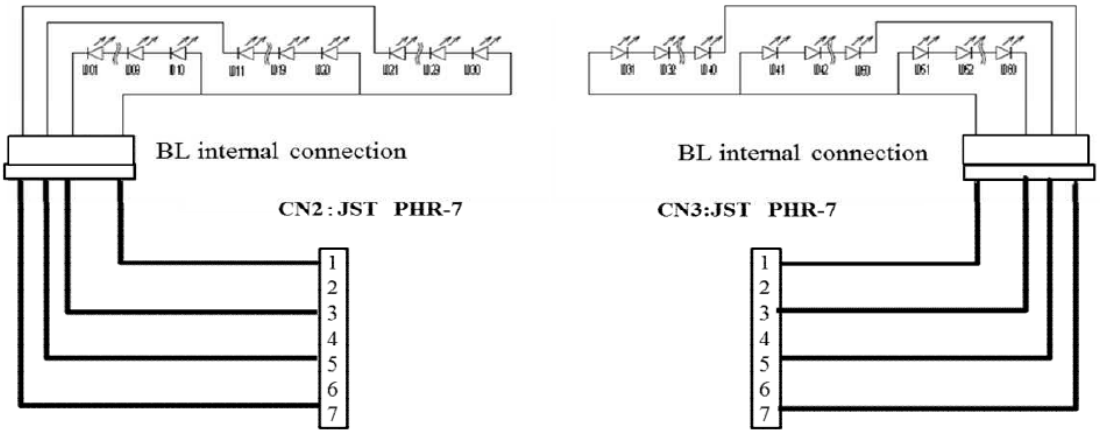

9. BLOCK DIAGRAM

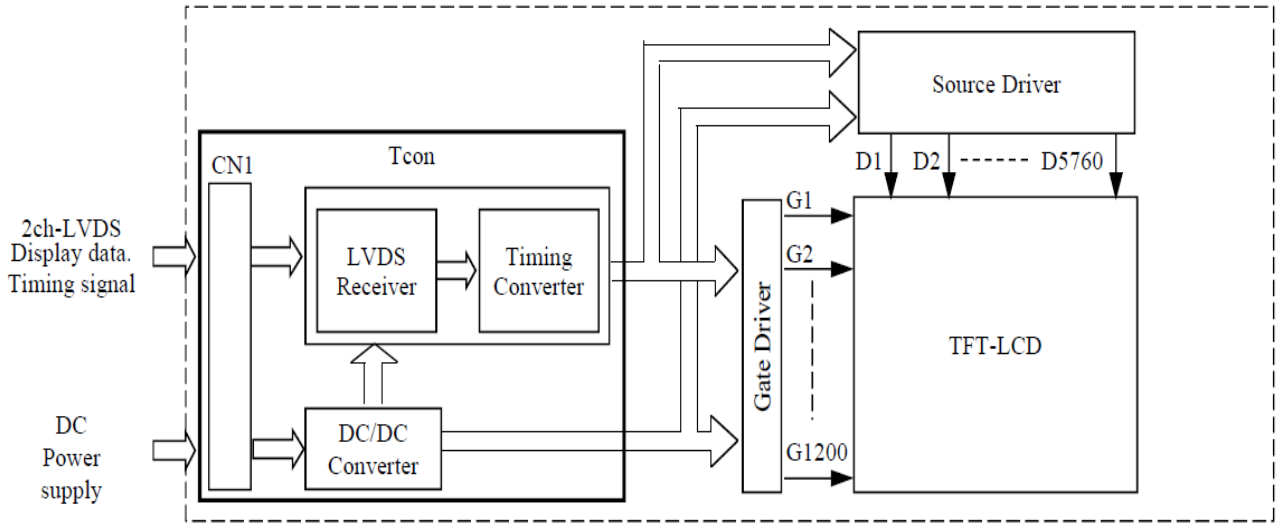

10. QUALITY ASSURANCE

10.1 Test Condition

10.1.1 Temperature and Humidity(Ambient Temperature)

Temperature : 25 ± 5°C
Humidity : 65 ± 5%

10.1.2 Operation

Unless specified otherwise, test will be conducted under function state.

10.1.3 Container

Unless specified otherwise, vibration test will be conducted to the product itself without putting it in a container.

10.1.4 Test Frequency

In case of related to deterioration such as shock test. It will be conducted only once.

10.1.5 Test Method

Reliability Test Item & Level			Remark
No.	Test Item	Test Level	
1	High Temperature Storage Test	Ta=70°C,240hrs	IEC60068-2-2
2	Low Temperature Storage Test	Ta=-20°C,240hrs	IEC60068-2-1
3	High Temperature Operation Test	Ta=45°C,240hrs	IEC60068-2-2
4	Low Temperature Operation Test	Ta=0°C,240hrs	IEC60068-2-1
5	High Temperature and High Humidity (No operation)	T=40°C,80%RH,240hrs	IEC60068-2-3
6	Thermal Cycling Test (No operation)	-25/70℃ 100cy 30min./30min	IEC60068-2-14
7	Vibration test (Package)	Frequency:10~55HZ Amplitude:1.5mm Sweep time:11min Test period:6Cycles for each direction of X,Y,Z	IEC60068-2-6
8	Drop test (Package)	Height :60cm 1 conner,3edges,6surfaces	IEC60068-2-32
9	Electrostatic Discharge Test	State: operating Location: LCM/TP surface Condition:150pf 330Ω Contact +/- 8kV Air +/-15kV Criteria: Class C	IEC61000-4-2

10.2 Inspection condition

10.2.1 Inspection conditions

10.2.1.1 Inspection Distance : 35 cm

10.2.1.2 View Angle :

(1) Inspection under operating condition : 0°-30°

(2) Inspection under non-operating condition : 0°-30°

10.2.1.3 Appearance inspection time: ≦ 15 second

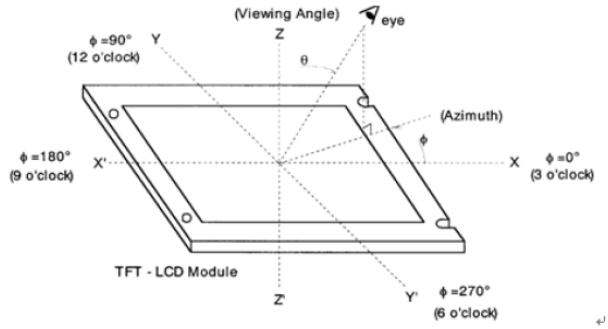

Figure 1: Viewing angle description

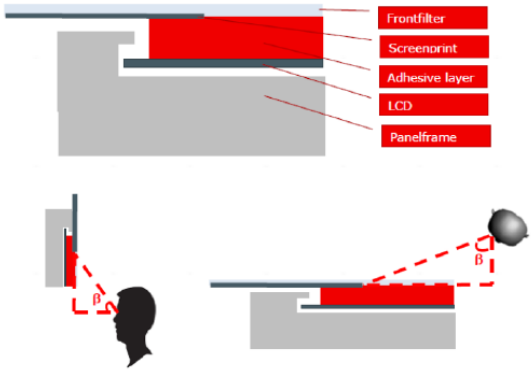

10.2.2 Environment conditions :

Ambient Temperature :		25±5℃
Ambient Humidity :		65±5%
Ambient Illumination	Cosmetic Inspection	820 ~ 1290lux
	Functional Inspection	300 ~ 500lux

10.2.3 Definition of applicable Zones

Area	Inspection Area
A	front of the screen
B	Edge, Screen Edge, Four sides and back side

10.2.4Inspection Parameters

Appearance and Functional Inspection Criteria (D: diameter, L: length; W: width, Z: height, T: glass thickness, n：number)

<table>
<tr><th>Inspection item</th><th>Inspection standard</th><th>Description</th></tr>
<tr><td>No image</td><td>Prohibited</td><td></td></tr>
<tr><td>Image abnormal</td><td>Prohibited</td><td></td></tr>
<tr><td>Line defect</td><td>Prohibited</td><td>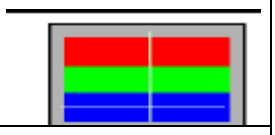</td></tr>
<tr><td>Mura</td><td colspan="2">It is acceptable that the defect can not be seen with 2% ND filter.</td></tr>
<tr><td>Light leakage inspection</td><td colspan="2">It is required to be inspected in the dark room with dark pattern， edge brightness <0.8 Cd/m², other area brightness < 0.7 Cd/m²; display port signal is used for measurement.</td></tr>
<tr><td>Dot
(NOTE1)</td><td>
<table>
<tr><td rowspan="2">Item</td><td>Acceptable</td></tr>
<tr><td>Visible area</td></tr>
<tr><td>Bright dot</td><td>0</td></tr>
<tr><td>Small Bright dot（R/G/B）</td><td>14</td></tr>
<tr><td>Dark dot</td><td>4</td></tr>
<tr><td>Dark adjacent dots</td><td>2</td></tr>
</table>
</td><td>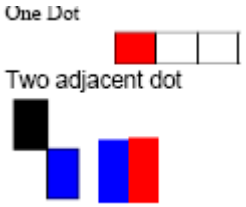
</td></tr>
<tr><td>Foreign material in dot shape
(NOTE5)</td><td>
<table>
<tr><td>Area</td><td>SPEC (unit: mm)</td><td>Acceptable</td></tr>
<tr><td rowspan="4">A/B</td><td>D≦ 0.2</td><td>Ignored</td></tr>
<tr><td>0.2<D≦ 0.4 distance >10cm</td><td>5</td></tr>
<tr><td>0.4<D≦ 0.6 distance >10cm</td><td>3</td></tr>
<tr><td>D＞0.6</td><td>0</td></tr>
</table>
</td><td>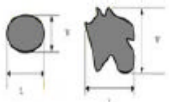
</td></tr>
<tr><td>Foreign material in line shape
(NOTE4)</td><td>
<table>
<tr><td>Area</td><td>SPEC(unit: mm)</td><td>Acceptable</td></tr>
<tr><td rowspan="3">A/B</td><td>W≤0.05， distance >10cm</td><td>3</td></tr>
<tr><td>0.05 < W≤0.1, L≤10 distance >10cm</td><td>2</td></tr>
<tr><td>W > 0.1， L > 10</td><td>0</td></tr>
</table>
</td><td>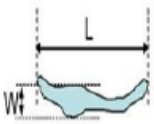
</td></tr>
<tr><td>Scratch
(NOTE4)</td><td>
<table>
<tr><td>Area</td><td>SPEC (unit: mm)</td><td>Acceptable</td></tr>
<tr><td rowspan="3">A/B</td><td>W≤0.05， distance >10cm</td><td>3</td></tr>
<tr><td>0.05 < W≤0.1, L≤10 distance >10cm</td><td>2</td></tr>
<tr><td>W > 0.1， L > 10</td><td>0</td></tr>
</table>
</td><td>
</td></tr>
<tr><td>Bubbles
(NOTE5)</td><td>
<table>
<tr><td>Area</td><td>SPEC (unit: mm)</td><td>Acceptable</td></tr>
<tr><td rowspan="3">A</td><td>D≦0.2</td><td>7</td></tr>
<tr><td>0.2 < D≤0.5</td><td>4</td></tr>
<tr><td>D＞0.5</td><td>0</td></tr>
</table>
</td><td>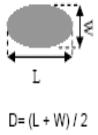
</td></tr>
</table>

<table>
<tr><td>Crack</td><td>Prohibited</td><td>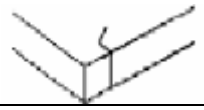</td></tr>
<tr><td>Cover edge break/ angle missing</td><td>Prohibited</td><td>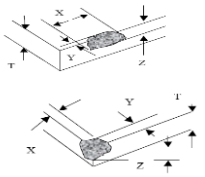</td></tr>
<tr><td>Tape exposed</td><td>
<table>
<tr><td>Area</td><td>SPEC (unit: mm)</td><td>Acceptable</td></tr>
<tr><td>A</td><td>Prohibited</td><td>0</td></tr>
</table>
</td><td></td></tr>
<tr><td>Water marks</td><td>
<table>
<tr><td>Area</td><td>SPEC (unit: mm)</td><td>Acceptable</td></tr>
<tr><td>A</td><td>Prohibited</td><td>0</td></tr>
</table>
</td><td></td></tr>
<tr><td>Ink</td><td>
<table>
<tr><td>SPEC (unit: mm)</td><td>Acceptable</td></tr>
<tr><td>word unclear, inverted, mistake, break line</td><td>0</td></tr>
</table>
</td><td></td></tr>
<tr><td>Function</td><td>Prohibited</td><td></td></tr>
</table>

Note:1.(a)Bright Dark point defect is defined as point defect of R,G,B with area >1/2 dot respectively

(b) Incomplete Bright point： < 1/2dot bright area is defined as incomplete bright point.

(c)Definition of distribution of point defect is as follows:

-minumum separation between dark point defects should be larger than 15mm..

Note:2 The external inspection should be conducted at the distance 35± 5cm between the eyes of inspctor and the panel .

Note:3 Luminance measurement for contrast ratio is at the distance 50± 5cm between the detective head and the panel with ambient illuminance less than 1 lux. Contrast ratio is obtained at optimum view angle.

Note:4 W-Width in mm , L-length of Max.(L1,L2) in mm.



Note:5 Spot Foreign Material (W≧L/4)

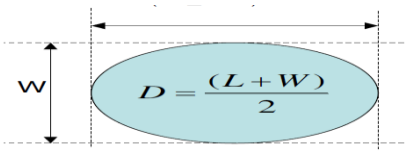

Note:6 The corlor that reflected on the surface should be according to sample

Note:7 The defect is not counted(means ignore) no matter the distance

Note:8 The ripple SPEC should be judged according to sample

Note:9 Foreign materail（dot scratch）judgement: it can be judged as OK if within the scope of dot shape.

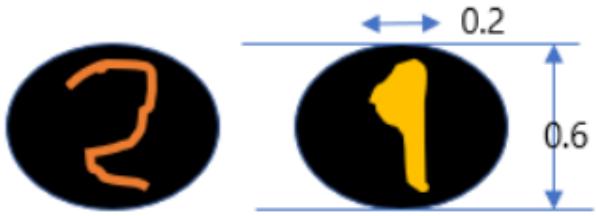

Note:10 10 There is an invisible disconnection in one line, or the disconnected line can be seen from another angle of refraction.

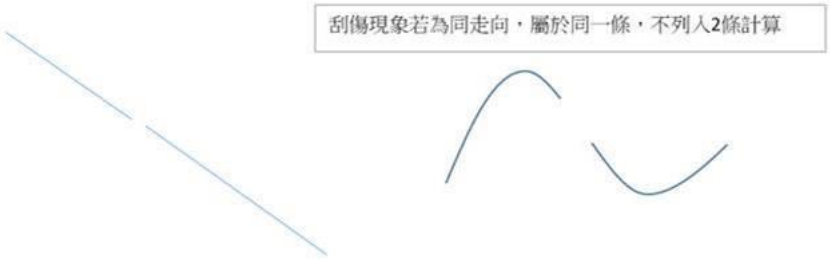

10.2.5 Sampling Condition

Unless otherwise agree in written, the sampling inspection shall be applied to the incoming inspection of customer.
Lot size: Quantity of shipment lot per model.
Sampling type: normal inspection, single sampling
Sampling table: MIL-STD-105E

Inspection level: Level II

	Definition	
Class of defects	AQL 0.65%	It is a defect that is likely to result in failure or to reduce materially the usability of the product for the intended function.
	AQL 1.5%	It is a defect that will not result in functioning problem with deviation classified.

11. LCM PRODUCT LABEL DEFINE

Product Label style:



BarCode Define:

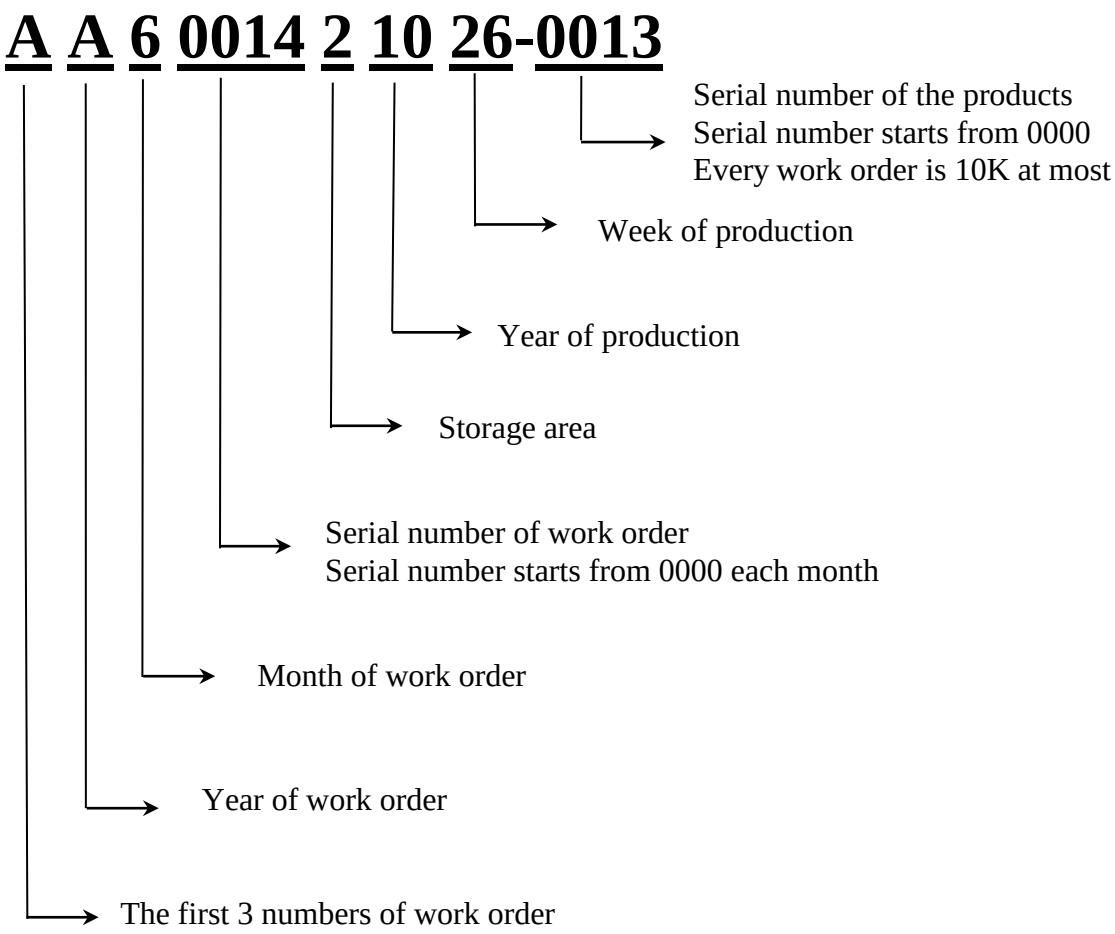

Product Name Define:

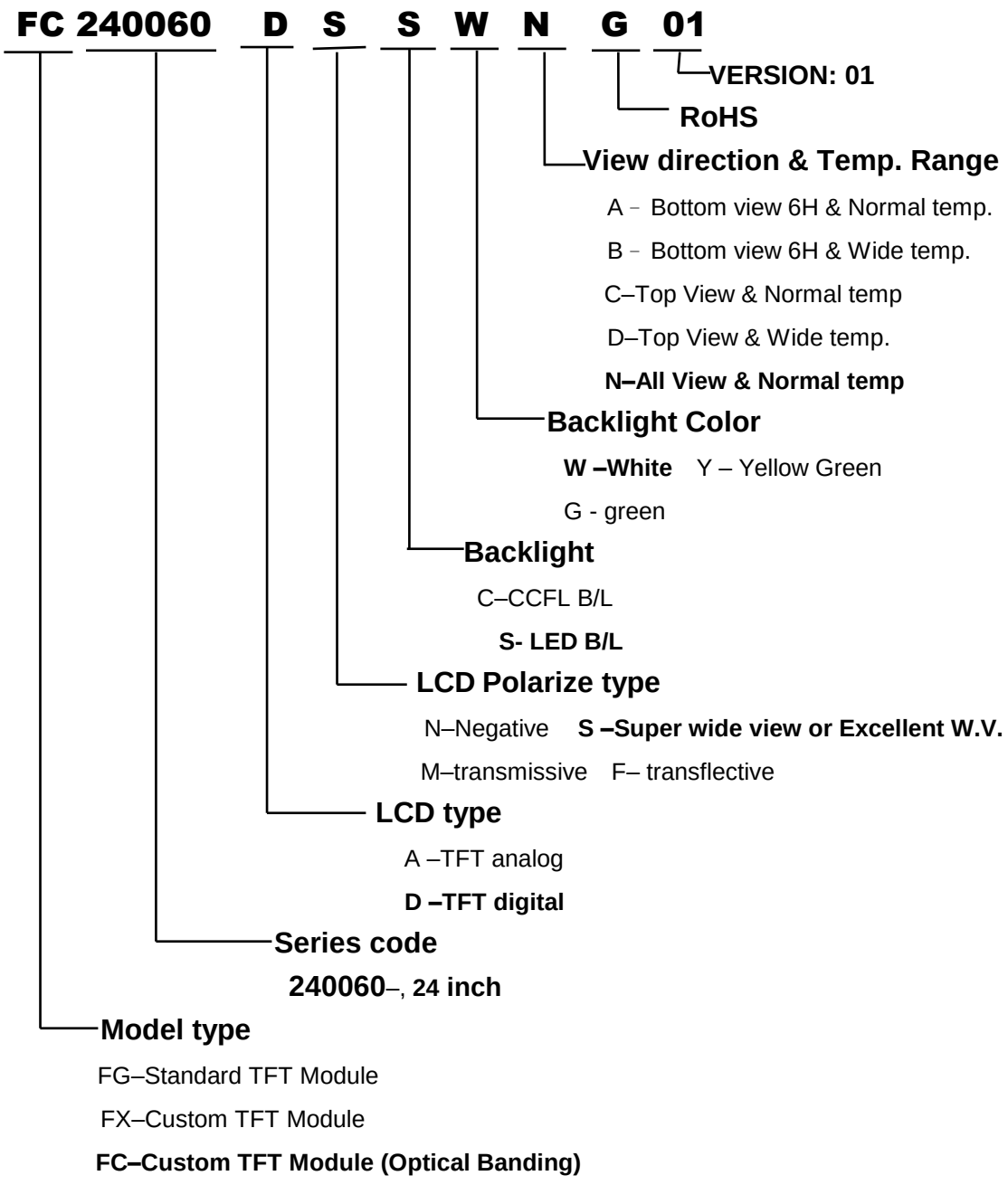

12. PRECAUTION IN USE LCM

1. ASSEMBLY PRECAUTIONS
   (1) You must mount a module using holes arranged in four corners or four sides.
   (2) You should consider the mounting structure so that uneven force (ex. Twisted stress) is not applied to the module. And the case on which a module is mounted should have sufficient strength so that external force is not transmitted directly to the module.
   (3) Do not touch, push or rub the exposed polarizers with glass, tweezers or anything harder than HB pencil lead. And please do not rub with dust clothes with chemical treatment.
   (4) Wipe off saliva or water drops as soon as possible. Their long time contact with polarizer causes deformations and color fading.
   (5) Do not open the case because inside circuits do not have sufficient strength.
   (6) Please do not take a LCD module to pieces and reconstruct it. Resolving and reconstructing modules may cause them not to work well.
   (7) Please do not touch metal frames with bare hands and soiled gloves. A color change of the metal frames can happen during a long preservation of soiled LCD modules.
   (8) Please pay attention to handling lead wire of backlight so that it is not tugged in connecting with inverter.

2. OPERATING PRECAUTIONS
   (1) Please be sure to turn off the power supply before connecting and disconnecting signal input cable.
   (2) Please do not change variable resistance settings in LCD module. They are adjusted to the most suitable value. If they are changed, it might happen LCD does not satisfy the characteristics specification
   (3) Be careful for condensation at sudden temperature change. Condensation makes damage to polarizer or electrical contacted parts. And after fading condensation, smear or spot will occur.
   (4) When fixed patterns are displayed for a long time, remnant image is likely to occur.
   (5) Module has high frequency circuits. Sufficient suppression to the electromagnetic interference shall be done by system manufacturers. Grounding and shielding methods may be important to minimize the interference.
   (6) Please consider that LCD backlight takes longer time to become stable of radiation characteristics in low temperature than in room temperature.

3. ELECTROSTATIC DISCHARGE CONTROL
   (1) The operator should be grounded whenever he/she comes into contact with the module. Never touch any of the conductive parts such the copper leads on the PCB and the interface terminals with any parts of the human body.
   (1) The modules should be kept in antistatic bags or other containers resistant to static for storage.
   (2) Only properly grounded soldering irons should be used.
   (3) If an electric screwdriver is used, it should be well grounded and shielded from commutator sparks.
   (4) The normal static prevention measures should be observed for work clothes and working benches; for the latter conductive (rubber) mat is recommended
   (5) Since dry air is inductive to statics, a relative humidity of 50-60% is recommended.

4. STORAGE PRECAUTIONS
   (1) When you store LCDs for a long time, it is recommended to keep the temperature between 0°C-40°C without the exposure of sunlight and to keep the humidity less than 90%RH.
   (2) Please do not leave the LCDs in the environment of high humidity and high temperature such as 60°C 90%RH
   (3) Please do not leave the LCDs in the environment of low temperature; below -20°C.

5. OTHERS
   (1) A strong incident light into LCD panel might cause display characteristics' changing inferior because of polarizer film, color filter, and other materials becoming inferior. Please do not expose LCD module direct sunlight Land strong UV rays
   (2) Please pay attention to a panel side of LCD module not to contact with other materials in preserving it alone.
   (3) For the packaging box, please pay attention to the followings:
      a. Please do not pile them up more than 5 boxes. (They are not designed so.) And please do not turn over.
      b. Please handle packaging box with care not to give them sudden shock and vibrations. And also please do not throw them up.
      c. Packing box and inner case for LCDs are made of cardboard. So please pay attention not to get them wet. (Such like keeping them in high humidity or wet place can occur getting them wet.)
   (4) Waste
      Liquid crystal module products shall not be arbitrarily discarded; the water and soil have a negative impact on the environment, the need to be handled by a qualified unit.

6. LIMITED WARRANTY

Unless otherwise agreed between DATA IMAGE and customer, DATA IMAGE will replace or repair any of its LCD and LCM which is found to be defective electrically and visually when inspected in accordance with DATA IMAGE acceptance standards, for a period on one year from date of shipment. Confirmation of such date shall be based on freight documents. The warranty liability of DATA IMAGE is limited to repair and/or replacement on the terms set forth above. DATA IMAGE will not responsible for any subsequent or consequential events.

13. OUTLINE DRAWING

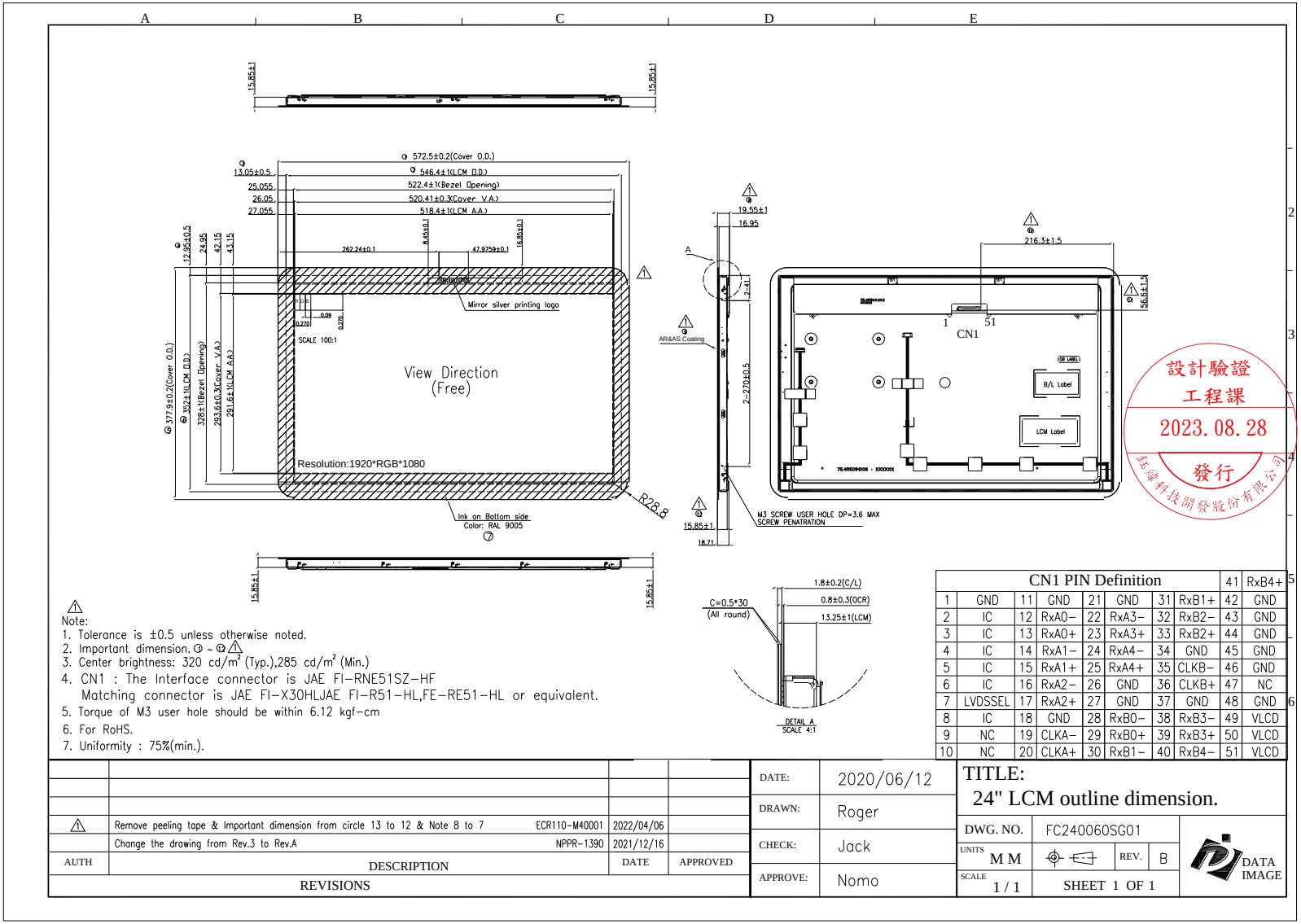

Note:
1. Tolerance is ±0.5 unless otherwise noted.
2. Important dimension. ① ~ ⑫ ⚠
3. Center brightness: 320 cd/m² (Typ.),285 cd/m² (Min.)
4. CN1 : The Interface connector is JAE FI-RNE51SZ-HF
   Matching connector is JAE FI-X30HLJAE FI-R51-HL,FE-RE51-HL or equivalent.
5. Torque of M3 user hole should be within 6.12 kgf-cm
6. For RoHS.
7. Uniformity : 75%(min.).

CN1 PIN Definition									
1	GND	11	GND	21	GND	31	RxB1+	41	RxB4+
2	IC	12	RxA0-	22	RxA3-	32	RxB2-	43	GND
3	IC	13	RxA0+	23	RxA3+	33	RxB2+	44	GND
4	IC	14	RxA1-	24	RxA4-	34	GND	45	GND
5	IC	15	RxA1+	25	RxA4+	35	CLKB-	46	GND
6	IC	16	RxA2-	26	GND	36	CLKB+	47	NC
7	LVDSSEL	17	RxA2+	27	GND	37	GND	48	GND
8	IC	18	GND	28	RxB0-	38	RxB3-	49	VLCD
9	NC	19	CLKA-	29	RxB0+	39	RxB3+	50	VLCD
10	NC	20	CLKA+	30	RxB1-	40	RxB4-	51	VLCD

設計驗證 工程課 2023.08.28 發行 達擎科技開發股份有限公司

REVISIONS			
AUTH	DESCRIPTION	DATE	APPROVED
⚠	Remove peeling tape & Important dimension from circle 13 to 12 & Note 8 to 7 ECR110-M40001	2022/04/06	
	Change the drawing from Rev.3 to Rev.A NPPR-1390	2021/12/16	

DATE:	2020/06/12
DRAWN:	Roger
CHECK:	Jack
APPROVE:	Nomo

TITLE: 24" LCM outline dimension.

DWG. NO.	FC240060SG01		
UNITS M M		REV.	B
SCALE 1 / 1	SHEET 1 OF 1		

DATA IMAGE

2AAD539013T(T0184)

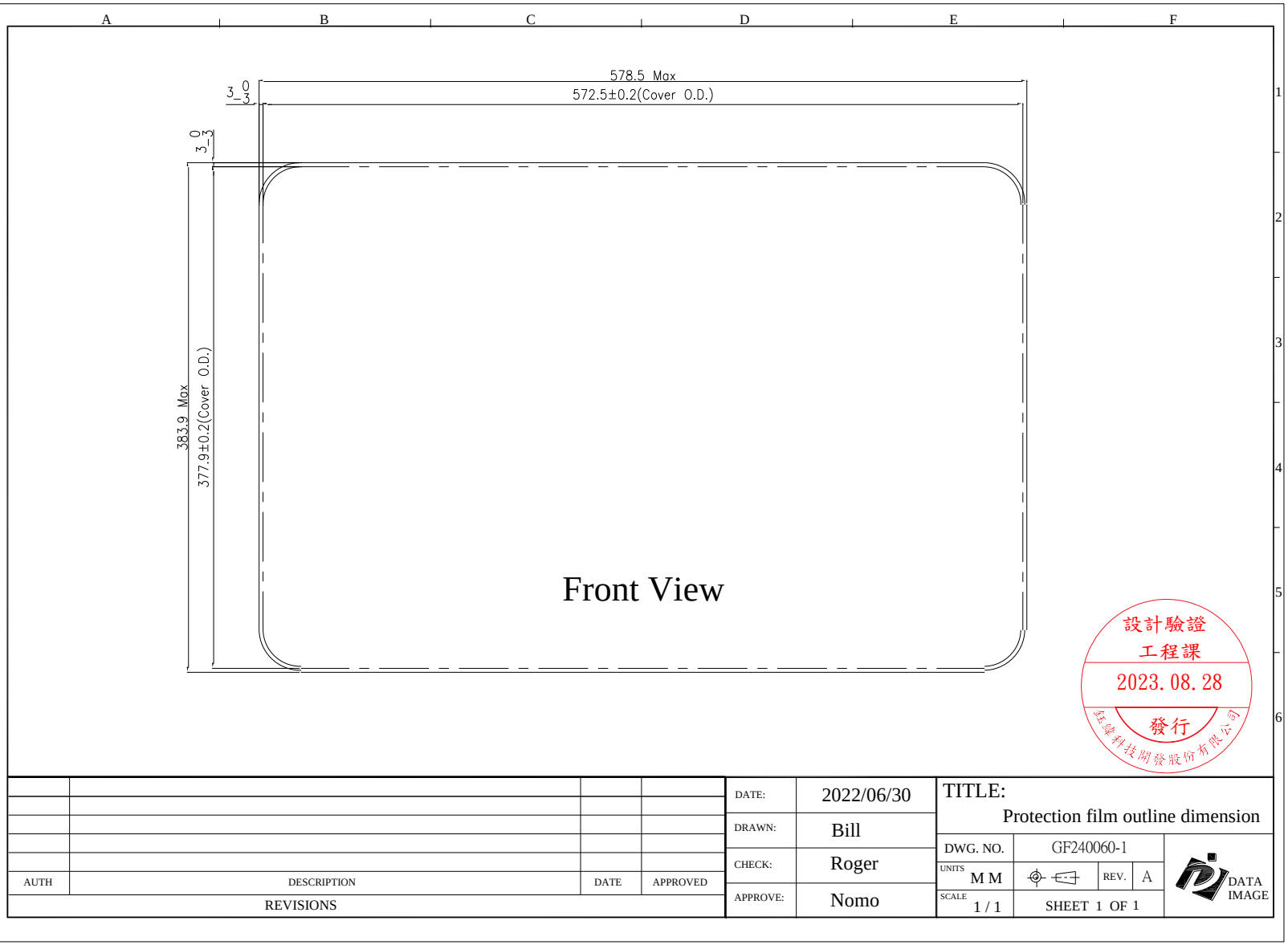

AUTH	DESCRIPTION	DATE	APPROVED
REVISIONS			

DATE:	2022/06/30
DRAWN:	Bill
CHECK:	Roger
APPROVE:	Nomo

TITLE: Protection film outline dimension

DWG. NO.	GF240060-1		
UNITS M M		REV.	A
SCALE 1 / 1	SHEET 1 OF 1		

DATA IMAGE

2AAD539013T(T0184)

14. PACKAGE INFORMATION

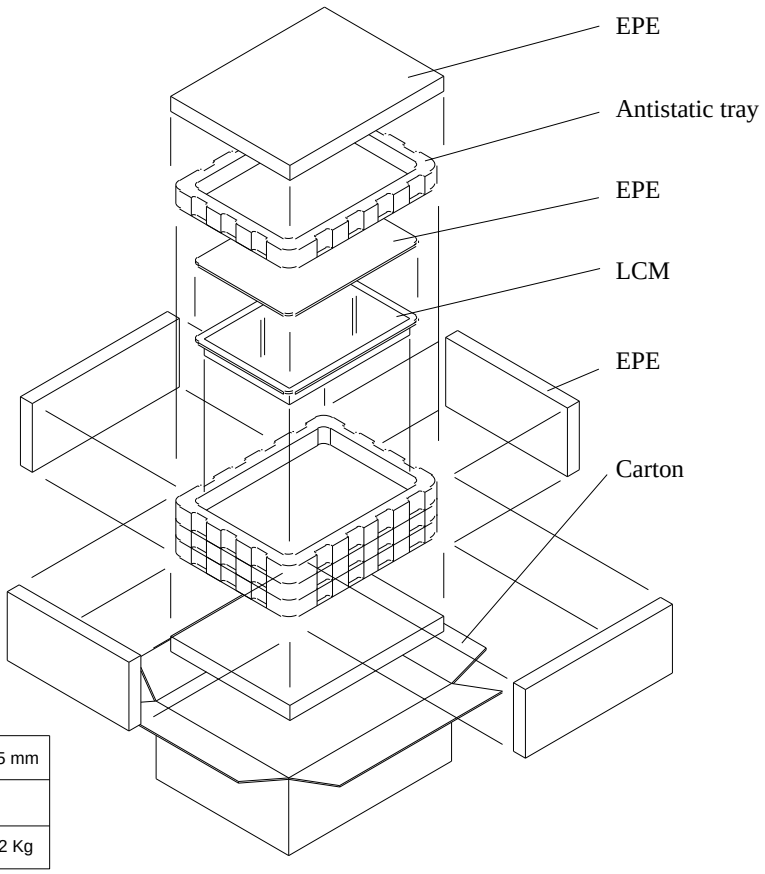

CARTON SIZE		805*548*215 mm	
QUANTITY PER CARTON		3 pcs	
N.W.	11.6 Kg	G.W.	16.2 Kg