DATA IMAGE CORPORATION

ITEM NO.: FC240070DSSWNG01 2AAD539023T(T0194)

☐Prototype ☐Pre-prod. ■Mass prod. Specification

Table of Contents

1. COVER & CONTENTS ····· 1
2. RECORD OF REVISION ····· 2
3. GENERAL SPECIFICATIONS ····· 3
4. ABSOLUTE MAXIMUM RATINGS ····· 3
5. ELECTRICAL CHARACTERISTICS ····· 4
6. INPUT SIGNAL CHARACTERISTICS ····· 7
7. OPTICAL CHARACTERISTIC ····· 11
8. PIN CONNECTIONS ····· 14
9. BLOCK DIAGRAM ····· 15
10. QUALITY ASSURANCE ····· 16
11. LCM PRODUCT LABEL DEFINE····· 21
12. PRECAUTIONS IN USE LCM ····· 23
13. OUTLINE DRAWING ····· 24
14 PACKAGE INFORMATION····· 26

Customer Companies	QA Approved	DQA Check	R&D Approved	R&D Check
	pretty	Andy	Roger	Amanda
Customer Approved by	Version:	Issued Date:	Total Pages:	Prepared
設計驗證 工程課 2023.08.28 發行	F	16/AUG/23'	26	Candy

2. RECORD OF REVISION

Rev	Date	Item	Page	Comment	Source
1	15/JUL/20'	AII 13	AII 24	Initial Preliminary Modify Outline Drawing from Rev.1 to 2 2)Modify dimension 13.04->13.05/19.8->19.75/17.2->17.15/ 134.5->133.5/411.3->411.25/60->59.96(mm) Add dimension:13.16±1mm	ESR0907001
2	9/DEC/20'	7 10.2 14	12 17~20 25	Modify Note 5 from 9 points to 13 points Modify IIS Add PACKAGE INFORMATION	ESR0907001
3	24/MAY/21'	11	21	Modify Label Size	NPDO-2178
4	03/NOV/21'	3 14	3 25	Add Weight Modify PACKAGE INFORMATION	ESR0907001
A	16/MAY/22'	3 5.1.1 5.2.2 6.3.1 7 13 14	3 4 6 8 11 24 25	Add Weight Add Irush Max Value Modify PLED Typ & Max Value & LED Lifetime & Backlight input signal characteristics Modify Timing Characteristics Modify R,G,B Chromaticity Modify Outline Drawing from Rev. 2 to B A)Change the drawing from Rev.2 to Rev. A. B)Remove peeling tape & important dimension from circle 10 to 9 & Add Note 5 Add PACKAGE INFORMATION Release Rev: A for production	NPPR-1389 ECR110-M40001
B	21/JUL/22'	13	25	Add GF240060-1 Outline	ECR110-M40001
C	12/AUG/22'	3 7 11 13	3 11 24	Modify Display Format Modify Viewing Angle Modify Outline Drawing from Rev. B to C C)Modify resolution:1920*RGB*1200 to resolution:1920*RGB *1080	ECR110-M40001
D	27/APR/23'	10.2.4	18	Modify IIS	ECR110-N40009
E	10/MAY/23'	13	24	Modify Outline Drawing from Rev. C to D D)Add tape & unplug the coble	ECR110-N50013
F	16/AUG/23'	10.2.4	18~20	Modify IIS	ECR110-N70014

3. GENERAL SPECIFICATIONS

Parameter	Specifications	Unit
Screen Size	24 (diagonal)	inch
Display Format	1920(H) x (R,G,B) x1080(V)	dot
Outline Dimension	572.5(H) x 377.9(V) x 19.75(D)	mm
Active Area	518.4(H) x 291.6(V)	mm
Pixel Pitch	0.270(H) x 0.270(V)	mm
Pixel Configuration	R.G.B. Vertical Stripe	
Display Mode	AHVA mode, Normally Black	
Surface treatment	AR&AS Coating	
Back-light	LED	
View Direction	All	
Weight	3860	g
Our components and processes are compliant to RoHS & REACH & Halogen Free standard		

4. ABSOLUTE MAXIMUM RATINGS

Parameter	Symbol	MIN.	MAX.	Unit	Remark
Logic/LCD Drive Voltage	V_{DD}	-0.3	16.5	V	Note1,2
Operating Temperature	Top	0	50	°C	
Storage Temperature	Tst	-20	60	°C	
Operation Humidity	Tst	5	90	%RH	
Storage Humidity	Hst	5	90	%RH	

Note 1: With in Ta (25 °C)
Note 2: Permanent damage to the device may occur if exceed maximum values
Note 3: For quality performance, please refer to IIS (Incoming Inspection Standard).

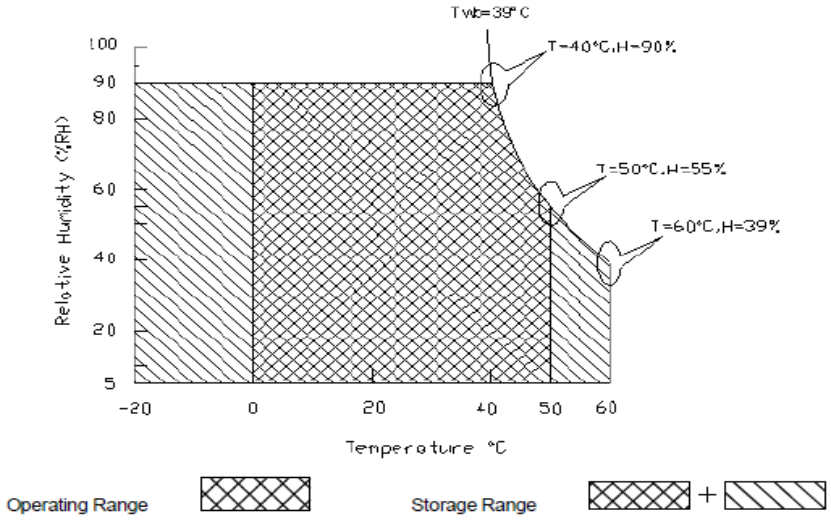

5. ELECTRICAL CHARACTERISTICS

5.1 TFT LCD Module

5.1.1 Power Specification

Input power specifications are shown as follows

Item	Symbol	Min.	Typ.	Max.	Unit	Remark
VDD	Logic/LCD Drive Voltage	10.8	12.0	13.2	V	+/-10%
IDD	VDD Current	-	(0.7)	(0.9)	A	Vin=12V, White Pattern, at 60Hz
Irush	LCD Inrush Current	-	-	3	A	Note1
PDD	VDD Power	-	8.4	10.8	W	Vin=12V, White Pattern, at 60Hz
VDDrp	Allowable Logic/LCD Drive Ripple Voltage	-	-	300	[mV]p-p	With panel loading

Note1：Measurement conditions:

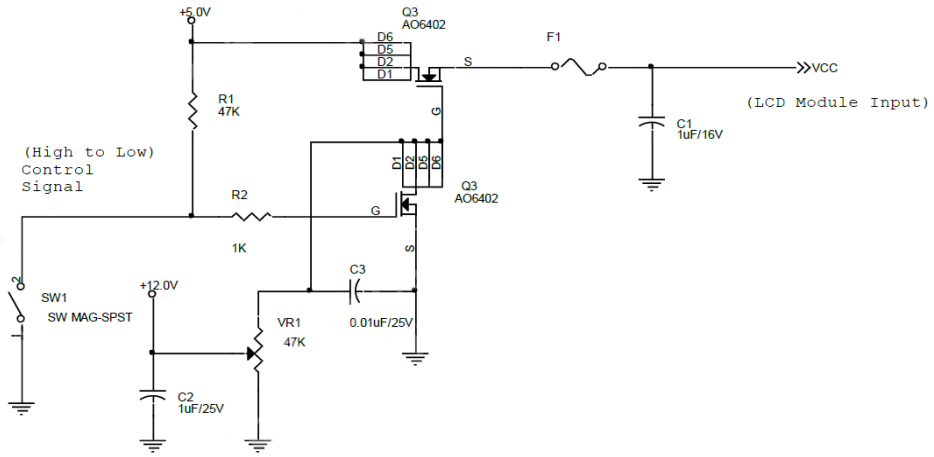

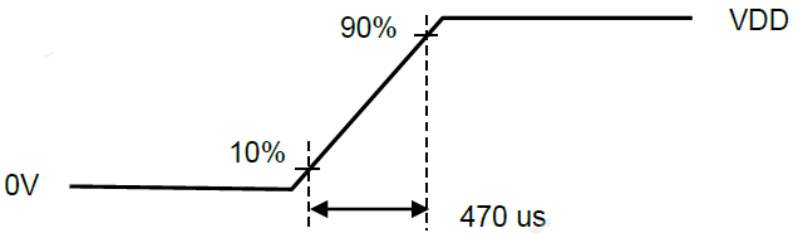

VDD rising time

5.1.2 LVDS DC Signal Electrical Characteristics

Input signals shall be low or Hi-Z state when VDD is off

Item	Symbol	Min.	Typ.	Max.	Unit	Remark
Differential Input High Threshold	VTH	-	-	+100	mV	VICM = 1.2V
Differential Input Low Threshold	VTL	-100	-	-	mV	
Input Differential Voltage	| VID |	100	-	600	mV	
Differential Input Common Mode Voltage	VICM	+1.0	+1.2	+1.5	V	VTH/VTL=+-200mV

Note 1: LVDS Signal Waveform

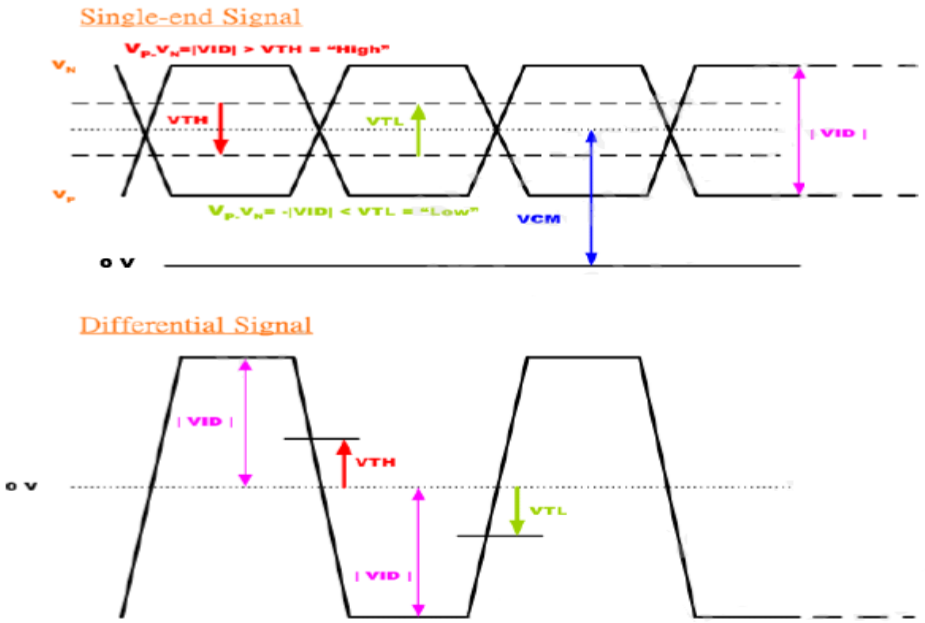

5.2 Backlight Unit

5.2.1 LED Backlight Unit : Driver Connector

Pin No.	Symbol	Function	Note
1	VDD	LED Power Supply(Typ +24V)	Note1
2	VDD	LED Power Supply(Typ +24V)	Note1
3	VDD	LED Power Supply(Typ +24V)	Note1
4	VDD	LED Power Supply(Typ +24V)	Note1
5	VDD	LED Power Supply(Typ +24V)	Note1
6	GND	Ground	Note2
7	GND	Ground	Note2
8	GND	Ground	Note2
9	GND	Ground	Note2
10	GND	Ground	Note2
11	NC	Do not connect	
12	On/Off	High: LED ON(3.3V); Low: LED OFF	
13	IC	Internally Connected, Keep Open	
14	PWM	PWM; duty 10%~100%	

Note1:AII VDD LED power pins shall be connected to+24.0V(typ.)
Note2:AII GND pins shall be grounded Metal bezel is internally connected to GND

5.2.2 Parameter guideline for LED

Following characteristics are measured under a stable condition using an inverter at 25℃ (Room Temperature):

LED characteristics

Item	Symbol	Min.	Typ.	Max.	Unit	Remark
LED Power Consumption	PLED	-	16.38	18.5	W	IF =65 mA, Ta= 25℃
LED Lifetime	LTLED	50,000	-	-	Hrs	IF =65 mA, Ta= 25℃

Note 1: Calculator value for reference PLED = VF (Normal Distribution) * IF (Normal Distribution) /Efficiency
Note 2: The LED life-time define as the estimated time to 50% degradation of initial luminous

Backlight input signal characteristics

Item	Symbol	Min.	Typ.	Max.	Unit	Remark
Input Voltage	VDD	19.0	24.0	31.0	V	
Input Current	I_{VDD}	-	0.8	-	A	100% PWM Duty
Power Consumption	P_{VDD}	-	19.2	21.84	W	100% PWM Duty
Inrush Current	Irush LED	-	-	6	A	at rising time=470us
Dimming Frequency	F_{PWM}	0.1	0.2	20	kHZ	
Swing Voltage		3	3.3	5	V	
Dimming Duty 200~5K		5	-	100	%	
Dimming Duty 5K~20K		15	-	100	%	
LED Forward Current	I_F	-	65	-	mA	Ta = 25℃
LED Forward Voltage	V_F	-	-	-	V	
		-	36	40.8	V	I_F=65mA, Ta= 25℃
		-	-	-		

Note1: Measured on panel VLED

6. INTERFACE SPECIFICATIONS

6.1 Pixel Format Image

Following figure shows the relationship between input signal and LCD pixel format

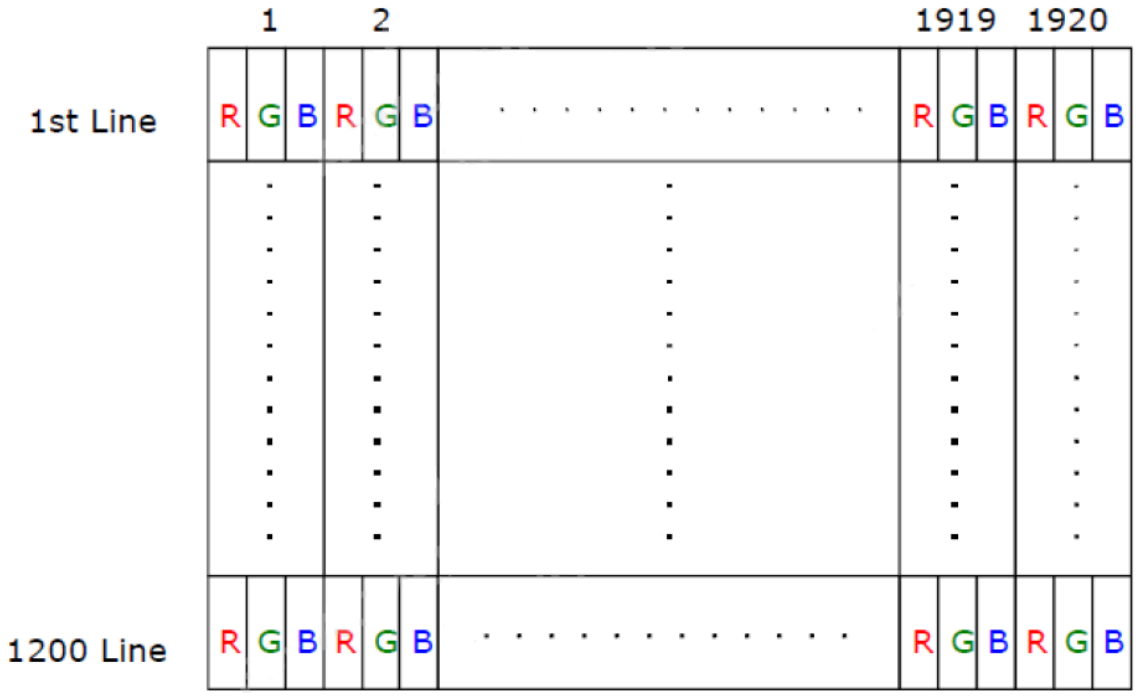

6.2 The Input Data Format

Data Mapping of JEIDA Format

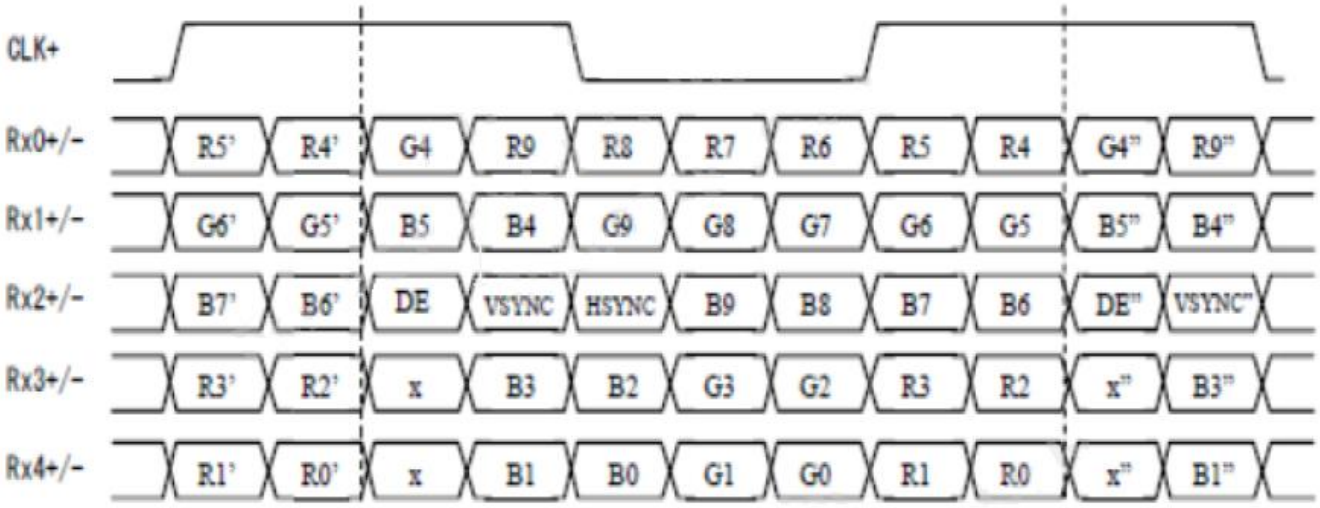

6.3Interface Timing

6.3.1Timing Characteristics

Signal		Symbol	Min.	Typ.	Max.	Unit
Clock Frequency		$1/T_{Clock}$	59.5	77	85	MHz
Vertical Section	Period	T_V	1214	1235	1734	T_{Line}
	Active	T_{VD}	1200	1200	1200	T_{Line}
	Blanking	T_{VB}	14	35	534	T_{Line}
Horizontal Section	Period	T_H	1000	1040	1428	T_{Clock}
	Active	T_{HD}	960	960	960	T_{Clock}
	Blanking	T_{HB}	40	80	468	T_{Clock}
Frame Rate		F	49	60	66	Hz

Note: DE mode only.

6.3.2 Input Timing Diagram

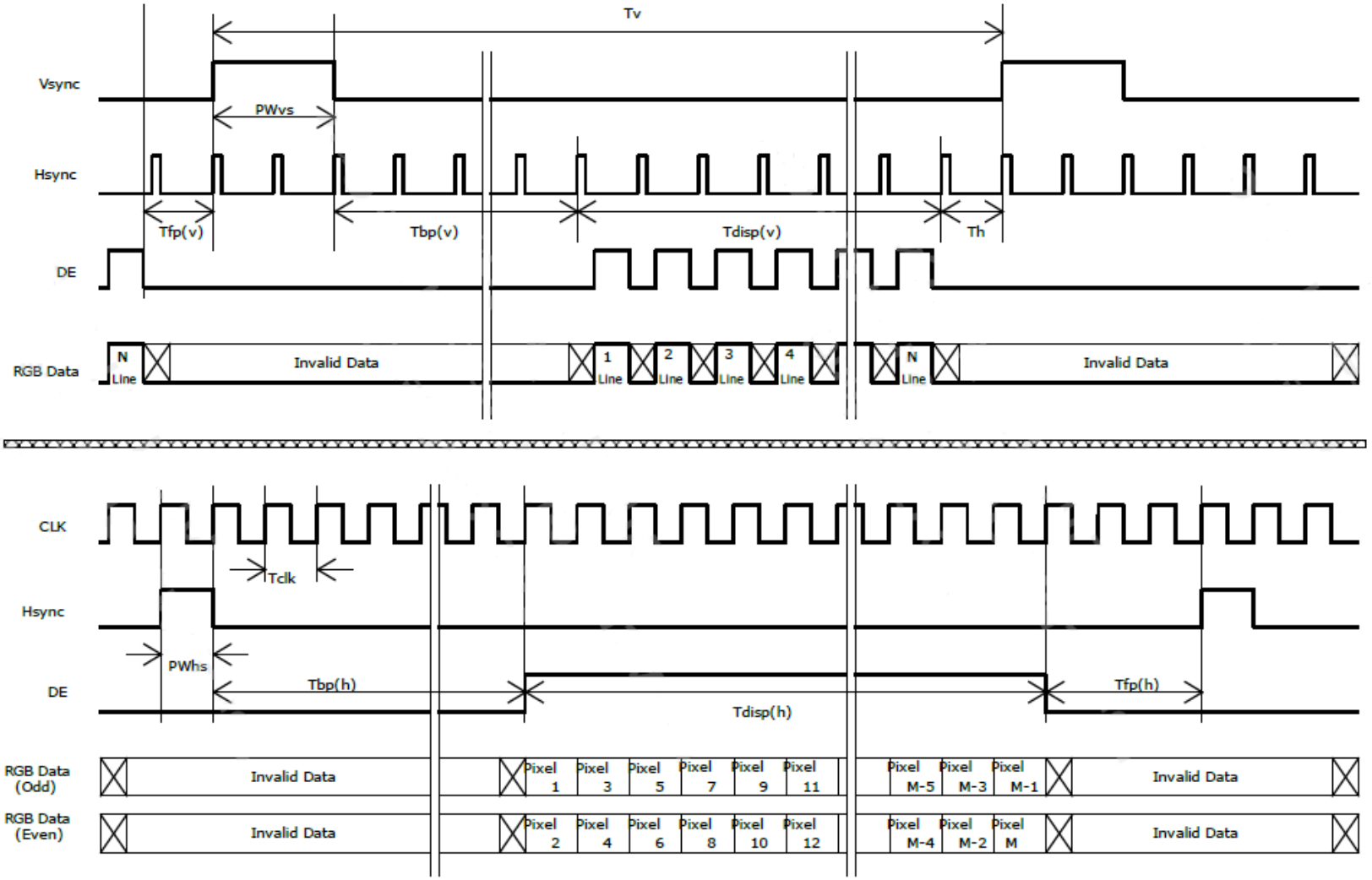

6.4 Power ON/OFF Sequence

VDD power and lamp on/off sequence is as below. Interface signals are also shown in the chart.
Signals from any system shall be Hi-Z state or low level when VDD is off.

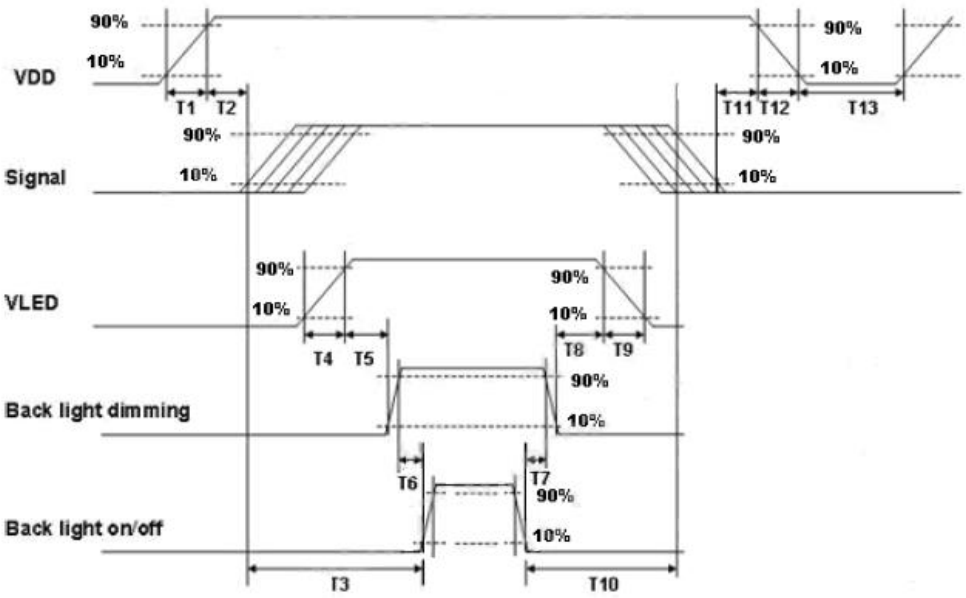

Power ON/OFF sequence timing

Parameter	Value				Remark
	Min.	Typ.	Max.	Units	
T1	0.5	-	10	ms	
T2	30	40	50	ms	
T3	200	-	-	ms	
T4	0.5	-	10	ms	
T5	10	-	-	ms	
T6	10	-	-	ms	
T7	0	-	-	ms	
T8	10	-	-	ms	
T9	-	-	10	ms	
T10	110	-	-	ms	
T11	0	16	50	ms	
T12	0	-	10	ms	
T13	1000	-	-	ms	

The above on/off sequence should be applied to avoid abnormal function in the display. Please make sure to turn off the power when you plug the cable into the input connector or pull the cable out of the connector.

7. OPTICAL CHARACTERISTIC

Parameter		Symbol	Condition	MIN.	TYP.	MAX.	Unit	Remarks
Viewing Angle	Horizontal	θ_x+	Center CR≥10	--	85	89	deg	Note 1,4
		θ_x-		--	85	89		
	Vertical	θ_Y+		--	85	89		
		θ_Y-		--	85	89		
Contrast Ratio		CR	at optimized viewing angle	1260	1800	--		Note 1,3
Response time	Rise+ Fall	Tr+ Tf	Center θx=θy =0°	-	22	--	ms	Note 1,6
Uniformity		B-uni	θx=θy =0°	75	-	--	%	Note1,5
LCM Brightness		L	θx=θy =0°	320	400	--	cd/㎡	Note 1,2
Chromaticity		x_W	Center θx=θy =0°	Typ. -0.05	0.313	Typ. +0.05		Note 1,7
		y_W			0.329			
		x_R			0.689			
		y_R			0.309			
		x_G			0.212			
		y_G			0.730			
		x_B			0.146			
		y_B			0.061			

The following optical specifications shall be measured in a darkroom or equivalent state (ambient luminance ≤1 lux, and at room temperature). The operation temperature is 25°C±2°C. The measurement method is shown in Note1.

Note 1: The method of optical measurement:

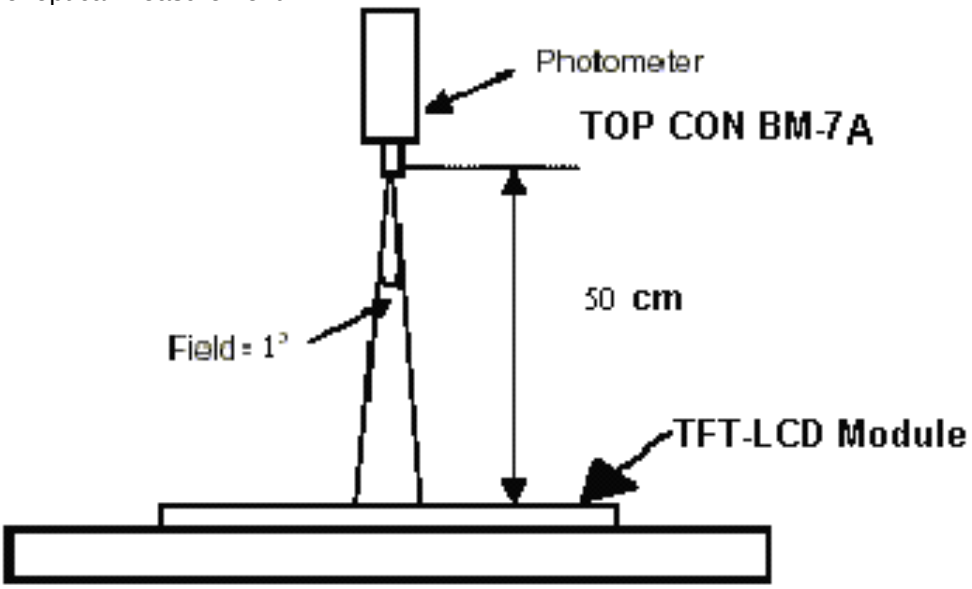

Note 2: Measured at the center area of the panel and at the viewing angle of the θx=θy =0°

Note 3: Definition of Contrast Ratio (CR):

$$CR = \frac{\text{Luminance with all pixels in white state}}{\text{Luminance with all pixels in Black state}}$$

Note 4: Definition of Viewing Angle

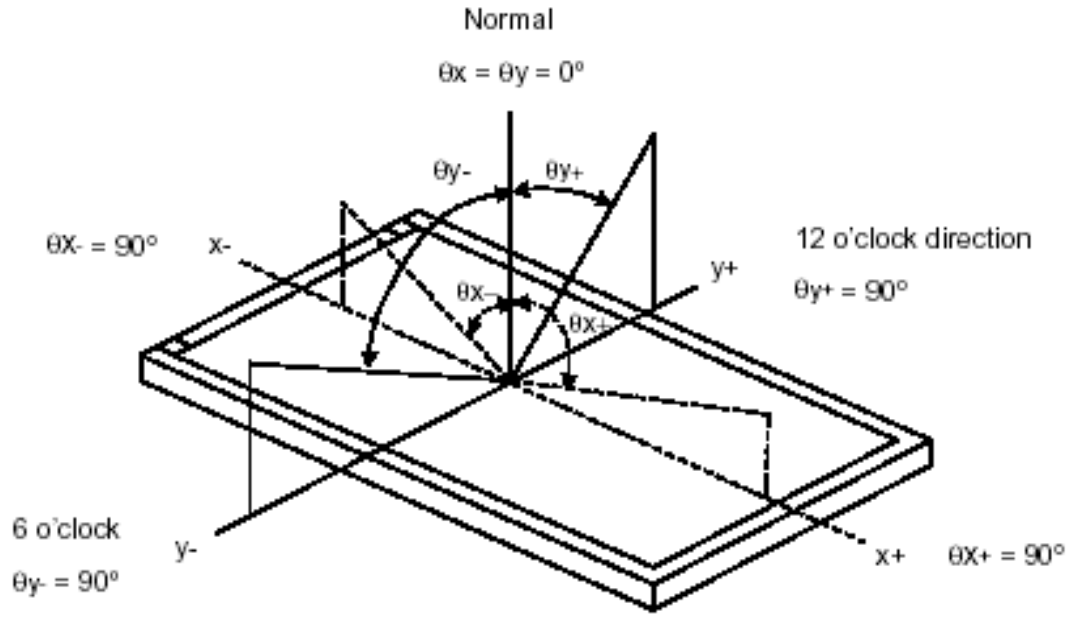

Note 5: Definition of Brightness Uniformity (B-uni):

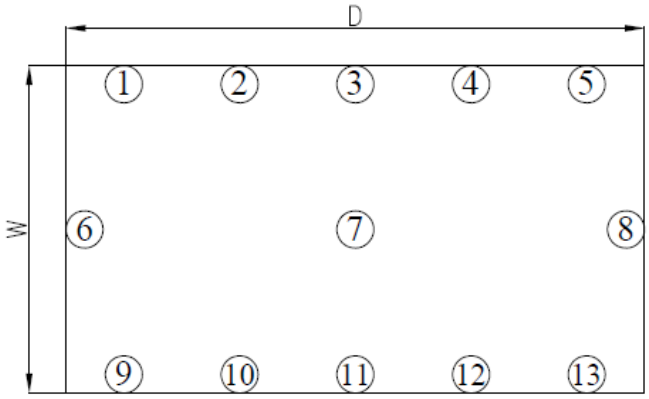

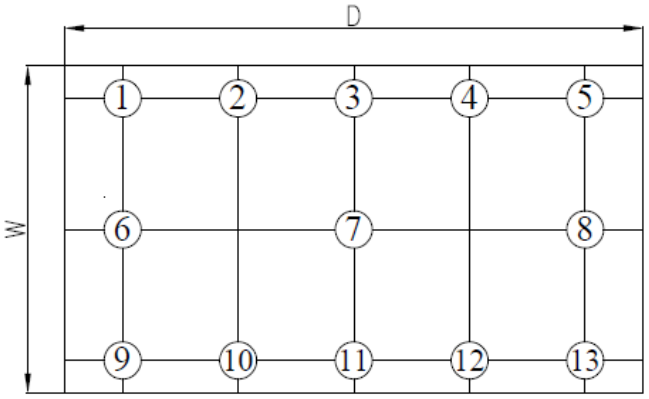

$$\text{B-uni} = \frac{\text{Minimum luminance of 13 points}}{\text{Maximum luminance of 13 points}}$$ (Note 5).

Note 6: Definition of Response Time:

The Response Time is set initially by defining the “Rising Time (Tr)” and the “Falling Time (Tf)” respectively. Tr and Tf are defined as following figure.

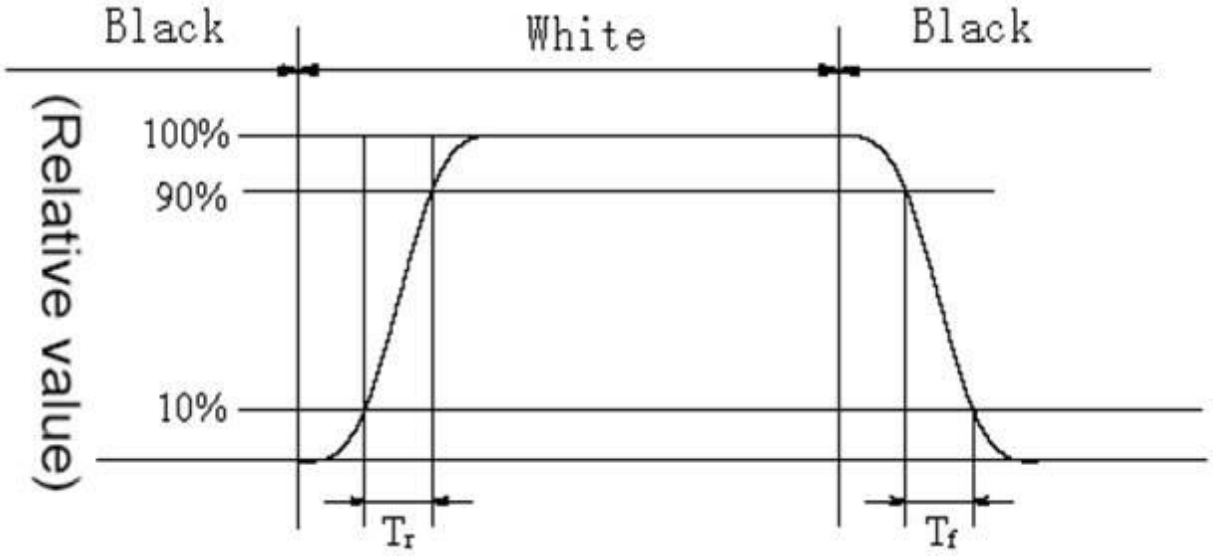

Note 7: Definition of Chromaticity:

The color coordinates (x_W,y_W),(x_R,y_R),(x_G,y_G),and (x_B,y_B) are obtained with all pixels in the viewing field at white, red, green, and blue states, respectively.

8. PIN ASSIGNMENT

Pin No.	Symbol	Function	Note
1	GND	Ground	Note2
2	IC	Internally connected & keep open	
3	IC	Internally connected & keep open	
4	IC	Internally connected & keep open	
5	IC	Internally connected & keep open	
6	IC	Internally connected & keep open	
7	GND	Ground	
8	IC	Internally connected & keep open	
9	NC	No contact	
10	NC	No contact	
11	GND	Ground	Note3
12	RO0N	ODD Pixel Data	Note3
13	RO0P	ODD Pixel Data	Note3
14	RO1N	ODD Pixel Data	Note3
15	RO1P	ODD Pixel Data	Note3
16	RO2N	ODD Pixel Data	Note3
17	RO2P	ODD Pixel Data	Note3
18	GND	Ground	Note2
19	ROCLKN	ODD Pixel Clock	Note3
20	ROCLKP	ODD Pixel Clock	Note3
21	GND	Ground	Note2
22	RO3N	ODD Pixel Data	Note3
23	RO3P	ODD Pixel Data	Note3
24	RO4N	ODD Pixel Data	Note3
25	RO4P	ODD Pixel Data	Note3
26	GND	Ground	Note2
27	GND	Ground	Note2
28	REON	Even Pixel Data	Note3
29	REOP	Even Pixel Data	Note3
30	RE1N	Even Pixel Data	Note3
31	RE1P	Even Pixel Data	Note3
32	RE2N	Even Pixel Data	Note3
33	RE2P	Even Pixel Data	Note3
34	GND	Ground	Note2
35	RECLKN	ODD Pixel Clock	Note3
36	RECLKP	ODD Pixel Clock	Note3
37	GND	Ground	Note2
38	RE3N	Even Pixel Data	Note3
39	RE3P	Even Pixel Data	Note3
40	RE4N	Even Pixel Data	Note3
41	RE4P	Even Pixel Data	Note3

42	GND	Ground	Note2
43	GND	Ground	Note2
44	GND	Ground	Note2
45	GND	Ground	Note2
46	GND	Ground	Note2
47	NC	No contact	
48	VDD	LCD Power Supply(typ+12.0V)	Note1
49	VDD	LCD Power Supply(typ+12.0V)	Note1
50	VDD	LCD Power Supply(typ+12.0V)	Note1
51	VDD	LCD Power Supply(typ+12.0V)	Note1

Note1: AII VDD LCD power pins shall be connected to +12.0V(typ.)
Note2: AII GND pins shall be grounded Metal bezel is internally connected to GND
Note3: Rx n+ and Rx n-(n=0,1,2,3,4) shall be wired by twist-pairs or side by side FPC patterns respectively

9. BLOCK DIAGRAM

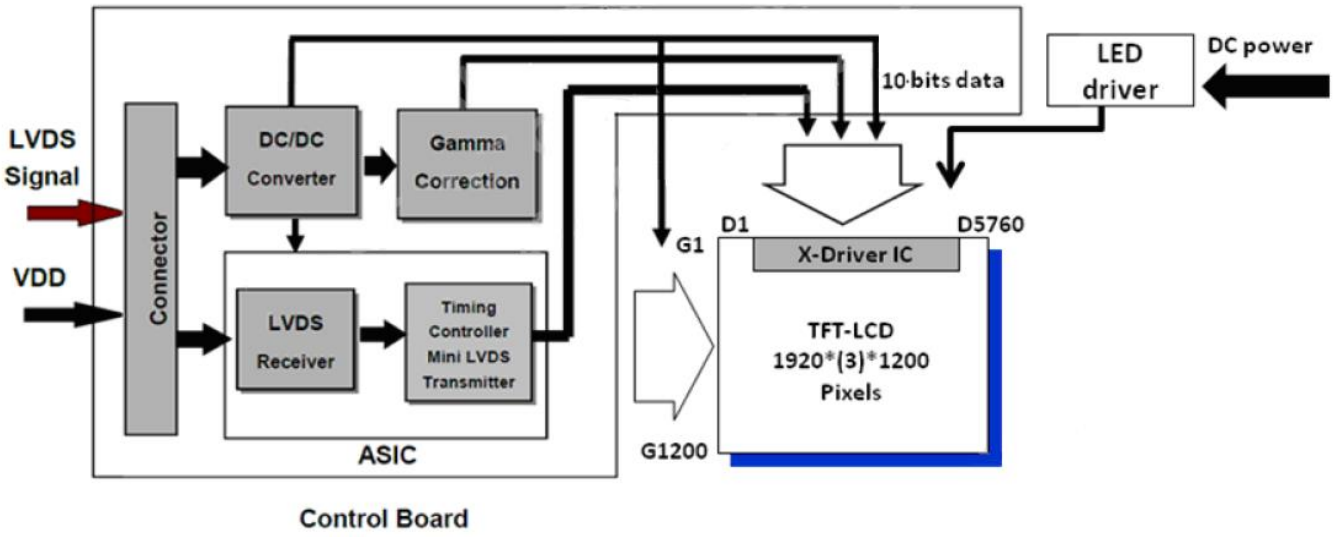

10. QUALITY ASSURANCE

10.1 Test Condition

10.1.1 Temperature and Humidity(Ambient Temperature)

Temperature : 25 ± 5°C
Humidity : 65 ± 5%

10.1.2 Operation

Unless specified otherwise, test will be conducted under function state.

10.1.3 Container

Unless specified otherwise, vibration test will be conducted to the product itself without putting it in a container.

10.1.4 Test Frequency

In case of related to deterioration such as shock test. It will be conducted only once.

10.1.5 Test Method

Reliability Test Item & Level			Remark
No.	Test Item	Test Level	
1	High Temperature Storage Test	Ta=60°C,240hrs	IEC60068-2-2
2	Low Temperature Storage Test	Ta=-20°C,240hrs	IEC60068-2-1
3	High Temperature Operation Test	Ta=50°C,240hrs	IEC60068-2-2
4	Low Temperature Operation Test	Ta=0°C,240hrs	IEC60068-2-1
5	High Temperature and High Humidity (No operation)	T=50°C,80%RH,240hrs	IEC60068-2-3
6	Thermal Cycling Test (No operation)	-20°C /30min, 60/ °C 30min, 100 cycles	IEC60068-2-14
7	Vibration test (Package)	Frequency:10~55HZ Amplitude:1.5mm Sweep time:11min Test period:6Cycles for each direction of X,Y,Z	IEC60068-2-6
8	Drop test (Package)	Height :60cm 1 conner,3edges,6surfaces	IEC60068-2-32
9	Electrostatic Discharge Test	State: operating Location: LCM/TP surface Condition:150pf 330Ω Contact +/- 8kV Air +/-15kV Criteria: Class B	IEC61000-4-2

10.2 Inspection condition

10.2.1 Inspection conditions

10.2.1.1 Inspection Distance : 35 cm

10.2.1.2 View Angle :

(1) Inspection under operating condition : 0°-30°

(2) Inspection under non-operating condition : 0°-30°

10.2.1.3 Appearance inspection time: ≦15 second

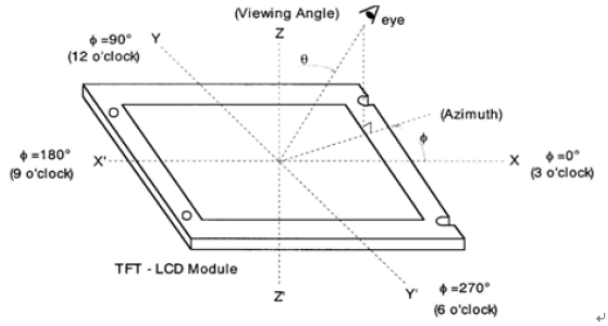

Figure 1: Viewing angle description

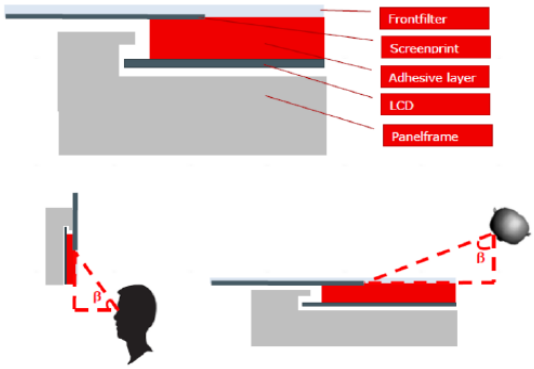

10.2.2 Environment conditions :

Ambient Temperature :		25±5℃
Ambient Humidity :		65±5%
Ambient Illumination	Cosmetic Inspection	820 ~ 1290lux
	Functional Inspection	300 ~ 500lux

10.2.3 Definition of applicable Zones

Area	Inspection Area
A	front of the screen
B	Edge, Screen Edge, Four sides and back side

10.2.4Inspection Parameters

Appearance and Functional Inspection Criteria (D: diameter, L: length; W: width, Z: height, T: glass thickness, n：number)

<table>
<tr><th>Inspection item</th><th>Inspection standard</th><th>Description</th></tr>
<tr><td>No image</td><td>Prohibited</td><td></td></tr>
<tr><td>Image abnormal</td><td>Prohibited</td><td></td></tr>
<tr><td>Line defect</td><td>Prohibited</td><td> 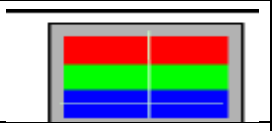 </td></tr>
<tr><td>Mura</td><td colspan="2">It is acceptable that the defect can not be seen with 2% ND filter.</td></tr>
<tr><td>Light leakage inspection</td><td colspan="2">It is required to be inspected in the dark room with dark pattern， edge brightness <0.8 Cd/m², other area brightness < 0.7 Cd/m²; display port signal is used for measurement.</td></tr>
<tr><td>Dot
(NOTE1)</td><td>
<table>
<tr><th rowspan="2">Item</th><th>Acceptable</th></tr>
<tr><th>Visible area</th></tr>
<tr><td>Bright dot</td><td>0</td></tr>
<tr><td>Small Bright dot（R/G/B）</td><td>14</td></tr>
<tr><td>Dark dot</td><td>4</td></tr>
<tr><td>Dark adjacent dots</td><td>2</td></tr>
</table>
</td><td> 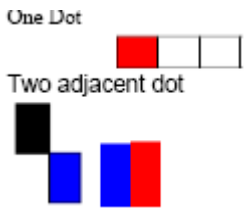
</td></tr>
<tr><td>Foreign material in dot shape
(NOTE5)</td><td>
<table>
<tr><th>Area</th><th>SPEC (unit: mm)</th><th>Acceptable</th></tr>
<tr><td rowspan="4">A/B</td><td>D≦0.2</td><td>Ignored</td></tr>
<tr><td>0.2<D≦0.4 distance >10cm</td><td>5</td></tr>
<tr><td>0.4<D≦0.6 distance >10cm</td><td>3</td></tr>
<tr><td>D＞0.6</td><td>0</td></tr>
</table>
</td><td> 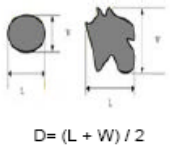
</td></tr>
<tr><td>Foreign material in line shape
(NOTE4)</td><td>
<table>
<tr><th>Area</th><th>SPEC(unit: mm)</th><th>Acceptable</th></tr>
<tr><td rowspan="3">A/B</td><td>W≤0.05， distance >10cm</td><td>3</td></tr>
<tr><td>0.05 < W≤0.1， L≤10 distance >10cm</td><td>2</td></tr>
<tr><td>W > 0.1， L > 10</td><td>0</td></tr>
</table>
</td><td> 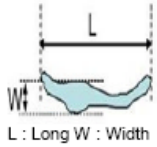
</td></tr>
<tr><td>Scratch
(NOTE4)</td><td>
<table>
<tr><th>Area</th><th>SPEC (unit: mm)</th><th>Acceptable</th></tr>
<tr><td rowspan="3">A/B</td><td>W≤0.05， distance >10cm</td><td>3</td></tr>
<tr><td>0.05 < W≤0.1， L≤10 distance >10cm</td><td>2</td></tr>
<tr><td>W > 0.1， L > 10</td><td>0</td></tr>
</table>
</td><td> 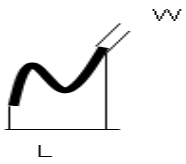
</td></tr>
</table>

<table>
<tr><td>Bubbles
(NOTE5)</td><td><table><tr><th>Area</th><th>SPEC (unit: mm)</th><th>Acceptable</th></tr><tr><td rowspan="3">A</td><td>D≦0.2</td><td>7</td></tr><tr><td>0.2＜D≦0.5</td><td>4</td></tr><tr><td>D＞0.5</td><td>0</td></tr></table></td><td> 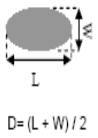
</td></tr>
<tr><td>Crack</td><td>Prohibited</td><td> 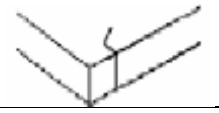 </td></tr>
<tr><td>Cover edge break/ angle missing</td><td>Prohibited</td><td> 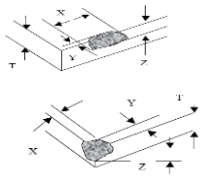 </td></tr>
<tr><td>Tape exposed</td><td><table><tr><th>Area</th><th>SPEC (unit: mm)</th><th>Acceptable</th></tr><tr><td>A</td><td>Prohibited</td><td>0</td></tr></table></td><td></td></tr>
<tr><td>Water marks</td><td><table><tr><th>Area</th><th>SPEC (unit: mm)</th><th>Acceptable</th></tr><tr><td>A</td><td>Prohibited</td><td>0</td></tr></table></td><td></td></tr>
<tr><td>Ink</td><td><table><tr><th>SPEC (unit: mm)</th><th>Acceptable</th></tr><tr><td>word unclear, inverted, mistake, break line</td><td>0</td></tr></table></td><td></td></tr>
<tr><td>Function</td><td>Prohibited</td><td></td></tr>
</table>

Note:1.(a)Bright Dark point defect is defined as point defect of R,G,B with area >1/2 dot respectively

(b) Incomplete Bright point: ＜1/2dot bright area is defined as incomplete bright point.

(c)Definition of distribution of point defect is as follows:

-minumum separation between dark point defects should be larger than 15mm..

Note:2 The external inspection should be conducted at the distance 35± 5cm between the eyes of inspctor and the panel .

Note:3 Luminance measurement for contrast ratio is at the distance 50± 5cm between the detective head and the panel with ambient illuminance less than 1 lux. Contrast ratio is obtained at optimum view angle.

Note:4 W-Width in mm , L-length of Max.(L1,L2) in mm.



Note:5 Spot Foreign Material (W≧L/4)

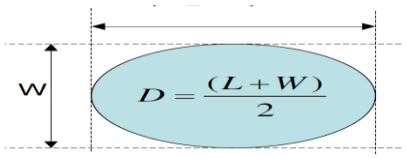

Note:6 The corlor that reflected on the surface should be according to sample

Note:7 The defect is not counted(means ignore) no matter the distance

Note:8 The ripple SPEC should be judged according to sample

Note:9 Foreign materail（dot scratch）judgement: it can be judged as OK if within the scope of dot shape.

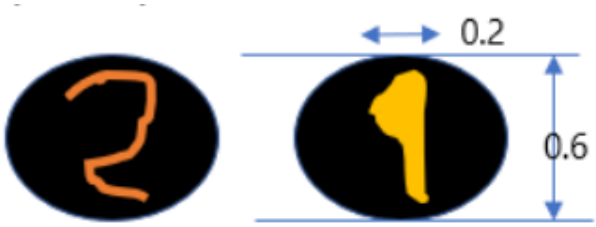

Note:10 There is an invisible disconnection in one line, or the disconnected line can be seen from another angle of refraction.

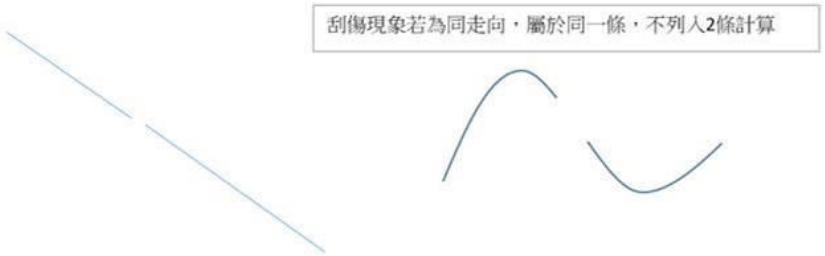

10.2.5 Sampling Condition

Unless otherwise agree in written, the sampling inspection shall be applied to the incoming inspection of customer.
Lot size: Quantity of shipment lot per model.
Sampling type: normal inspection, single sampling
Sampling table: MIL-STD-105E

Inspection level: Level II

	Definition	
Class of defects	AQL 0.65%	It is a defect that is likely to result in failure or to reduce materially the usability of the product for the intended function.
	AQL 1.5%	It is a defect that will not result in functioning problem with deviation classified.

11. LCM PRODUCT LABEL DEFINE

Product Label style:



Bar Code Define:

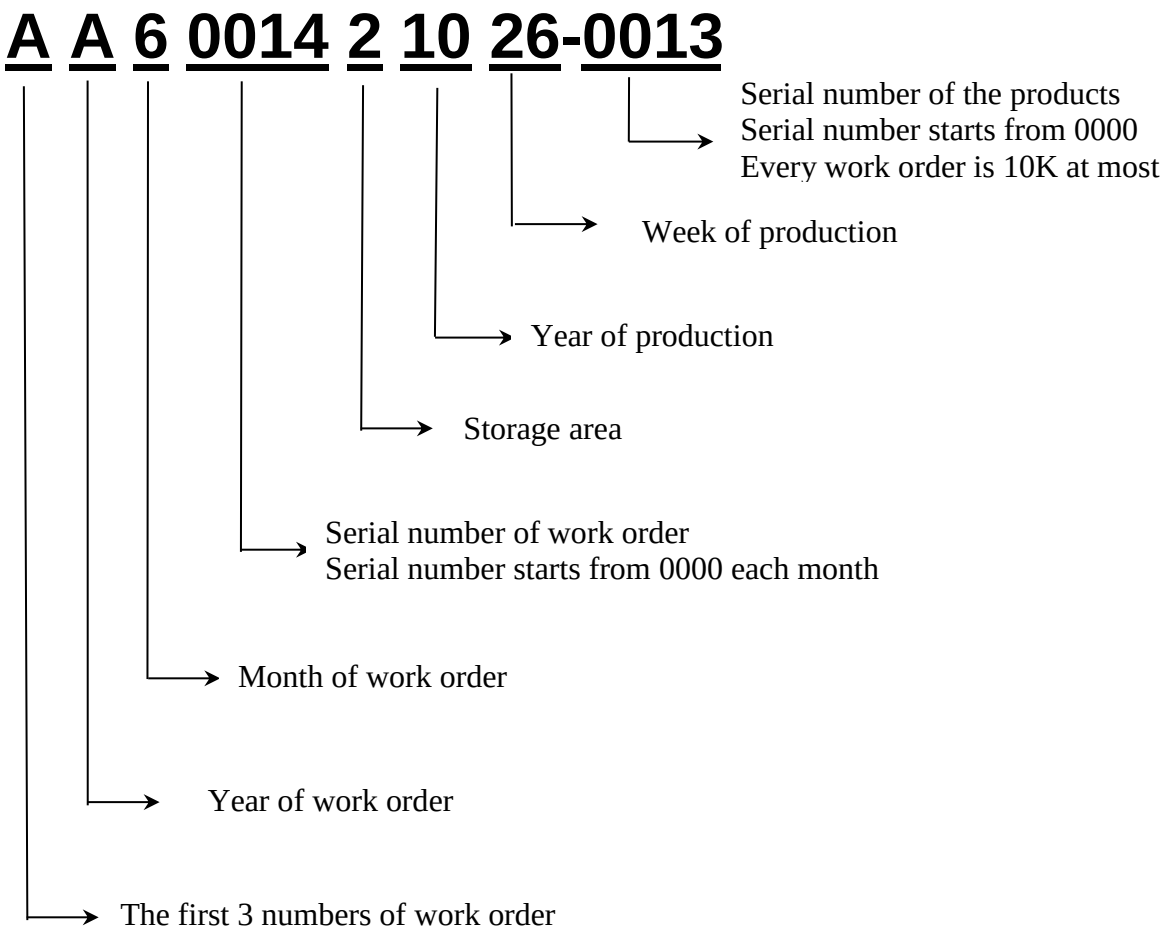

Product Name Define:

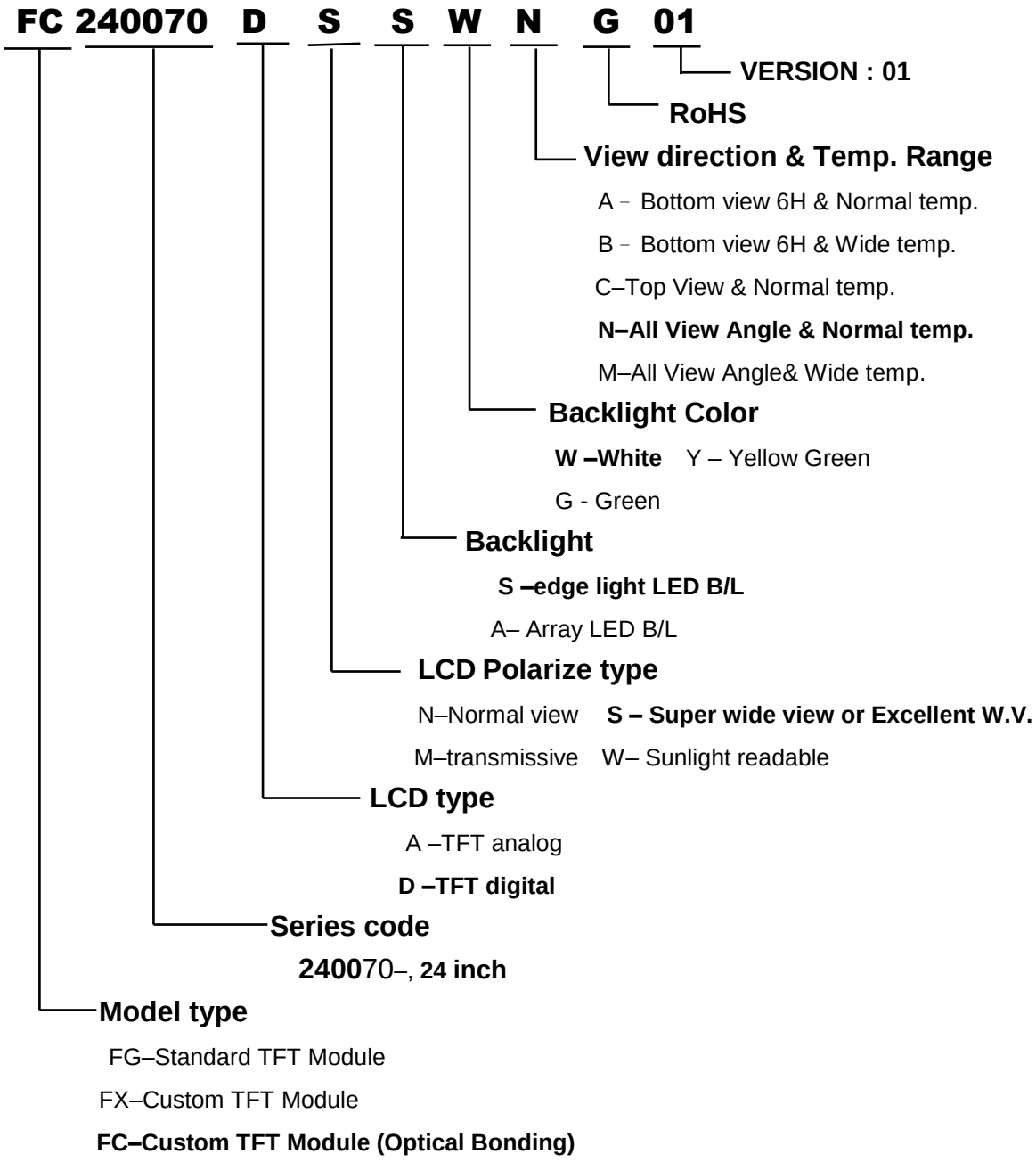

12. PRECAUTION FOR USING LCM

1. ASSEMBLY PRECAUTIONS
   (1) You must mount a module using holes arranged in four corners or four sides.
   (2) You should consider the mounting structure so that uneven force (ex. Twisted stress) is not applied to the module. And the case on which a module is mounted should have sufficient strength so that external force is not transmitted directly to the module.
   (3) Do not touch, push or rub the exposed polarizers with glass, tweezers or anything harder than HB pencil lead. And please do not rub with dust clothes with chemical treatment.
   (4) Wipe off saliva or water drops as soon as possible. Their long time contact with polarizer causes deformations and color fading.
   (5) Do not open the case because inside circuits do not have sufficient strength.
   (6) Please do not take a LCD module to pieces and reconstruct it. Resolving and reconstructing modules may cause them not to work well.
   (7) Please do not touch metal frames with bare hands and soiled gloves. A color change of the metal frames can happen during a long preservation of soiled LCD modules.
   (8) Please pay attention to handling lead wire of backlight so that it is not tugged in connecting with inverter.
2. OPERATING PRECAUTIONS
   (1) Please be sure to turn off the power supply before connecting and disconnecting signal input cable.
   (2) Please do not change variable resistance settings in LCD module. They are adjusted to the most suitable value. If they are changed, it might happen LCD does not satisfy the characteristics specification
   (3) Be careful for condensation at sudden temperature change. Condensation makes damage to polarizer or electrical contacted parts. And after fading condensation, smear or spot will occur.
   (4) When fixed patterns are displayed for a long time, remnant image is likely to occur.
   (5) Module has high frequency circuits. Sufficient suppression to the electromagnetic interference shall be done by system manufacturers. Grounding and shielding methods may be important to minimize the interference.
   (6) Please consider that LCD backlight takes longer time to become stable of radiation characteristics in low temperature than in room temperature.
3. ELECTROSTATIC DISCHARGE CONTROL
   (1) The operator should be grounded whenever he/she comes into contact with the module. Never touch any of the conductive parts such the copper leads on the PCB and the interface terminals with any parts of the human body.
   (2) The modules should be kept in antistatic bags or other containers resistant to static for storage.
   (3) Only properly grounded soldering irons should be used.
   (4) If an electric screwdriver is used, it should be well grounded and shielded from commutator sparks.
   (5) The normal static prevention measures should be observed for work clothes and working benches; for the latter conductive (rubber) mat is recommended
   (6) Since dry air is inductive to statics, a relative humidity of 50-60% is recommended.
4. STORAGE PRECAUTIONS
   (1) When you store LCDs for a long time, it is recommended to keep the temperature between 0°C-40°C without the exposure of sunlight and to keep the humidity less than 90%RH.
   (2) Please do not leave the LCDs in the environment of high humidity and high temperature such as 60°C 90%RH
   (3) Please do not leave the LCDs in the environment of low temperature; below -20°C.
5. OTHERS
   (1) A strong incident light into LCD panel might cause display characteristics' changing inferior because of polarizer film, color filter, and other materials becoming inferior. Please do not expose LCD module direct sunlight Land strong UV rays
   (2) Please pay attention to a panel side of LCD module not to contact with other materials in preserving it alone.
   (3) For the packaging box, please pay attention to the followings:
      a. Please do not pile them up more than 5 boxes. (They are not designed so.) And please do not turn over.
      b. Please handle packaging box with care not to give them sudden shock and vibrations. And also please do not throw them up.
      c. Packing box and inner case for LCDs are made of cardboard. So please pay attention not to get them wet. (Such like keeping them in high humidity or wet place can occur getting them wet.)
   (4) Waste
      Liquid crystal module products shall not be arbitrarily discarded, the water and soil have a negative impact on the environment, the need to be handled by a qualified unit.
6. LIMITED WARRANTY
   Unless otherwise agreed between DATA IMAGE and customer, DATA IMAGE will replace or repair any of its LCD and LCM which is found to be defective electrically and visually when inspected in accordance with DATA IMAGE acceptance standards, for a period on one year from date of shipment. Confirmation of such date shall be based on freight documents. The warranty liability of DATA IMAGE is limited to repair and/or replacement on the terms set forth above. DATA IMAGE will not responsible for any subsequent or consequential events.

13. OUTLINE DRAWING

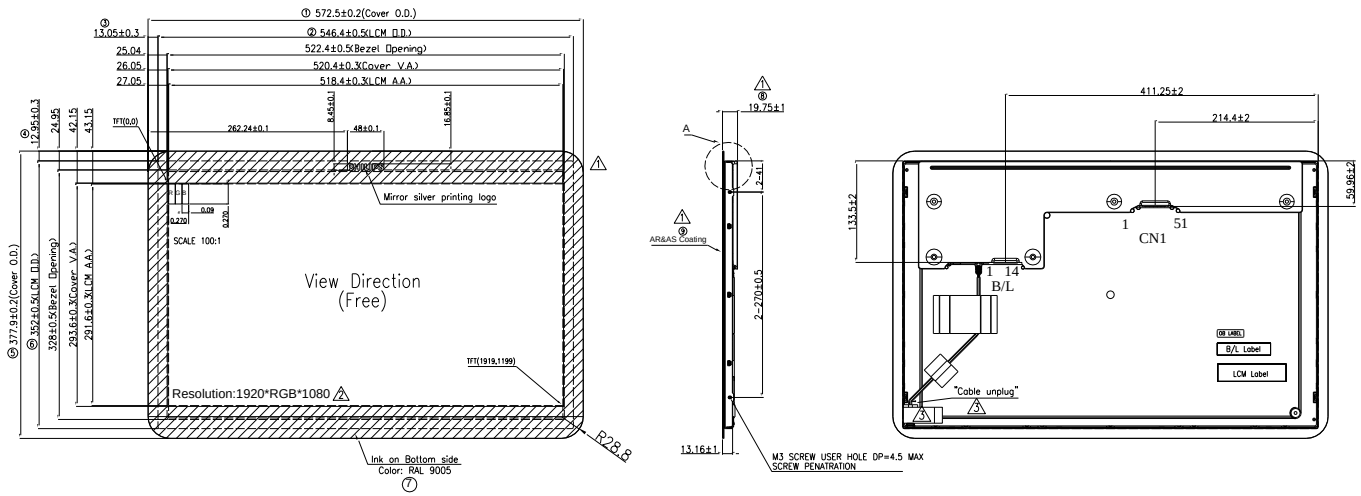

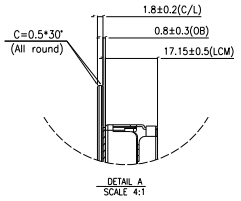

BL PIN Definition	
1	VDD
2	VDD
3	VDD
4	VDD
5	VDD
6	GND
7	GND
8	GND
9	GND
10	GND
11	NC
12	On/Off
13	IC
14	PWM

Note:
1. Tolerance is ±0.5 unless otherwise noted.
2. Important dimension. ① ~ ⑨⚠
3. Center brightness(LCM only): 400 cd/m² (Typ.),320 cd/m² (Min.)
4. CN1 : The Interface connector is JAE FI-RE51S-HF-R1500
   Matching connector is JAE FE-RE51HL , FI-R51HL or equivalent.
5. ⚠ B/L: The Interface connector is JST S14B-PH-SM6-K-TB(HF)
   Matching connector is JST PHR-14 or equivalent.
6. Torque of M3 user hole should be within 4 kgf-cm&re-screw 10 times.
7. For RoHS & REACH & Halogen Free.
8. Uniformity : 75%(min.).

CN1 PIN Definition									
								41	RE4P
1	GND	11	GND	21	GND	31	RE1P	42	GND
2	IC	12	RO0N	22	RO3N	32	RE2N	43	GND
3	IC	13	RO0P	23	RO3P	33	RE2P	44	GND
4	IC	14	RO1N	24	RO4N	34	GND	45	GND
5	IC	15	RO1P	25	RO4P	35	RECLKN	46	GND
6	IC	16	RO2N	26	GND	36	RECLKP	47	NC
7	GND	17	RO2P	27	GND	37	GND	48	VDD
8	IC	18	GND	28	RE0N	38	RE3N	49	VDD
9	NC	19	ROCLKN	29	RE0P	39	RE3P	50	VDD
10	NC	20	ROCLKP	30	RE1N	40	RE4N	51	VDD

AUTH	DESCRIPTION		DATE	APPROVED
⚠3	Add tape & unplug the cable	ECR110-N50013	2023/05/09	
⚠2	Modify Resolution:1920*RGB*1200 to Resolution:1920*RGB*1080	ECR110-M40001	2022/08/16	
⚠1	Remove peeling tape & Important dimension from circle 10 to 9. & Add note5	ECR110-M40001	2022/04/06	
	Change the drawing from Rev.2 to Rev.A	NPPR-1389	2021/12/16	

REVISIONS

DATE:	2020/07/10
DRAWN:	WenChun
CHECK:	Roger.Owen
APPROVE:	Clement. Jack

TITLE:
24" LCM outline dimension.

DWG. NO.	FC240070SG01		
UNITS	M M	REV.	D
SCALE	1 / 1	SHEET 1 OF 1	

DATA IMAGE

設計驗證
工程課
2023.08.28
發行
鈺緯科技開發股份有限公司

2AAD539023T(T0194)

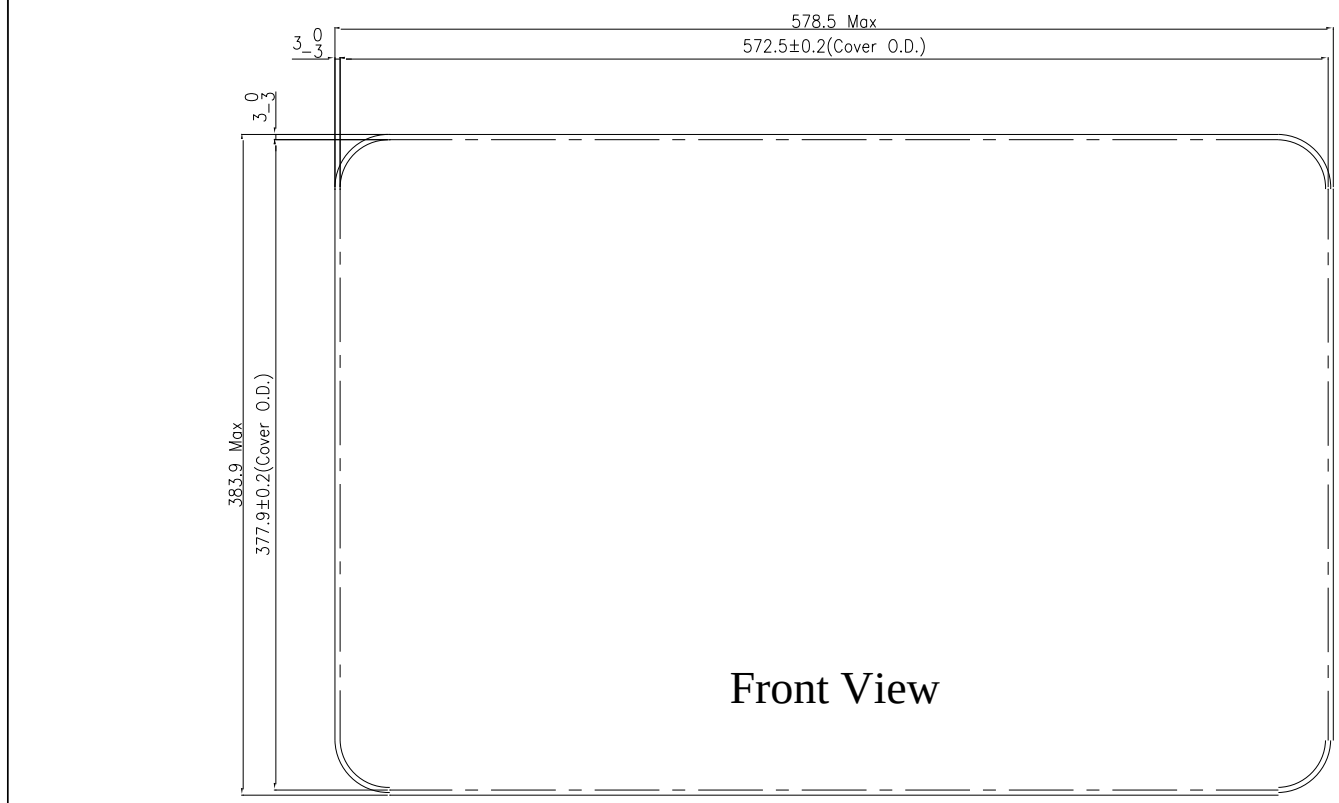

Front View

設計驗證
工程課
2023.08.28
發行
[illegible]科技開發股份有限公司

AUTH	DESCRIPTION	DATE	APPROVED
REVISIONS			

DATE:	2022/06/30
DRAWN:	Bill
CHECK:	Roger
APPROVE:	Nomo

TITLE: Protection film outline dimension

DWG. NO.	GF240060-1		
UNITS M M		REV.	A
SCALE 1 / 1	SHEET 1 OF 1		

DATA IMAGE

2AAD539023T(T0194)

14. PACKAGE INFORMATION

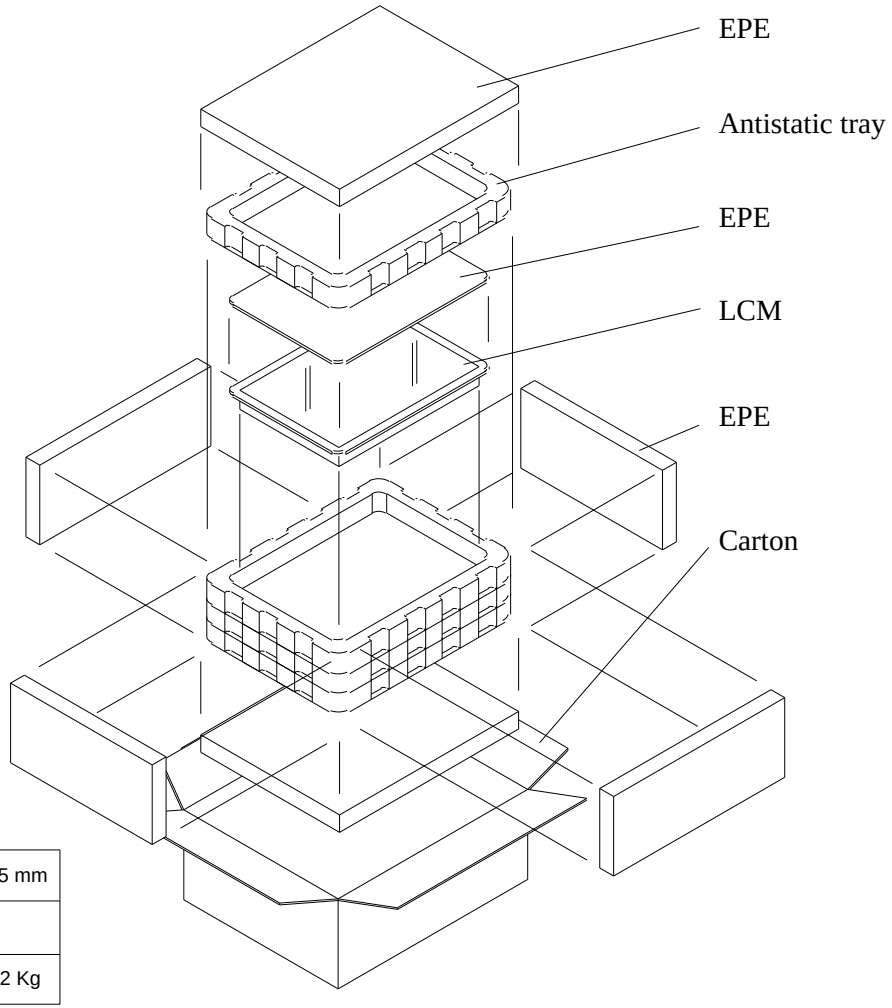

CARTON SIZE		805*548*215 mm	
QUANTITY PER CARTON		3 pcs	
N.W.	11.6 Kg	G.W.	16.2 Kg