Doc. Number :

☐ Tentative Specification
☐ Preliminary Specification
■ Approval Specification

MODEL NO.: R213UCE
SUFFIX: L01

Customer:

APPROVED BY **SIGNATURE**

Name / Title
Note

Please return 1 copy for your confirmation with your signature and comments.

Approved By	Checked By	Prepared By
陳立錚	張喻翔	葉財源

The copyright belongs to InnoLux. Any unauthorized use is prohibited.

CONTENTS

1. GENERAL DESCRIPTION 5
1.1 OVERVIEW 5
1.2 FEATURES 5
1.3 GENERAL SPECIFICATIONS 5
2. MECHANICAL SPECIFICATIONS 5
3. ABSOLUTE MAXIMUM RATINGS 6
3.1 ABSOLUTE RATINGS OF ENVIRONMENT 6
3.2 ELECTRICAL ABSOLUTE RATINGS 6
3.2.1 TFT LCD MODULE 6
3.2.2 BACKLIGHT UNIT 7
4. ELECTRICAL SPECIFICATIONS 7
4.1 FUNCTION BLOCK DIAGRAM 7
4.2. INPUT INTERFACE CONNECTIONS(CN1) 7
4.3 ELECTRICAL CHARACTERISTICS 10
4.3.1 LCD ELETRONICS SPECIFICATION 10
4.3.2 Vcc Power Dip Condition 12
4.3.3 CONVERTER ELECTRICAL CHARATERISTICS 12
4.3.4 CONVERTER INPUT CONNECTOR PIN ASSIGNMENT(CN2) 14
4.4 LVDS INPUT SIGNAL SPECIFICATIONS 15
4.4.1 LVDS DATA INPUT DATA ORDER (VESA Mode) 15
4.4.2 LVDS DATA INPUT DAT ORDER (JEIDA Mode) 15
4.4.3 COLOR DATA INPUT ASSIGNMENT 16
4.5 DISPLAY TIMING SPECIFICATIONS 17
4.6 POWER ON/OFF SEQUENCE 19
5. OPTICAL CHARACTERISTICS 20
5.1 TEST CONDITIONS 20
5.2 OPTICAL SPECIFICATIONS 20
6. RELIABILITY TEST ITEM 24
7. PACKING 25
7.1 PACKING SPECIFICATIONS 25
7.2 PACKING METHOD 25
7.3 PALLET 26
7.4 UNPACKING METHOD 27
8. INX MODULE LABEL 27
9. PRECAUTIONS 28

The copyright belongs to InnoLux. Any unauthorized use is prohibited.

9.1 ASSEMBLY AND HANDLING PRECAUTIONS 28
9.2 STORAGE PRECAUTIONS 28
9.3 OPERATION PRECAUTIONS 28
9.4 SAFETY PRECAUTIONS 29
9.5 SAFETY STANDARDS 29
9.6 OTHER 29
Appendix. OUTLINE DRAWING 30

The copyright belongs to InnoLux. Any unauthorized use is prohibited.

REVISION HISTORY

Version	Date	Page	Description
0.0	2014/6/24	All	Spec Ver.0.0 was first issued.
1.0	2014/10/24	All	Spec Ver.1.0 was first issued.
		5	Section 1.3 update power consumption value
		7	Section 3.2.2 update backlight electrical information
		9	Section 4.3.1 update
		12	Section 4.3.3 note drawing update
		20	Section 5.2 update By vlaue
		24	Section 6 update Vibration Test condition Sine Wave
2.0	2016/03/14	All	Spec Ver.2.0 was first issued.
		19	Section 4.6 POWER ON/OFF SEQUENCE T6(min) change to 5ms
		20	Section 5.2 OPTICAL SPECIFICATIONS Wx change to 0.308, By change to 0.047
		20	Section 5.2 OPTICAL SPECIFICATIONS Modify response time Tr/Tf to 8ms/8ms (typ) & 15ms/15ms(max)
2.1	2016/6/24	30	Refer EC No. CPI-EC160097, revised relative mechanical 2D drawing.
2.2	2016/11/4	5	Section 1.3 Surface Treatment add hardness spec.
2.3	2017/06/17	5	Section 1.1 & 1.3 display color amount change to 16.8Mega.
3.0	2017/9/21	All	Approval Spec Ver.3.0 was first issued.
3.1	2019/5/20	30	Updated OUTLINE DRAWING drawing file for LGP Fixed
3.2	2021/01/20	27	INX MODULE LABEL format was modified..
3.2	2021/01/20	29	Change safety standards to UL/IEC 62368-1.
3.3	2023/3/10	12	4.3.3 CONVERTER ELECTRICAL CHARATERISTICS ,backlight off of BL control level and PWM low level of PWM control level (Max value) was modified.
3.3	2023/3/10	24	6. RELIABILITY TEST ITEM, required condition of vibration test was modified (Acceleration: 1.5 Grms to 1.5G).

The copyright belongs to InnoLux. Any unauthorized use is prohibited.

1. GENERAL DESCRIPTION

1.1 OVERVIEW

R213UCE-L01 is a 21.3" TFT Liquid Crystal Display module with LED Backlight unit and one 30-pin 2ch-LVDS interface. This module supports 1600 x 1200 UXGA screen and can display up to 16.8M colors. The module includes build-in converter for Backlight.

1.2 FEATURES

This specification applies to the Type 21.3" Color TFT LCD Module, Model R213UCE-L01. This module includes a converter board for the LED backlight unit.

- The screen format is intended to support UXGA 1600(H) x 1200(V) resolution.
- All input signals are LVDS (Low Voltage Differential Signaling) interface.
- This module is UL approved and Rohs compliant

1.3 GENERAL SPECIFICATIONS

Item	Specification	Unit	Note
Screen Size	21.3" real diagonal		
Driver Element	a-si TFT active matrix	-	-
Pixel Number	1600 x R.G.B. x 1200	Pixel	-
Pixel Pitch	0.27 (H) x 0.27 (V)	mm	-
Pixel Arrangement	RGB Vertical stripe	-	-
Display Colors	16.8M	-	-
Transmissive Mode	Normally Black	-	-
Surface Treatment	Anti-glare , hardness_3H	-	-
Luminance, White	500	cd/m2	-
Power Consumption	Total 27.4W (typ.), Total 29.7W(Max)		(1)(2)

Note (1) The specified power consumption : Total= cell (reference 4.3.1)+Converter (reference 4.3.4)

Note (2) Power Consumption(Max) : Cell 5.0W,Converter 24.7W.

2. MECHANICAL SPECIFICATIONS

Item		Min.	Typ.	Max.	Unit	Note
Module Size	Horizontal (H)	456.5	457	457.5	mm	(1)
	Vertical (V)	349.5	350	350.5	mm	
	Thickness (T)	18.79	19.29	19.79	mm	
Bezel Area	Horizontal	437.7	438.2	438.7	mm	
	Vertical	329.5	330	330.5	mm	
Active Area	Horizontal	-	432	-	mm	
	Vertical	-	324	-	mm	
Weight		2070	2170	2270	g	

Note (1) Please refer to the attached drawings for more information of front and back outline dimensions.

The copyright belongs to InnoLux. Any unauthorized use is prohibited.

3. ABSOLUTE MAXIMUM RATINGS

3.1 ABSOLUTE RATINGS OF ENVIRONMENT

Item	Symbol	Value		Unit	Note
		Min.	Max.		
Storage Temperature	TST	-20	60	ºC	(1)
Operating Ambient Temperature	TOP	0	50	ºC	(1), (2)

Note (1)

(a) 90 %RH Max. (Ta < 40 ºC).

(b) Wet-bulb temperature should be 39 ºC Max.

(c) No condensation.

Note (2) The temperature of panel surface should be 0 ºC min. and 65 ºC max.

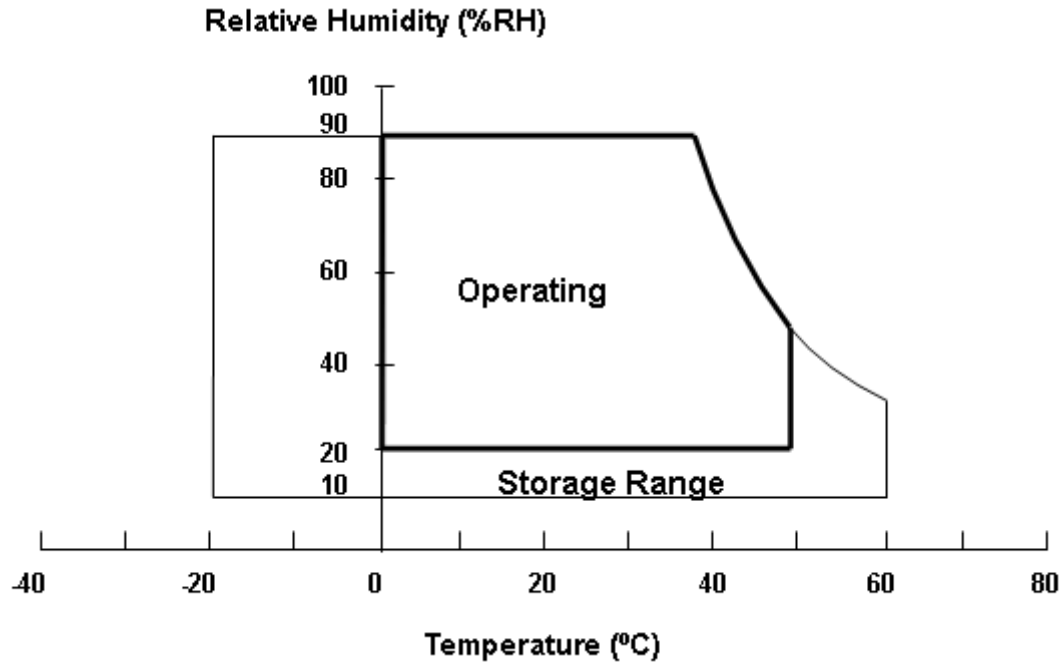

3.2 ELECTRICAL ABSOLUTE RATINGS

3.2.1 TFT LCD MODULE

Item	Symbol	Value		Unit	Note
		Min.	Max.		
Power Supply Voltage	VCCS	-0.3	13.2	V	(1)
Logic Input Voltage	V_{IN}	-0.3	3.6	V	

The copyright belongs to InnoLux. Any unauthorized use is prohibited.

3.2.2 BACKLIGHT UNIT

Item	Symbol	Value		Unit	Note
		Min.	Max.		
Light Bar Voltage	V_W	-	39.6	V	
Converter Input Voltage	V_{BL}	10.8	13.2	V	
Control Signal Level	-	0	5	V	(2)

Note (1) Permanent damage to the device may occur if maximum values are exceeded. Function operation should be restricted to the conditions described under Normal Operating Conditions.

Note (2) The control signals include On/Off Control and External PWM Control.

4. ELECTRICAL SPECIFICATIONS

4.1 FUNCTION BLOCK DIAGRAM

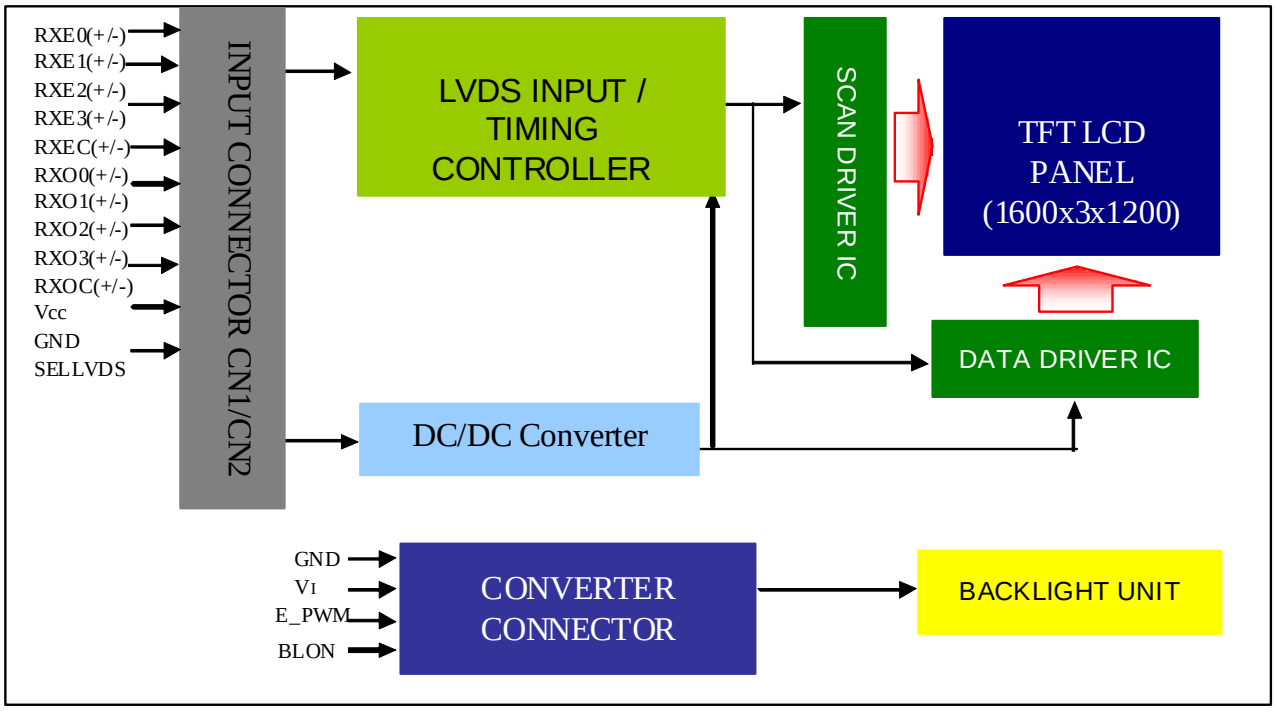

4.2. INPUT INTERFACE CONNECTIONS(CN1)

Pin	Name	Description
1	RXO0-	Negative LVDS differential data input. Channel O0 (odd)
2	RXO0+	Positive LVDS differential data input. Channel O0 (odd)
3	RXO1-	Negative LVDS differential data input. Channel O1 (odd)
4	RXO1+	Positive LVDS differential data input. Channel O1 (odd)
5	RXO2-	Negative LVDS differential data input. Channel O2 (odd)
6	RXO2+	Positive LVDS differential data input. Channel O2 (odd)
7	GND	Ground
8	RXOC-	Negative LVDS differential clock input. (odd)

The copyright belongs to InnoLux. Any unauthorized use is prohibited.

9	RXOC+	Positive LVDS differential clock input. (odd)
10	RXO3-	Negative LVDS differential data input. Channel O3(odd)
11	RXO3+	Positive LVDS differential data input. Channel O3 (odd)
12	RXE0-	Negative LVDS differential data input. Channel E0 (even)
13	RXE0+	Positive LVDS differential data input. Channel E0 (even)
14	GND	Ground
15	RXE1-	Negative LVDS differential data input. Channel E1 (even)
16	RXE1+	Positive LVDS differential data input. Channel E1 (even)
17	GND	Ground
18	RXE2-	Negative LVDS differential data input. Channel E2 (even)
19	RXE2+	Positive LVDS differential data input. Channel E2 (even)
20	RXEC-	Negative LVDS differential clock input. (even)
21	RXEC+	Positive LVDS differential clock input. (even)
22	RXE3-	Negative LVDS differential data input. Channel E3 (even)
23	RXE3+	Positive LVDS differential data input. Channel E3 (even)
24	NC	For LCD internal use only, Do not connect
25	SELLVDS	Low (0V) : VESA Mode (Default), High(3.3V) : JEIDA Mode Note(4)
26	NC	For LCD internal use only, Do not connect
27	NC	For LCD internal use only, Do not connect
28	Vcc	+12.0V power supply
29	Vcc	+12.0V power supply
30	Vcc	+12.0V power supply

Note (1) Connector Part No.: P-TWO 187114-30091

Note (2) The first pixel is odd.

Note (3) Input signal of even and odd clock should be the same timing.

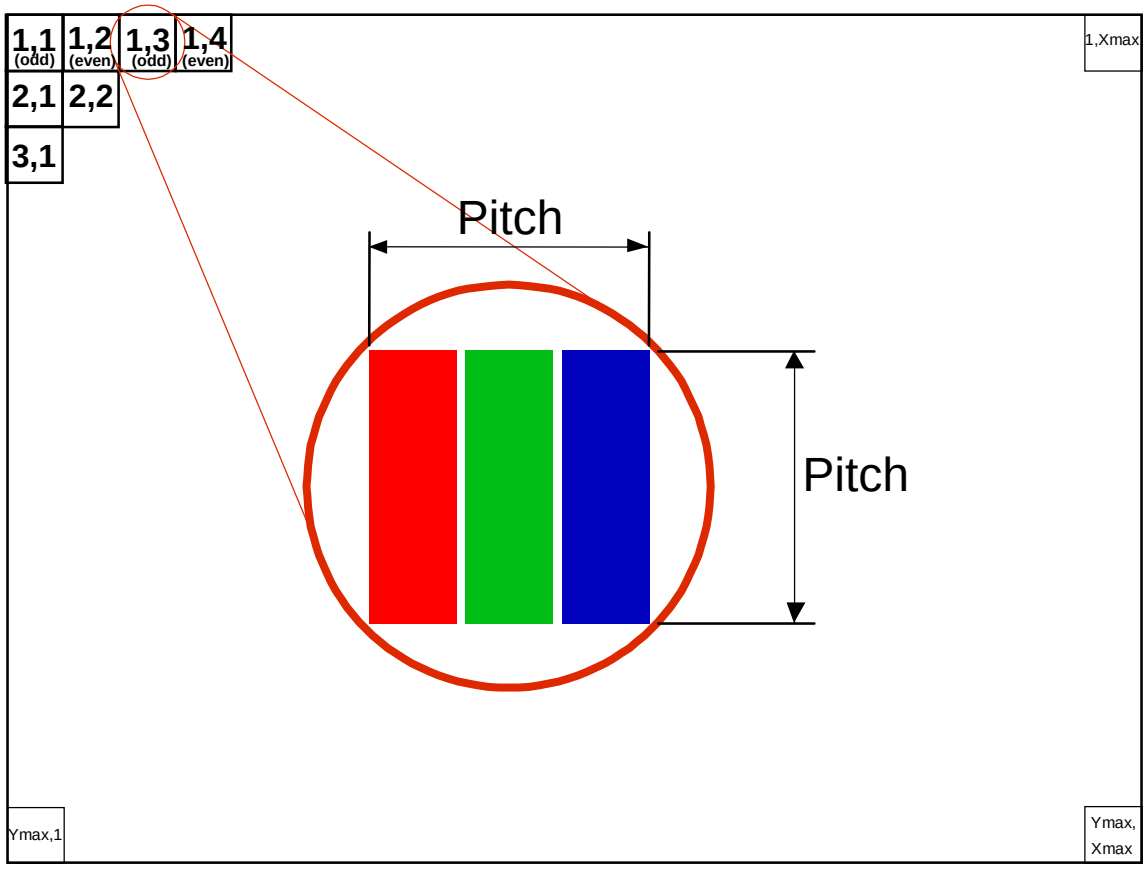

The copyright belongs to InnoLux. Any unauthorized use is prohibited.

Note (4) SELLVDS

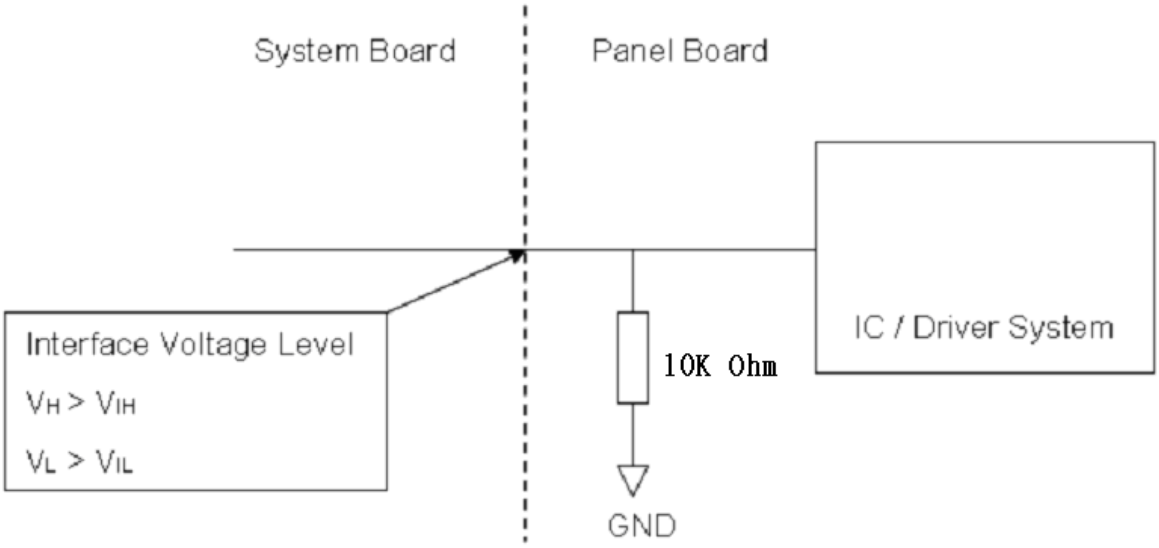

Note (5) Interface connector PIN1 position (PCBA board front view)

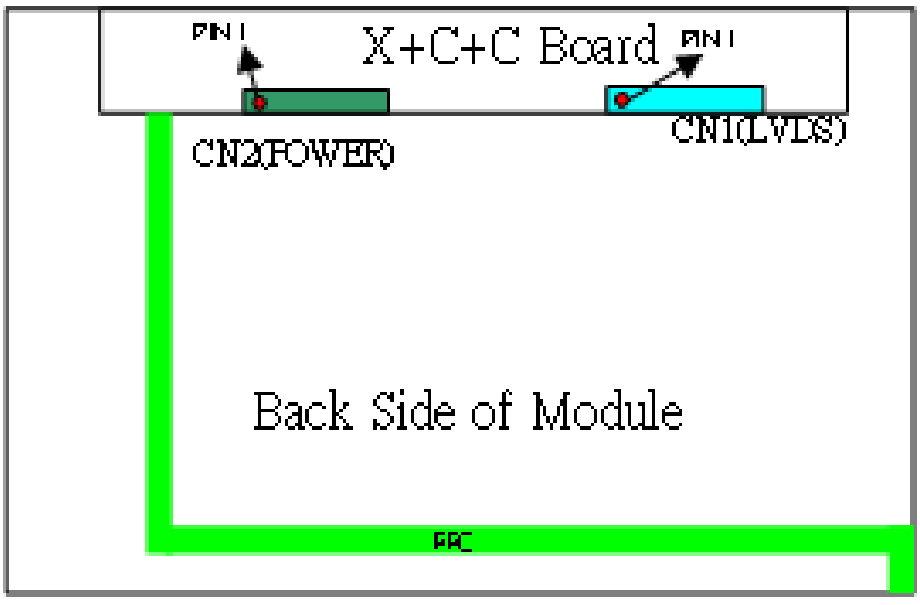

The copyright belongs to InnoLux. Any unauthorized use is prohibited.

4.3 ELECTRICAL CHARACTERISTICS

4.3.1 LCD ELETRONICS SPECIFICATION

Parameter		Symbol	Value			Unit	Note
			Min.	Typ.	Max.		
Power Supply Voltage		Vcc	10.8	12.0	13.2	V	-
Ripple Voltage		V_{RP}	-	-	300	mV	-
Rush Current		I_{RUSH}	-	-	2.5	A	(2)
Power Supply Current	White	-	-	0.35	0.42	A	(3)a
	Black	-	-	0.26	0.32	A	(3)b
	Vertical Stripe	-	-	0.34	0.41	A	(3)c
Power Consumption		PLCD	-	4.2	5.04	Watt	(4)
LVDS differential input voltage		Vid	100	-	600	mV	(5)
LVDS common input voltage		VIC	1.0	1.2	1.4	V	-

Note (1) The ambient temperature is Ta = 25 ± 2 ºC.

Note (2) Measurement Conditions:

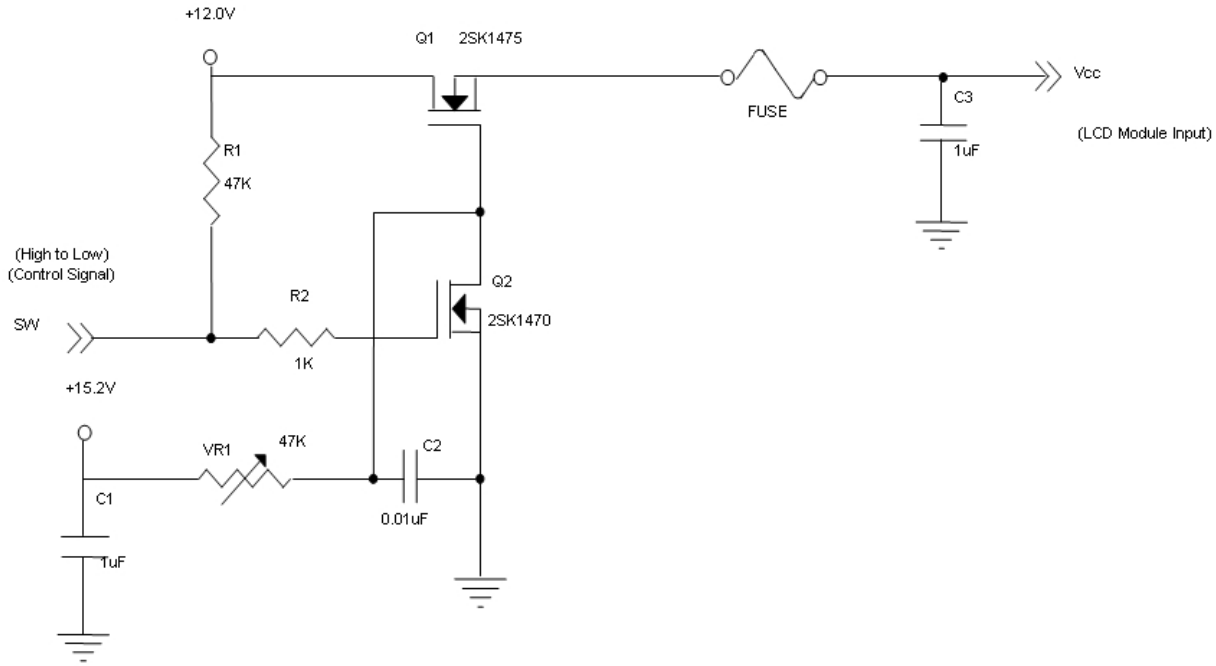

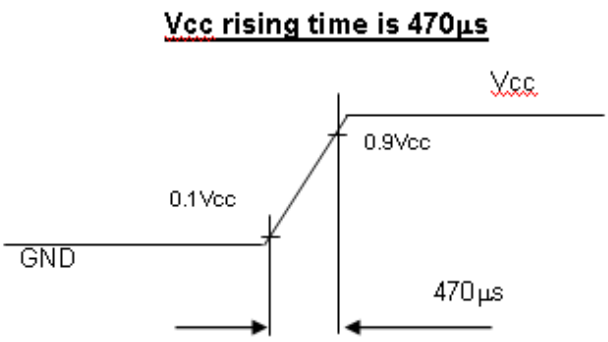

The copyright belongs to InnoLux. Any unauthorized use is prohibited.

Note (3) The specified max power supply current is under the conditions at Vcc = 12.0 V, Ta = 25 ± 2 ºC, Fr = 60Hz, whereas a power dissipation check pattern below is displayed.

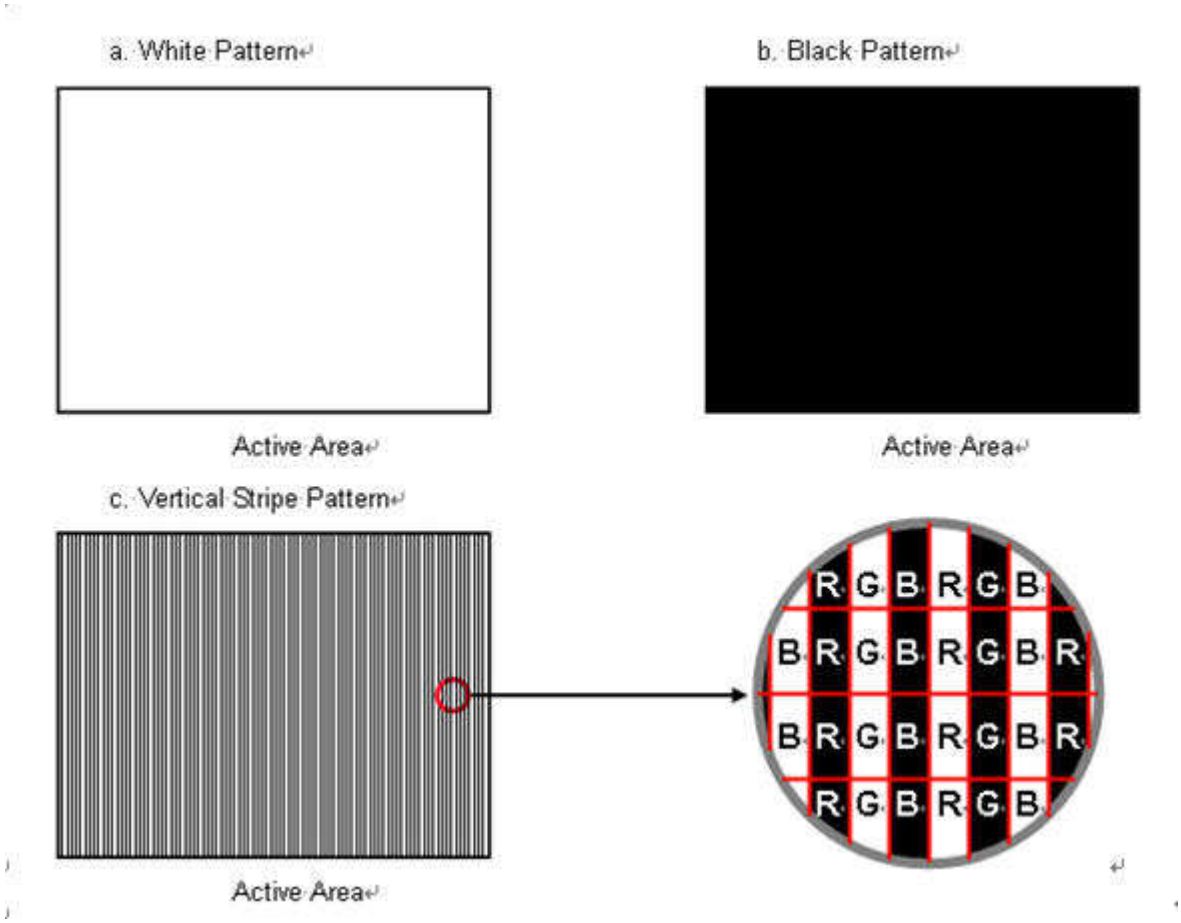

Note (4) The power consumption is specified at the pattern with the maximum current.

Note (5) Vid waveform condition

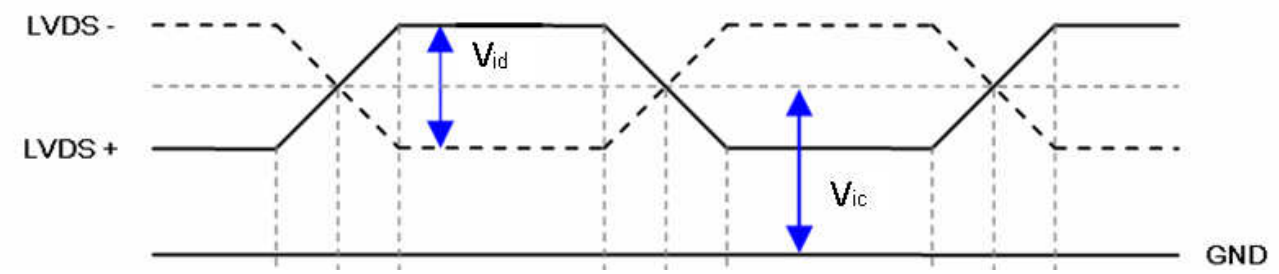

The copyright belongs to InnoLux. Any unauthorized use is prohibited.

4.3.2 Vcc Power Dip Condition

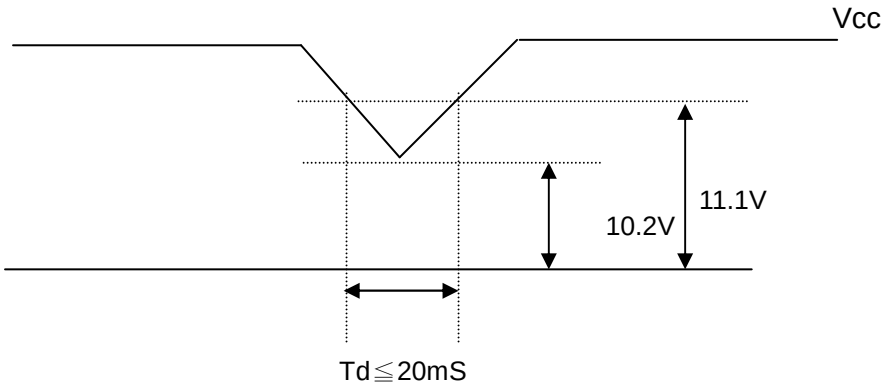

4.3.3 CONVERTER ELECTRICAL CHARATERISTICS

Ta = 25 ± 2 ºC

Parameter		Symbol	Value			Unit	Note
			Min.	Typ.	Max.		
Converter Power Supply Voltage		V_i	10.8	12.0	13.2	V	(Duty 100%)
Converter Power Supply Current		I_i	---	1.93	2.06	A	@ Vi = 12V (Duty 100%)
Input Power Consumption		P_i	---	23.2	24.7	W	@ Vi = 12V (Duty 100%)
BL Control Level	Backlight on	BLON	2	3.3	5.0	V	
	Backlight off		0	0	0.3	V	
PWM Control Level	PWM High Level	E_PWM	2	3.3	5.0	V	Positive Dimming
	PWM Low Level		0	0	0.3	V	
PWM Control Duty Ratio			1		100	%	
PWM Control Frequency		f_{PWM}	100	200	1K	Hz	
LED Life Time		LLED	50,000			Hrs	(1)

Note (1) The lifetime of LED is estimated data and defined as the time when LED packages continue to operate under the conditions at Ta = 25 ±2 ℃ until the brightness becomes ≦ 50% of its original value.

The copyright belongs to InnoLux. Any unauthorized use is prohibited.

Power sequence and control signal timing are shown in the following figure

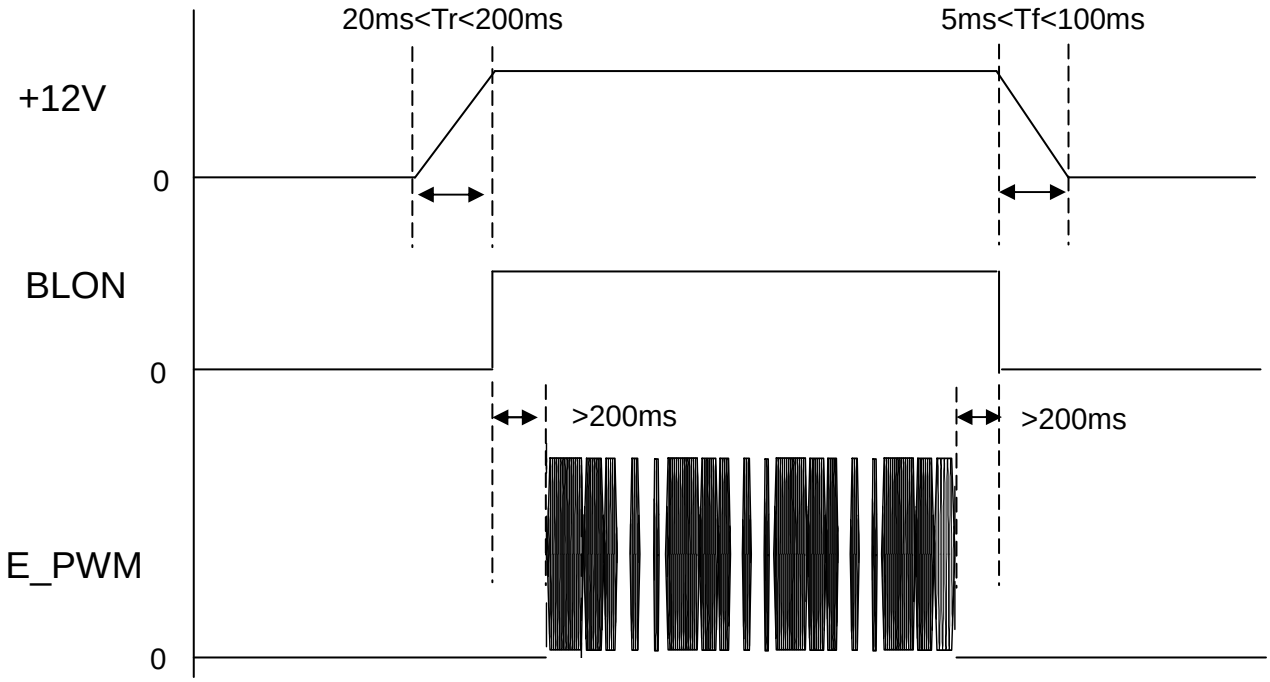

Note： While system is turned ON or OFF, the power sequences must follow as below descriptions

Turn ON sequence: V_I(+12V) → BLON → E_PWM signal

Turn OFF sequence: E_PWM signal → BLON →V_I(+12V)

The copyright belongs to InnoLux. Any unauthorized use is prohibited.

4.3.4 CONVERTER INPUT CONNECTOR PIN ASSIGNMENT(CN2)

Pin	Symbol	Remark
1	VI	+12 V
2		
3		
4		
5		
6	GND	GND
7		
8		
9		
10		
11	NC	No Connection
12	BLON	BL ON/OFF (ON:3.3V, OFF:0V)
13	NC	No Connection
14	E_PWM	External PWM Control for Positive (Hi Level: TBD V, Low Level: TBD V)

Connector Part No.: FCN JH2-D4-143N or CviLux CI0114M1HRO-LA-NH or equivalent

BLON Pin

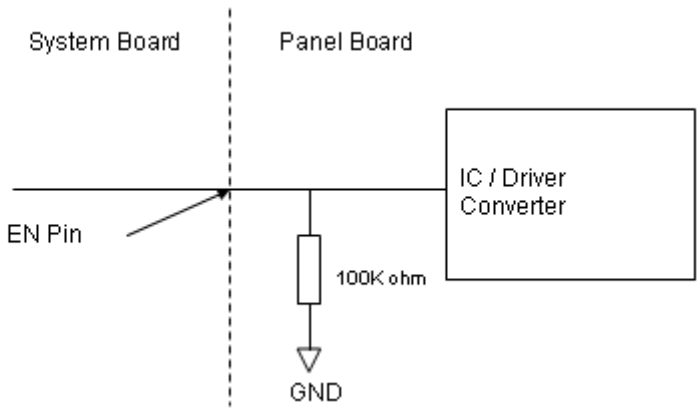

The copyright belongs to InnoLux. Any unauthorized use is prohibited.

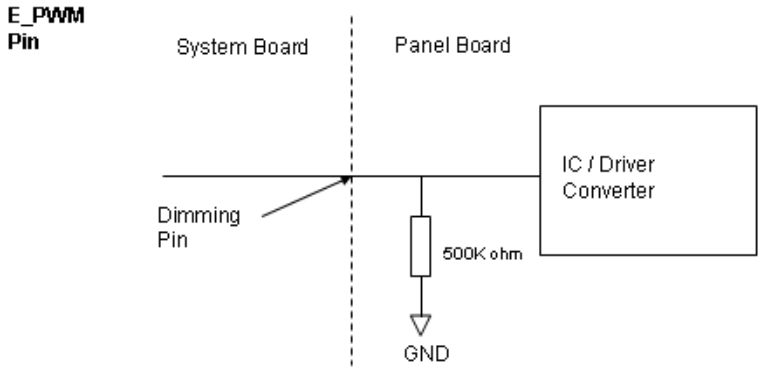

4.4 LVDS INPUT SIGNAL SPECIFICATIONS

4.4.1 LVDS DATA INPUT DATA ORDER (VESA Mode)

LVDS Channel O0	LVDS output	D7	D6	D4	D3	D2	D1	D0
	Data order	OG0	OR5	OR4	OR3	OR2	OR1	OR0
LVDS Channel O1	LVDS output	D18	D15	D14	D13	D12	D9	D8
	Data order	OB1	OB0	OG5	OG4	OG3	OG2	OG1
LVDS Channel O2	LVDS output	D26	D25	D24	D22	D21	D20	D19
	Data order	DE	NA	NA	OB5	OB4	OB3	OB2
LVDS Channel O3	LVDS output	D23	D17	D16	D11	D10	D5	D27
	Data order	NA	OB7	OB6	OG7	OG6	OR7	OR6
LVDS Channel E0	LVDS output	D7	D6	D4	D3	D2	D1	D0
	Data order	EG0	ER5	ER4	ER3	ER2	ER1	ER0
LVDS Channel E1	LVDS output	D18	D15	D14	D13	D12	D9	D8
	Data order	EB1	EB0	EG5	EG4	EG3	EG2	EG1
LVDS Channel E2	LVDS output	D26	D25	D24	D22	D21	D20	D19
	Data order	DE	NA	NA	EB5	EB4	EB3	EB2
LVDS Channel E3	LVDS output	D23	D17	D16	D11	D10	D5	D27
	Data order	NA	EB7	EB6	EG7	EG6	ER7	ER6

4.4.2 LVDS DATA INPUT DAT ORDER (JEIDA Mode)

LVDS Channel O0	LVDS output	D7	D6	D4	D3	D2	D1	D0
	Data order	OG2	OR7	OR6	OR5	OR4	OR3	OR2
LVDS Channel O1	LVDS output	D18	D15	D14	D13	D12	D9	D8
	Data order	OB3	OB2	OG7	OG6	OG5	OG4	OG3
LVDS Channel O2	LVDS output	D26	D25	D24	D22	D21	D20	D19
	Data order	DE	NA	NA	OB7	OB6	OB5	OB4
LVDS Channel O3	LVDS output	D23	D17	D16	D11	D10	D5	D27
	Data order	NA	OB1	OB0	OG1	OG0	OR1	OR0
LVDS Channel E0	LVDS output	D7	D6	D4	D3	D2	D1	D0
	Data order	EG2	ER7	ER6	ER5	ER4	ER3	ER2
LVDS Channel E1	LVDS output	D18	D15	D14	D13	D12	D9	D8
	Data order	EB3	EB2	EG7	EG6	EG5	EG4	EG3
LVDS Channel E2	LVDS output	D26	D25	D24	D22	D21	D20	D19
	Data order	DE	NA	NA	EB7	EB6	EB5	EB4
LVDS Channel E3	LVDS output	D23	D17	D16	D11	D10	D5	D27
	Data order	NA	EB1	EB0	EG1	EG0	ER1	ER0

Note: Because this module is operated by DE only mode, Hsync and Vsync input signals should be set to low logic level or ground. Otherwise, this module would operate abnormally.

The copyright belongs to InnoLux. Any unauthorized use is prohibited.

4.4.3 COLOR DATA INPUT ASSIGNMENT

The brightness of each primary color (red, green and blue) is based on the 8-bit gray scale data input for the color. The higher the binary input, the brighter the color. The table below provides the assignment of color versus data input.

Color		Data Signal																							
		Red								Green								Blue							
		R7	R6	R5	R4	R3	R2	R1	R0	G7	G6	G5	G4	G3	G2	G1	G0	B7	B6	B5	B4	B3	B2	B1	B0
Basic Colors	Black	0	0	0	0	0	0	0	0	0	0	0	0	0	0	0	0	0	0	0	0	0	0	0	0
	Red	1	1	1	1	1	1	1	1	0	0	0	0	0	0	0	0	0	0	0	0	0	0	0	0
	Green	0	0	0	0	0	0	0	0	1	1	1	1	1	1	1	1	0	0	0	0	0	0	0	0
	Blue	0	0	0	0	0	0	0	0	0	0	0	0	0	0	0	0	1	1	1	1	1	1	1	1
	Cyan	0	0	0	0	0	0	0	0	1	1	1	1	1	1	1	1	1	1	1	1	1	1	1	1
	Magenta	1	1	1	1	1	1	1	1	0	0	0	0	0	0	0	0	1	1	1	1	1	1	1	1
	Yellow	1	1	1	1	1	1	1	1	1	1	1	1	1	1	1	1	0	0	0	0	0	0	0	0
	White	1	1	1	1	1	1	1	1	1	1	1	1	1	1	1	1	1	1	1	1	1	1	1	1
Gray Scale Of Red	Red(0) / Dark	0	0	0	0	0	0	0	0	0	0	0	0	0	0	0	0	0	0	0	0	0	0	0	0
	Red(1)	0	0	0	0	0	0	0	1	0	0	0	0	0	0	0	0	0	0	0	0	0	0	0	0
	Red(2)	0	0	0	0	0	0	1	0	0	0	0	0	0	0	0	0	0	0	0	0	0	0	0	0
	:	:	:	:	:	:	:	:	:	:	:	:	:	:	:	:	:	:	:	:	:	:	:	:	:
	:	:	:	:	:	:		:		:		:		:	:	:			:		:	:	:	:	
	Red(253)	1	1	1	1	1	1	0	1	0	0	0	:0	0	0	0	0	0	0	0	0	0	0	0	:0
	Red(254)	1	1	1	1	1	1	1	0	0	0	0	0	0	0	0	0	0	0	0	0	0	0	0	0
	Red(255)	1	1	1	1	1	1	1	1	0	0	0	0	0	0	0	0	0	0	0	0	0	0	0	0
Gray Scale Of Green	Green(0) / Dark	0	0	0	0	0	0	0	0	0	0	0	0	0	0	0	0	0	0	0	0	0	0	0	0
	Green(1)	0	0	0	0	0	0	0	0	0	0	0	0	0	0	0	1	0	0	0	0	0	0	0	0
	Green(2)	0	0	0	0	0	0	0	0	0	0	0	0	0	0	1	0	0	0	0	0	0	0	0	0
	:	:	:	:	:	:	:	:	:	:	:	:	:	:	:	:	:	:	:	:	:	:	:	:	:
	:	:	:	:	:	:	:	:	:	:	:	:	:	:	:	:	:	:	:	:	:	:	:	:	:
	Green(253)	0	0	0	0	0	0	0	0	1	1	1	1	1	1	0	1	0	0	0	0	0	0	0	0
	Green(254)	0	0	0	0	0	0	0	0	1	1	1	1	1	1	1	0	0	0	0	0	0	0	0	0
	Green(255)	0	0	0	0	0	0	0	0	1	1	1	1	1	1	1	1	0	0	0	0	0	0	0	0
Gray Scale Of Blue	Blue(0) / Dark	0	0	0	0	0	0	0	0	0	0	0	0	0	0	0	0	0	0	0	0	0	0	0	0
	Blue(1)	0	0	0	0	0	0	0	0	0	0	0	0	0	0	0	0	0	0	0	0	0	0	0	1
	Blue(2)	0	0	0	0	0	0	0	0	0	0	0	0	0	0	0	0	0	0	0	0	0	0	1	0
	:	:	:	:	:	:	:	:	:	:	:	:	:	:	:	:	:	:	:	:	:	:	:	:	:
	:	:	:	:	:	:	:	:	:	:	:	:	:	:	:	:	:	:	:	:	:	:	:	:	:
	Blue(253)	0	0	0	0	0	0	0	0	0	0	0	0	0	0	0	0	1	1	1	1	1	1	0	1
	Blue(254)	0	0	0	0	0	0	0	0	0	0	0	0	0	0	0	0	1	1	1	1	1	1	1	0
	Blue(255)	0	0	0	0	0	0	0	0	0	0	0	0	0	0	0	0	1	1	1	1	1	1	1	1

Note (1) 0: Low Level Voltage, 1: High Level Voltage

The copyright belongs to InnoLux. Any unauthorized use is prohibited.

4.5 DISPLAY TIMING SPECIFICATIONS

The input signal timing specifications are shown as the following table and timing diagram.

Signal	Item	Symbol	Min.	Typ.	Max.	Unit	Note
LVDS Clock	Frequency	Fc	70	74.8	80.0	MHz	(4)
	Period	Tc	14.3	13.36	12.5	ns	
	Input cycle to cycle jitter	T_{rcl}	Tc-0.2	-	Tc+0.2	ns	(1)
	Input Clock to data skew	TLVCCS		-	280	ps	(2)
	Spread spectrum modulation range	F_{clkin_mod}	0.98*Fc	-	1.02*Fc	MHz	(3)
	Spread spectrum modulation frequency	F_{SSM}	-	-	200	KHz	
Vertical Display Term	Frame Rate	Fr	-	60	-	Hz	Tv=Tvd+Tvb
	Total	Tv	1208	1235	1250	Th	(5)
	Active Display	Tvd	1200	1200	1200	Th	-
	Blank	Tvb	8	35	50	Th	-
Horizontal Display Term	Total	Th	965	1010	1066	Tc	Th=Thd+Thb
	Active Display	Thd	800	800	800	Tc	-
	Blank	Thb	165	210	266	Tc	-

Note : Because this module is operated by DE only mode, Hsync and Vsync input signals are ignored.

INPUT SIGNAL TIMING DIAGRAM

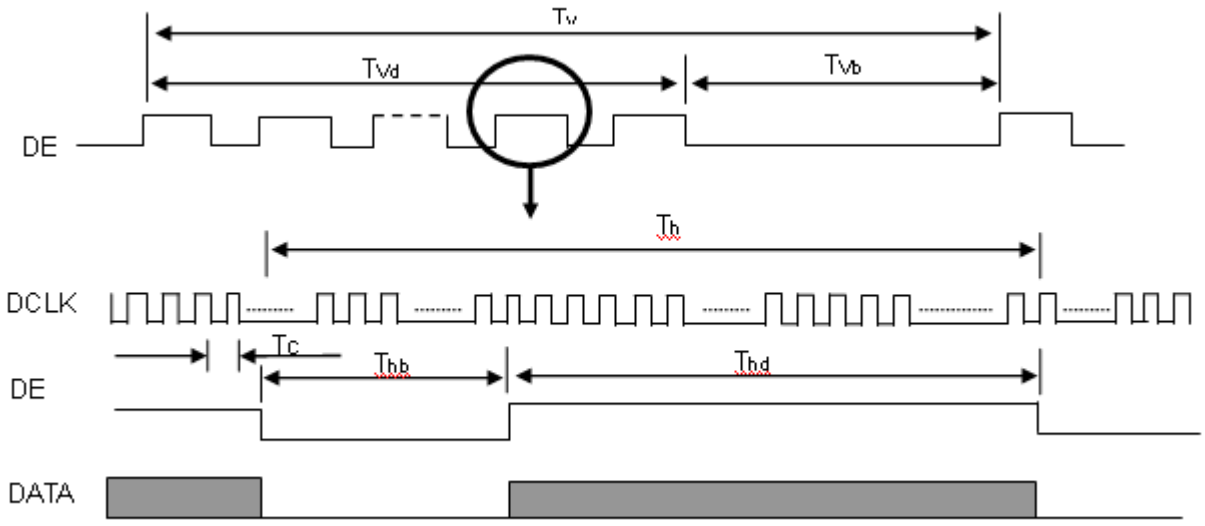

The copyright belongs to InnoLux. Any unauthorized use is prohibited.

Note (1) The input clock cycle-to-cycle jitter is defined as below figures. Trcl = I T_1 – TI

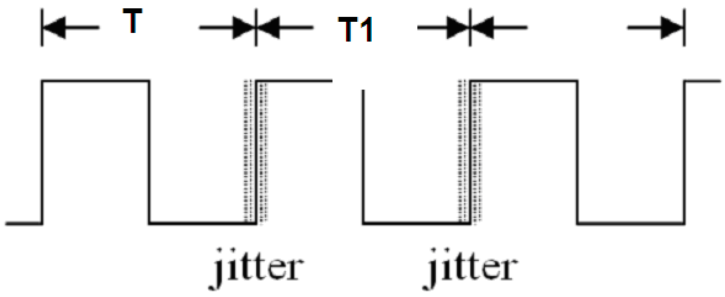

Note (2) Input Clock to data skew is defined as below figures.

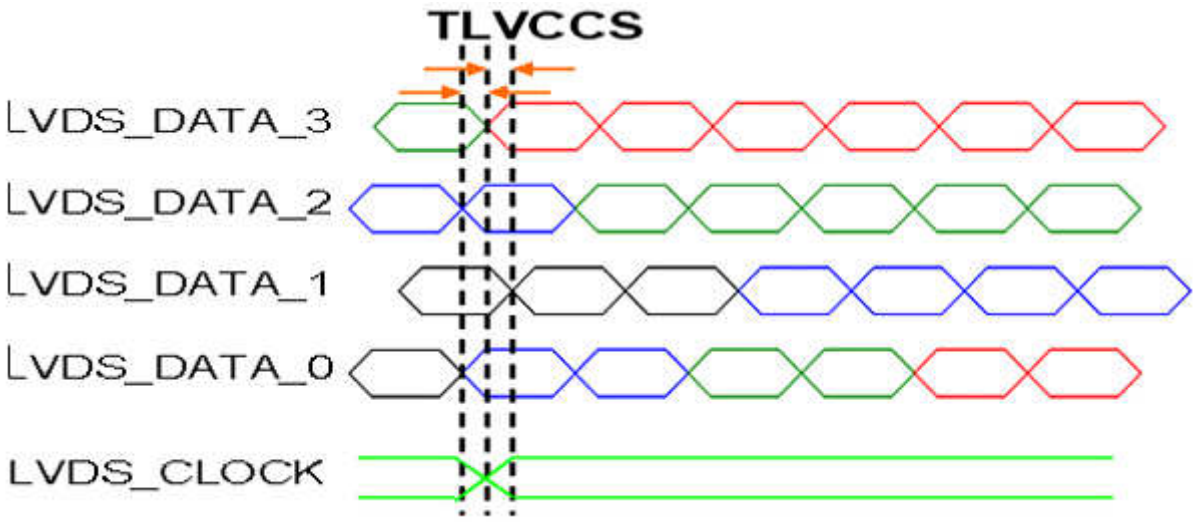

Note (3) The SSCG (Spread spectrum clock generator) is defined as below figures.

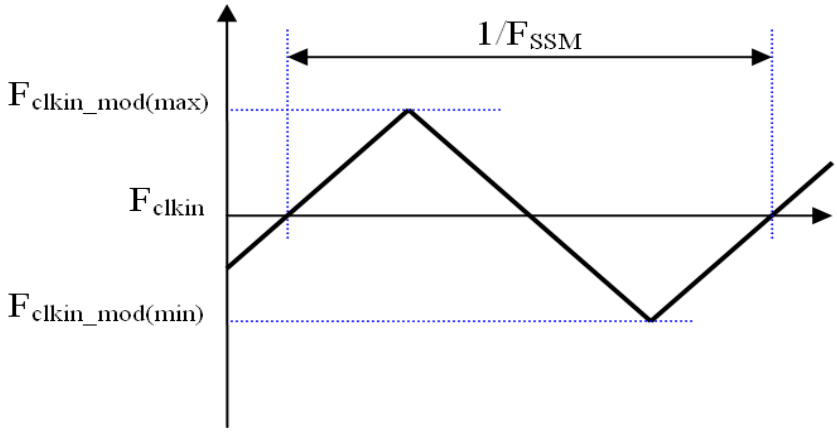

Note (4) Please make sure the range of pixel clock has to follow the below equation:

Fclkin(max) ≧ Fr X Tv X Th

Fr X Tv X Th ≧ Fclkin(min)

Note (5) The Tv(Tvd+Tvb) must be integer, otherwise, the module would operate abnormally.

The copyright belongs to InnoLux. Any unauthorized use is prohibited.

4.6 POWER ON/OFF SEQUENCE

The power sequence specifications are shown as the following table and diagram.

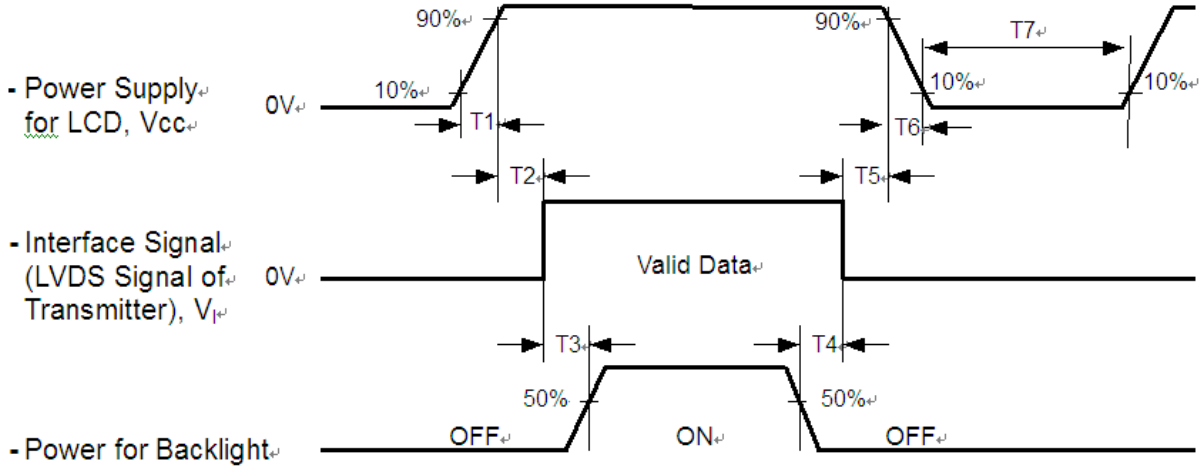

Timing Specifications:

Parameters	Values			Units
	Min	Typ.	Max	
T1	0.5	-	10	ms
T2	0	30	50	ms
T3	200	250	-	ms
T4	100	250	-	ms
T5	0	20	50	ms
T6	0.1	-	100	ms
T7	1000	-	-	ms

Note (1) The supply voltage of the external system for the module input should be the same as the definition of Vcc.

Note (2) When the backlight turns on before the LCD operation of the LCD turns off, the display may momentarily become abnormal screen.

Note (3) In case of VCC = off level, please keep the level of input signals on the low or keep a high impedance.

Note (4) T7 should be measured after the module has been fully discharged between power off and on period.

Note (5) Interface signal shall not be kept at high impedance when the power is on.

Note (6) INX won't take any responsibility for the products which are damaged by the customers not following the Power Sequence.

Note (7) There might be slight electronic noise when LCD is turned off (even backlight unit is also off). To avoid this symptom, we suggest "Vcc falling timing" to follow "t6 spec".

The copyright belongs to InnoLux. Any unauthorized use is prohibited.

5. OPTICAL CHARACTERISTICS

5.1 TEST CONDITIONS

Item	Value	Unit
Ambient Temperature (Ta)	25±2	°C
Ambient Humidity (Ha)	50±10	%RH
Supply Voltage	According to typical value in "ELECTRICAL CHARACTERISTICS"	
Input Signal		
LED Light Bar Input Current Per Input Pin		

5.2 OPTICAL SPECIFICATIONS

The relative measurement methods of optical characteristics are shown in 5.2 and all items are measured at the center point of screen except white variation. The following items should be measured under the test conditions described in 5.1 and stable environment shown in Note (5)

Item		Symbol	Condition	Min.	Typ.	Max.	Unit	Note
Color Chromaticity (CIE 1931)	White	W_x	θ_x=0°, θ_Y =0° CS-2000T	Typ. -0.03	0.308	Typ. +0.03		(1), (5)
		W_y			0.329			
	Red	R_x			0.644			
		R_y			0.341			
	Green	G_x			0.318			
		G_y			0.611			
	Blue	B_x			0.155			
		B_y			0.047			
Center Luminance of White		L_C		400	500	---	cd/m^2	(4), (5)
Contrast Ratio		CR		1440	1800	---	-	(2), (5)
Response Time		T_R	θ_x=0°, θ_Y =0°	---	8	15	ms	(3)
		T_F		---	8	15	ms	
White Variation(adjacent)		δW_a	θ_x=0°, θ_Y =0° USB2000	80	---	---	-	(5), (6)
White Variation(total)		δW_t	θ_x=0°, θ_Y =0° USB2000	70	---	---	-	(5), (6)
Viewing Angle		Θ_{y+}	CR ≧ 10 USB2000	80	89	---	Deg.	(1), (5)
		Θ_{y-}						
		Θ_{x+}						
		Θ_{x-}						

The copyright belongs to InnoLux. Any unauthorized use is prohibited.

Note (1) Definition of Viewing Angle (θx, θy):

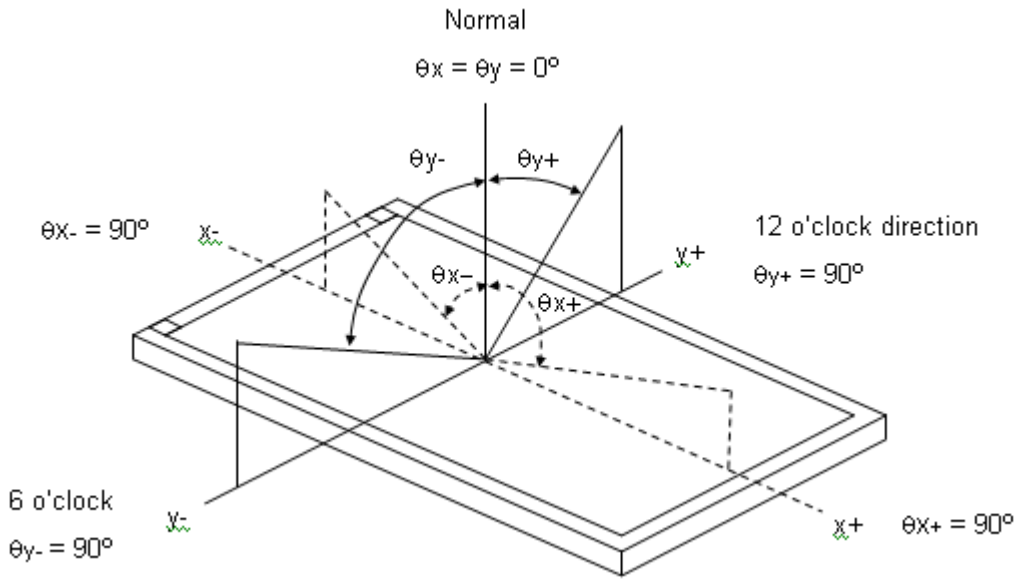

Note (2) Definition of Contrast Ratio (CR):

The contrast ratio can be calculated by the following expression.

Contrast Ratio (CR) = L255 / L0

L255: Luminance of gray level 255

L 0: Luminance of gray level 0

CR = CR (5)

CR (X) is corresponding to the Contrast Ratio of the point X at Figure in Note (4)

Note (3) Definition of Response Time (T_R, T_F):

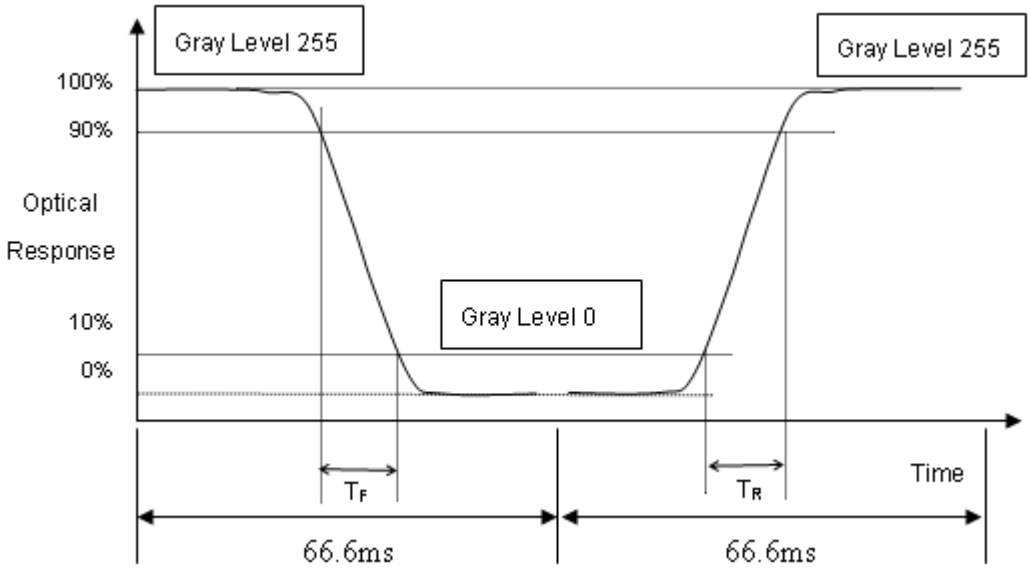

The copyright belongs to InnoLux. Any unauthorized use is prohibited.

Note (4) Definition of Luminance of White (L_C):

Measure the luminance of gray level 255 at center point

$L_C = L (5)$

L (x) is corresponding to the luminance of the point X at the following figure.

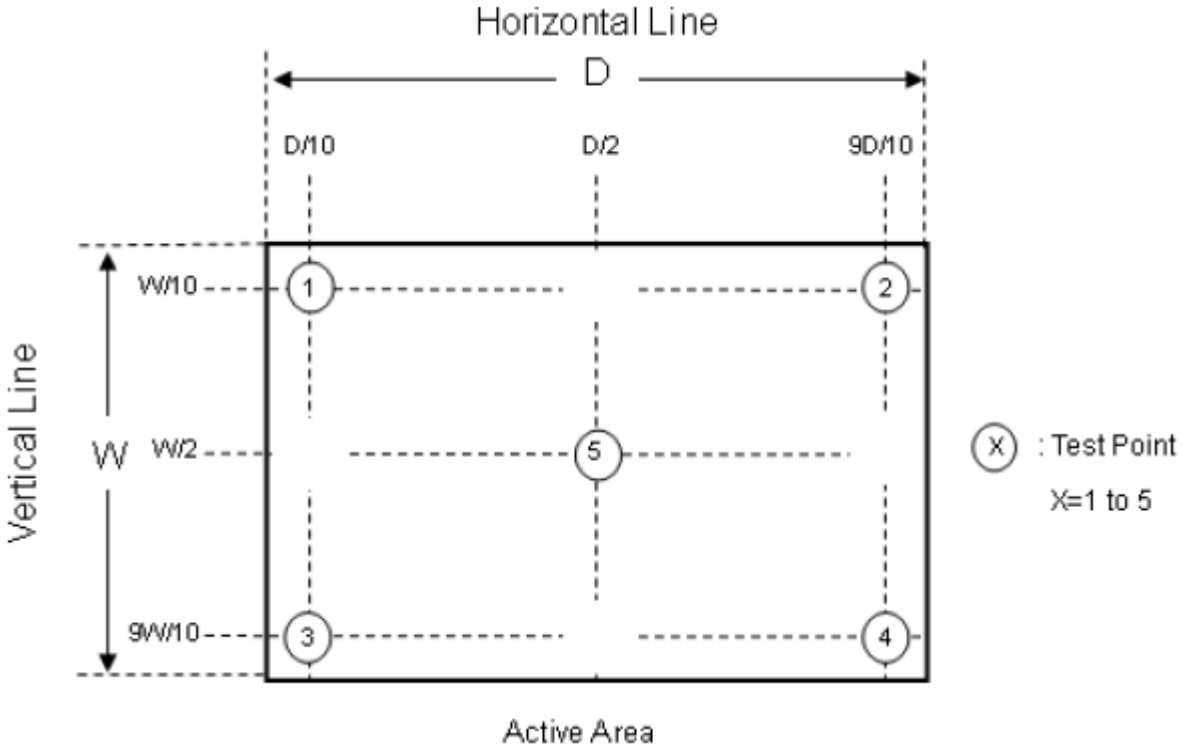

Note (5) Measurement Setup:

The LCD module should be stabilized at given temperature for 60 minutes to avoid abrupt temperature change during measuring. In order to stabilize the luminance, the measurement should be executed after lighting Backlight for 60 minutes in a windless room.

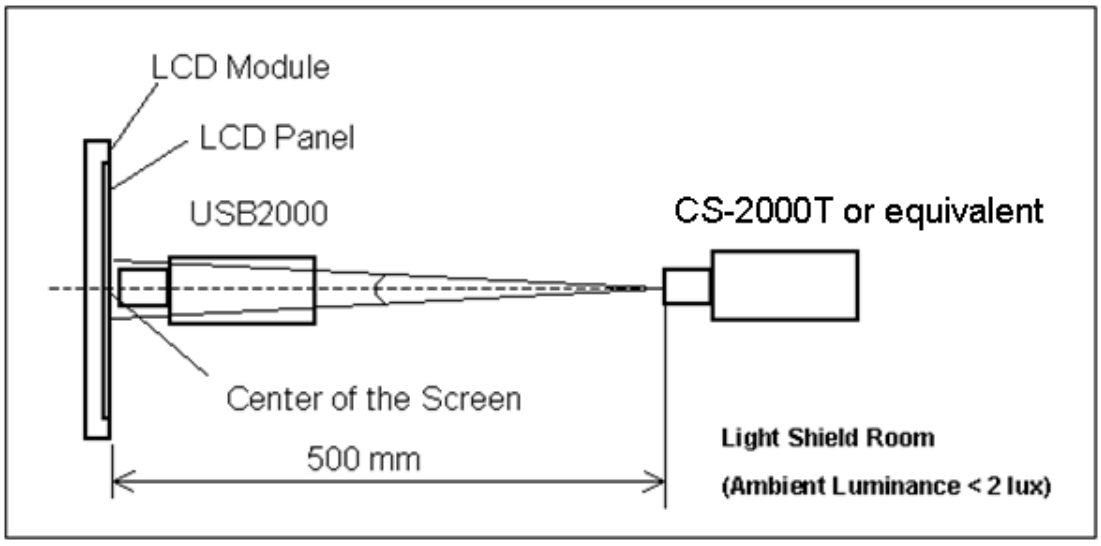

Note (6) There is the Uniformity Measurement below:

The copyright belongs to InnoLux. Any unauthorized use is prohibited.

'L_{bright} ' represents the Luminance of the point that is brighter than the other point to be compared.

'L_{dark} ' represents the Luminance of the point that is darker than the other point to be compared.

Measuring points are shown in the following Fig.

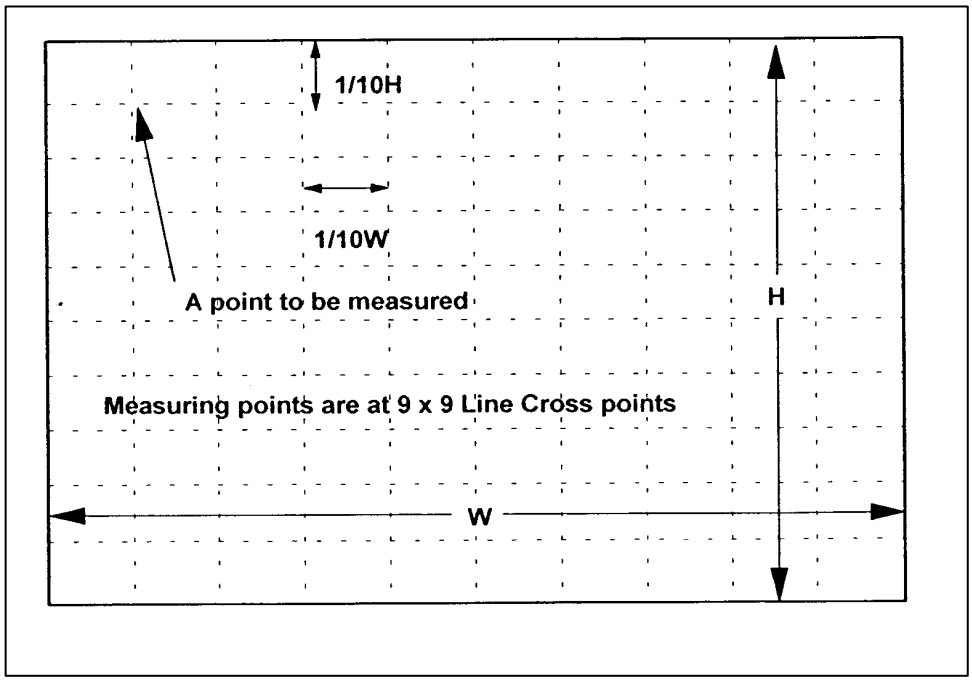

When the backlight is on with all pixels in the white (maximum gray) level, the luminance uniformity is defined as follows;

Where:

L_{bright}: The luminance of the brightest part of the area

L_{dark}: The luminance of the darkest part of the area

1. Adjacent Area

$$\text{Luminance Uniformity} = \frac{L_{dark}}{L_{bright}} \geqq 0.80$$

over a circular area of 10mm diameter placed anywhere on the screen.

2. Screen Total

$$\text{Luminance Uniformity} = \frac{L_{dark}}{L_{bright}} \geqq 0.70$$

over the entire screen.

The copyright belongs to InnoLux. Any unauthorized use is prohibited.

6. RELIABILITY TEST ITEM

Items	Required Condition	Note
Temperature Humidity Bias (THB)	Ta= 50℃, 80%RH, 240hours	
High Temperature Operation (HTO)	Ta= 50℃, 240hours	
Low Temperature Operation (LTO)	Ta= 0℃, 240hours	
High Temperature Storage (HTS)	Ta= 60℃, 240hours	
Low Temperature Storage (LTS)	Ta= -20℃, 240hours	
Vibration Test (Non-operation)	Acceleration: 1.5 G Wave:sine Frequency: 10 - 300 Hz Sweep: 30 Minutes each Axis (X, Y, Z)	
Shock Test (Non-operation)	Acceleration: 50 G Wave: Half-sine Active Time: 11 ms Direction : ± X, ± Y, ± Z.(one time for each Axis)	
Thermal Shock Test (TST)	-20℃/30min , 60℃ / 30min , 100 cycles	
On/Off Test	25℃ ,On/10sec , Off /10sec , 30,000 cycles	
ESD (Electro Static Discharge)	Contact Discharge: ± 8KV, 150pF(330Ω)	
	Air Discharge: ± 15KV, 150pF(330Ω)	
Altitude Test	Operation:10,000 ft / 24hours Non-Operation:30,000 ft / 24hours	

Note (1) criteria : Normal display image with no obvious non-uniformity and no line defect.

Note (2) Evaluation should be tested after storage at room temperature for more than two hour

Note (3) At testing Vibration and Shock, the fixture in holding the module has to be hard and rigid enough so that the module would not be twisted or bent by the fixture.

The fixing condition is shown as below:

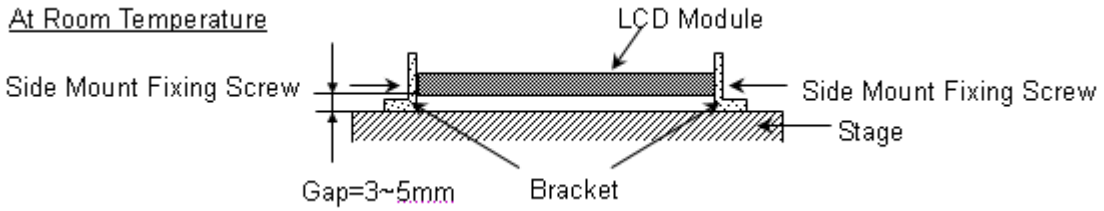

The copyright belongs to InnoLux. Any unauthorized use is prohibited.

7. PACKING

7.1 PACKING SPECIFICATIONS

(1) 5 LCD modules / 1 Box

(2) Box dimensions: 532(L) * 283(W) * 488(H) mm

(3) Weight: approximately: (13.7) kg (5 modules per box)

7.2 PACKING METHOD

Packaging method is shown as following figures.

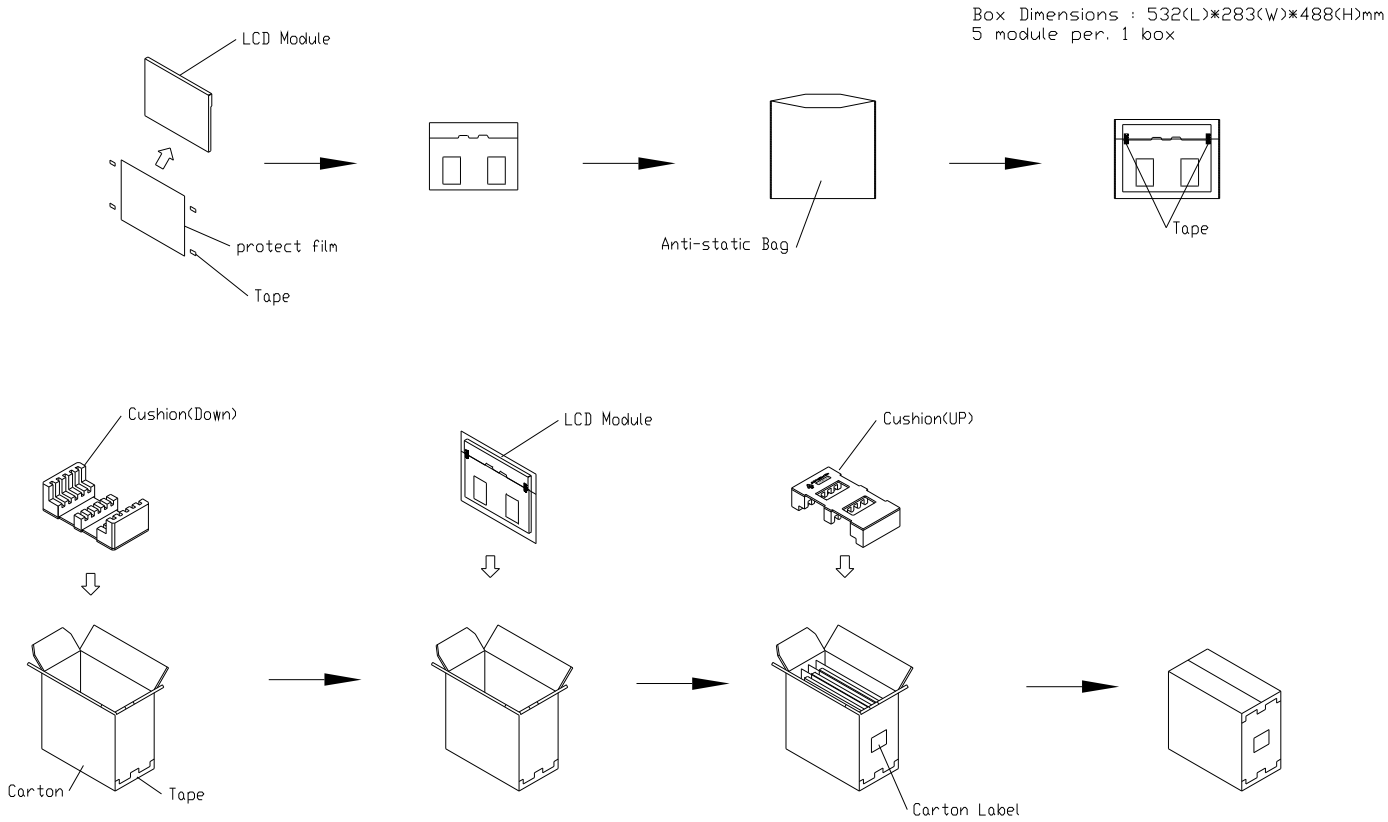

Figure. 7-1 Packing method

The copyright belongs to InnoLux. Any unauthorized use is prohibited.

7.3 PALLET

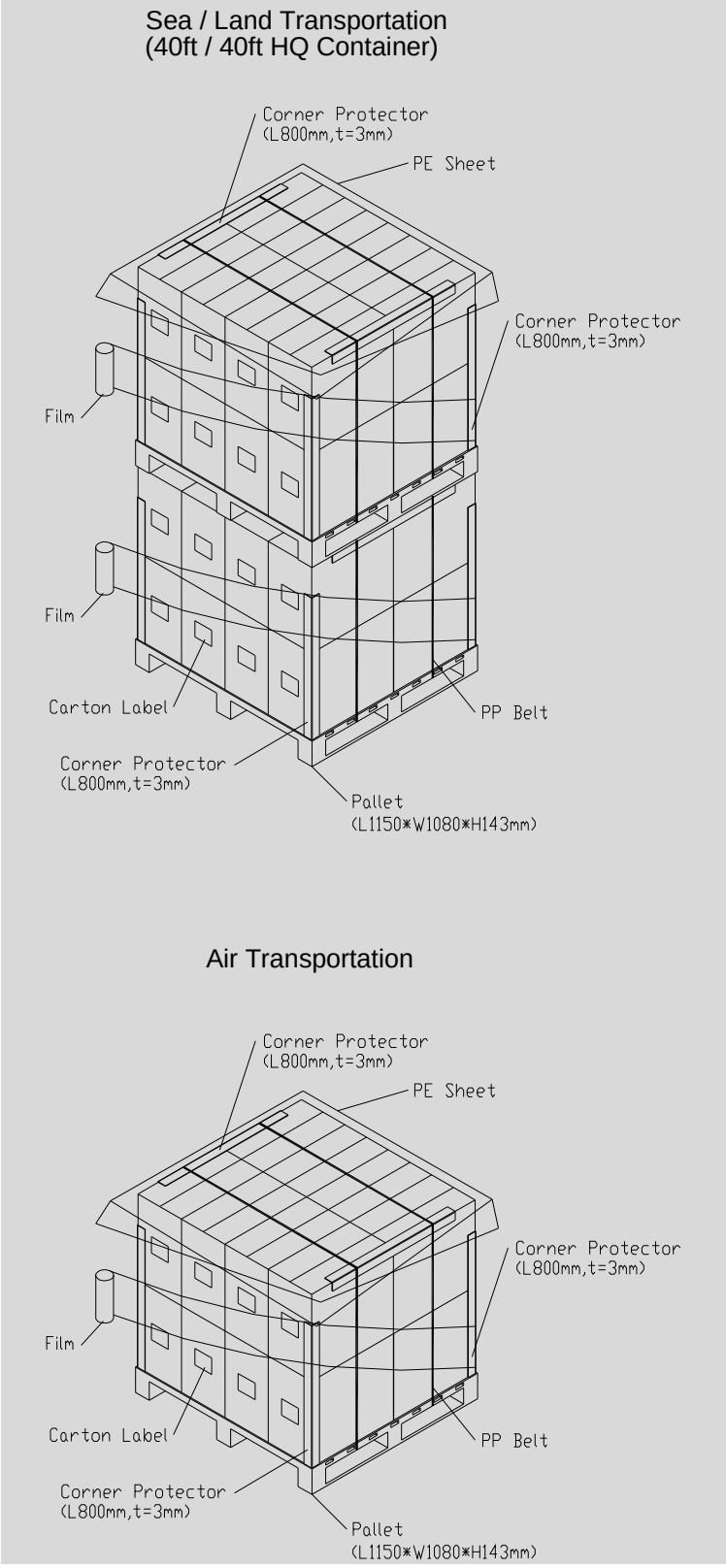

Figure. 7-2 Packing method

The copyright belongs to InnoLux. Any unauthorized use is prohibited.

7.4 UNPACKING METHOD

UN-packaging method is shown as following figures.

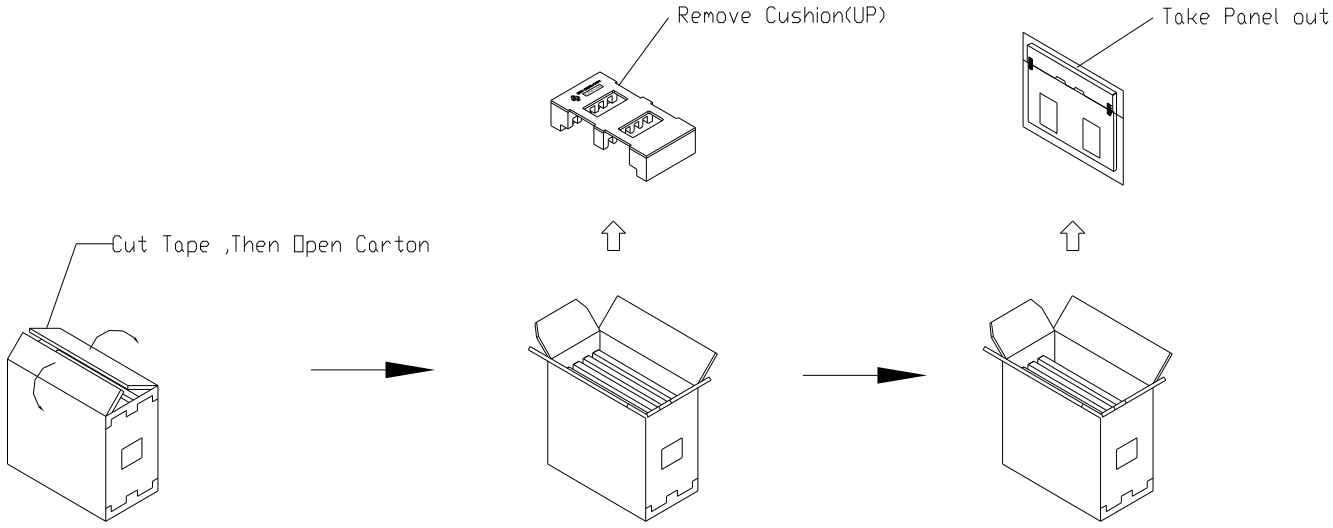

Figure. 7-3 Un-packing method

8. INX MODULE LABEL

The barcode nameplate is pasted on each module as illustration, and its definitions are as following explanation.

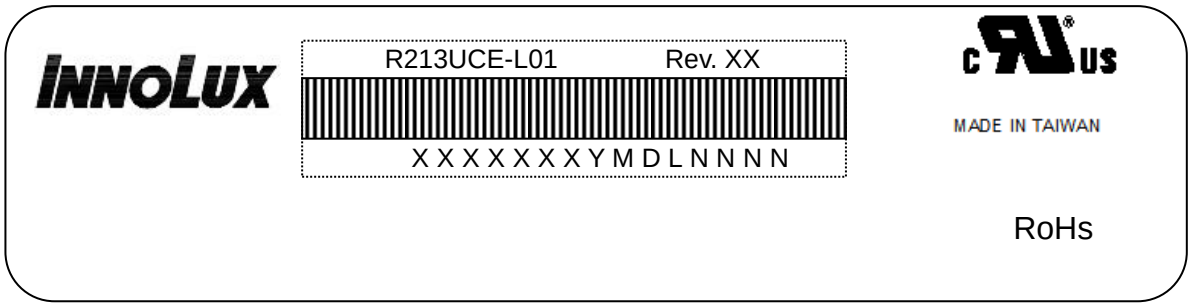

(a) Model Name: R213UCE-L01

(b) Revision: Rev. XX, for exaple: A0, A1… B1, B2… or C1, C2…etc.

(c) INX barcode definition:

Serial ID: XX-XX-X-XX-YMD-L-NNNN

Code	Meaning	Description
XX	INX internal use	-
XX	Revision	Cover all the change
X	INX internal use	-
XX	INX internal use	-

The copyright belongs to InnoLux. Any unauthorized use is prohibited.

YMD	Year, month, day	Year: 0~9, 2010=0, 2011=1, 2012=2… Month: 1~12=1, 2, 3, ~, 9, A, B, C Day: 1~31=1, 2, 3, ~, 9, A, B, C, ~, W, X, Y, exclude I, O, and U.
L	Product line #	Line 1=1, Line 2=2, Line 3=3, …
NNNN	Serial number	Manufacturing sequence of product

9. PRECAUTIONS

9.1 ASSEMBLY AND HANDLING PRECAUTIONS

(1) Do not apply rough force such as bending or twisting to the module during assembly.

(2) To assemble or install module into user's system can be only in clean working areas. The dust and oil may cause electrical short or worsen the polarizer.

(3) It's not permitted to have pressure or impulse on the module because the LCD panel and Backlight will be damaged.

(4) Always follow the correct power sequence when LCD module is connecting and operating. This can prevent damage to the CMOS LSI chips during latch-up.

(5) Do not pull the I/F connector in or out while the module is operating.

(6) Do not disassemble the module.

(7) Use a soft dry cloth without chemicals for cleaning, because the surface of polarizer is very soft and easily scratched.

(8) It is dangerous that moisture come into or contacted the LCD module, because moisture may damage LCD module when it is operating.

(9) High temperature or humidity may reduce the performance of module. Please store LCD module within the specified storage conditions.

(10)When ambient temperature is lower than 10ºC may reduce the display quality. For example, the response time will become slowly.

9.2 STORAGE PRECAUTIONS

(1) Do not leave the module in high temperature, and high humidity for a long time. It is highly recommended to store the module with temperature from 0℃ to 35℃ and relative humidity of less than 70%

(2) Do not store the TFT-LCD module in direct sunlight

(3) The module should be stored in dark place. It is prohibited to apply sunlight or fluorescent light in storing

9.3 OPERATION PRECAUTIONS

(1) The LCD product should be operated under normal condition.

Normal condition is defined as below :

Temperature : 20±15℃

Humidity: 65±20%

Display pattern : continually changing pattern(Not stationary)

The copyright belongs to InnoLux. Any unauthorized use is prohibited.

(2) If the product will be used in extreme conditions such as high temperature, high humidity, high altitude ,display pattern or operation time etc…It is strongly recommended to contact INX for application engineering advice . Otherwise, its reliability and function may not be guaranteed.

9.4 SAFETY PRECAUTIONS

(1) If the liquid crystal material leaks from the panel, it should be kept away from the eyes or mouth. In case of contact with hands, skin or clothes, it has to be washed away thoroughly with soap.

(2) After the module's end of life, it is not harmful in case of normal operation and storage.

9.5 SAFETY STANDARDS

The LCD module should be certified with safety regulations as follows:

(1) UL62368-1 or updated standard.

(2) IEC62368-1 or updated standard.

9.6 OTHER

When fixed patterns are displayed for a long time, remnant image is likely to occur.

The copyright belongs to InnoLux. Any unauthorized use is prohibited.

Appendix. OUTLINE DRAWING

The copyright belongs to InnoLux. Any unauthorized use is prohibited.

REV	EC NUMBER	DESCRIPTION	DATE
A		First Release	2010/11/25
B	EN1118056	Notify Backs Thickness M/H=14.25mm	2010/12/07

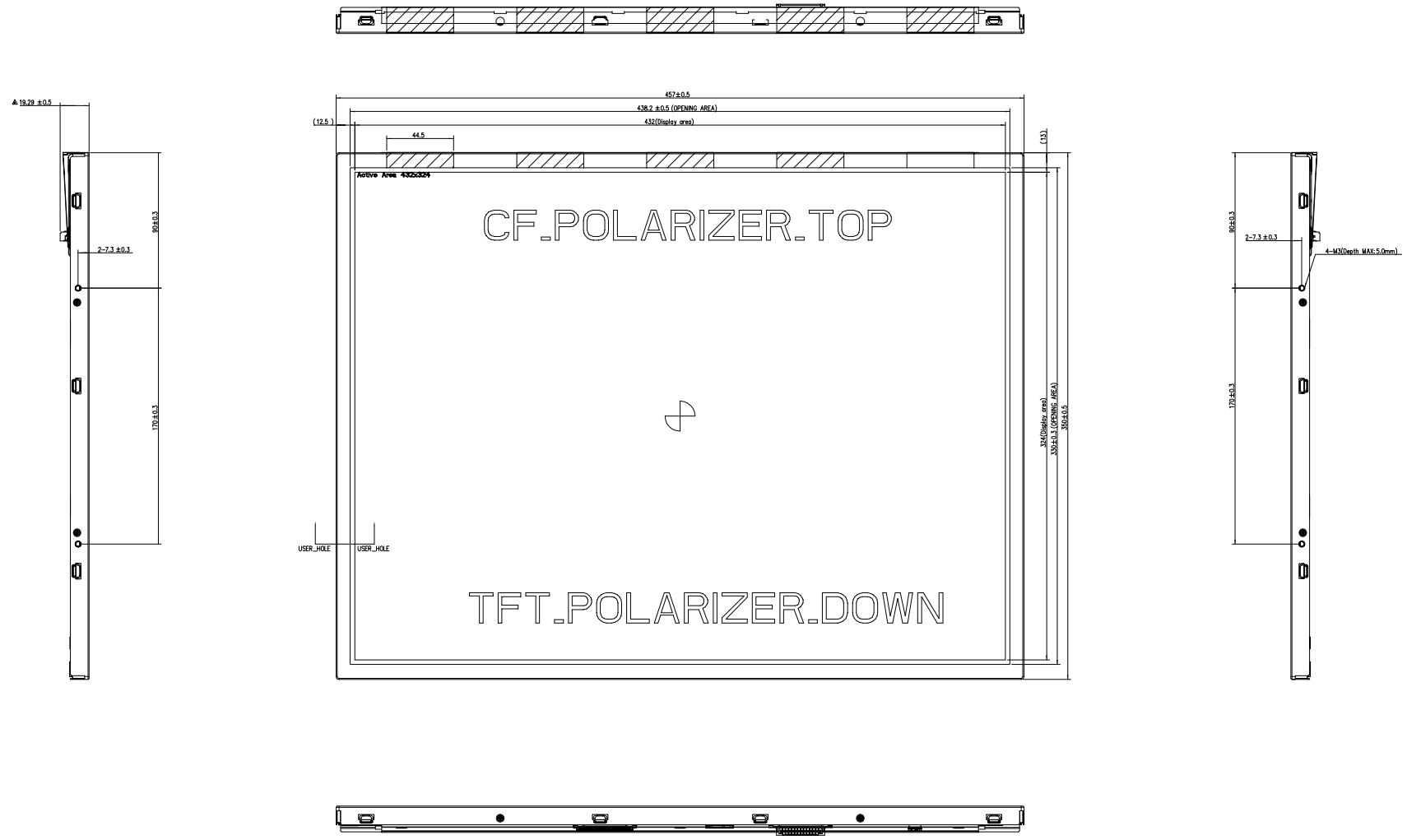

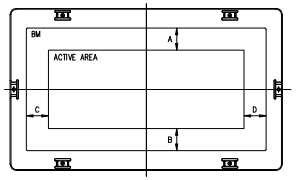

BM WIDTH VARIATION : |A-B|,|C-D|,=1.5 (MAX.)
FIG.1

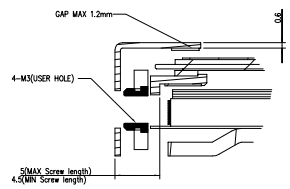

SECTION USER_HOLE-USER_HOLE
SCALE 5:1

NOTES:
1.UNSPECIFIED TOLERANCE: ±0.5mm
2.MODULE BACKSIDE CAN'T WITHSTAND ANYTHING EXCEPT USER HOLE.
3.DISPLAY AREA POSITION TOLERANCE: |A-B|<=1.5mm & |C-D|<=1.5mm(SEE FIG.1).
4.USER HOLE
4-1.SCREW HOLES TYPE:
4-2.STANDOFF TYPE :
STANDOFF: M3, PITCH=0.5/MACHINE, MAX. TORQUE=5 kgf-cm, MAX. DEPTH=5 mm

5.CONNECTOR TYPE:
CON_1:P-TWO,187098-30091
CON_2: FCN,JH2-D4-143N

APPROVED	SKF	PART NUMBER: DN11190058		B
CHECKED	MSH.H	PART DESCRIPTION: MSH_MODULE_BACKSIDE-LCD_IR3005		1/2
DESIGNED	EASON.TSENG			A0

REV	EC NUMBER	DESCRIPTION	DATE
A	—	First Release	2018/11/28
B	2019[illegible]	Modify Double Tolerance 10.01-±0.25mm	2019/10/17

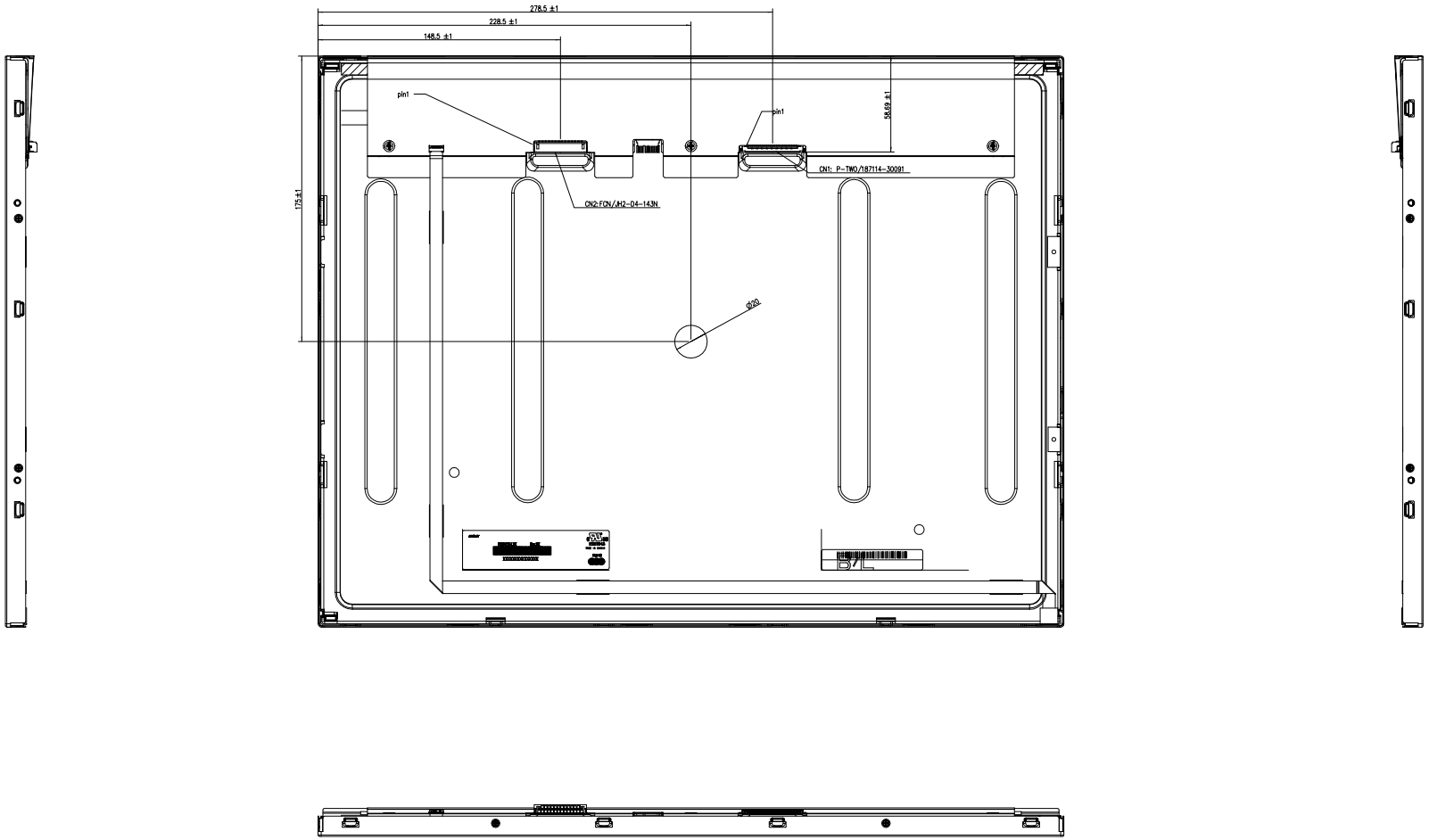

CONTROL DIMENSION	CONTROL DIMENSION	DATE: 2019/10/17	SCALE: 1:1	UNIT: mm
APPROVED	SY.F	PART NUMBER: DN11119058		REVISION: B
CHECKED	WISH.H	PART DESCRIPTION: MSV_MODULE_RS232/EC-LIN_IP2005		PART NUMBER: 2/2
DESIGNED	EASON.TSENG			SIZE: A0