瑞华高科技电子工业园（厦门）有限公司
Suiwa High Technology Electronic Industries (Xiamen)Co.,Ltd.

地址:中国福建省厦门市吕岭路 1776 号
Address:1776,Lvling Road, Xiamen,Fujian 361009,China

Certificate of Conformance
符合性声明书

1.Customer Information:
客户信息：

Customer Name: 客户名称：	鈺緯科技开发股份有限公司		
Customer Part Number: 客户零件号：	5827049 DDW REV5	Part Revision: 零件版本：	REV5
P.O.&Line item: 订单号及序列号：	4100039358	Customer Spec.: 客户协议&标准：	5342004GSP

2.SUIWA Information:
瑞华信息：

SUIWA Part Number: 瑞华零件号：	DS18001	Part Revision: 零件版本：	SB1
Item 序号	Quantity shipped 发货数量	Date Code 周期	Date of Shipment 发货日期
1			
2			

3.Environmental Storage Conditions:
环境贮存条件：

Temperature: 温度：	23±3℃	Humidity: 湿度：	35%-70%

4.Quality Statements and Statement of Compliance:
质量声明：

This Document Certifies That Part Described Above is Compliance with Purchase Order, Drawing, Customer Specification including Special Purchase Order Conditions.
此文件证明上述物料符合订单、图纸、客户标准以及其他特殊采购条款要求。

The Document is Signed by a Certified SUIWA's Representative who Confirms the Completion of all required inspections and tests including the followings as per customer's requirements:
此证明由我司质量代表签字，确认产品已按照客户要求完成以下所有的检验与测试：

RoHS 要求 RoHS Requirement	■满足欧盟指令 2011/65/EU 经修订（EU）2015/863 ROHS 要求。 Compliance with EU Directive 2011/65/EU as amended by (EU) 2015/863 (Rohs dierective). □无需 RoHS 要求 Non-RoHS
离子污染测试 Ionic Contamination Test	达到离子污染测试要求<4ug/inch^2 To meet the requirements of the ionic contamination test <4ug/inch^2

All information listed on this document is hereby certified in writing to be true.
保证该文件中提到的信息是真实可信的。

Quality Representative Sign & Stamp: 质量代表签字：	Date: 日期：

瑞华高科样品承认书
SUIWA FPC SAMPLE APPROVAL

WWW.SWFLEX.COM

客户 CUSTOMER 鈺緯科技开发股份有限公司

机型 Model FPC

料号 Part NO. 5827049 DDW REV5

编号 Suiwa NO. DS18001-SB1

瑞华高科技电子工业园（厦门）有限公司 Suiwa High Technology Electronic Industries (Xiamen) Co., Ltd.		客户确认 Customer Acknowledgement		
制 作 Prepared by	审 核 Checked by	姓名 name	职务 position	签名&印章 Sign&Compony stamp
柯秋霞	张丽芹			

瑞华高科技电子工业园（厦门）有限公司

Suiwa High Technology Electronic Industries (Xiamen) Co., Ltd.

TEL: 0086(0592) 5920000
FAX: 0086(0592) 5920123
E-mail: ZiQin@swflex.com

Add:1776.Lvling Road,Xiamen City,Fujian Province,China.
Post Code:361009

瑞华高科技电子工业园（厦门）有限公司-出货检验报告

Suiwa High Technology Electronic Industries (Xiamen) Co., Ltd.

Inspection Report Date:

Customer 客户	Part No. 客户料号	Suiwa NO. 瑞华编号	Quantity 数量	Approved By 审核	Prepared By 制作
鈺緯科技开发股份有限公司	5827049 DDW REV5	DS18001-SB1		张丽芹	柯秋霞

Sample Inspection result 样品检验结果

Good board quantity 良板数量		(Special adotpion quantity for sampling only) 样品特采轻微缺陷数量	

1.Material材质 **(ok)Pass / 通过** **×Fail / 不通过** **～Not Related / 无关**

Item项目	Requirements 要求							Results结果
Structure结构	( ) Single Side 单面 (√) Double Side 双面 ( ) Multi-Layer Board 多层 ( ) Dual access 镂空 ( ) Rigid flex 软硬结合板							
Principal Materia 主要材料	Flexible Copper clad Laminated 柔性覆铜板	Base Film基材	(√)PI聚酰亚胺	( )FR4	1	mil	Thickness厚度	OK
		Copper铜箔	(√)Rolled Annealed压延铜	( )Electro deposited电解铜	0.5	oz		OK
		Adhesive胶	(√)Epoxy环氧树脂胶	( )Acrylic 压克力胶	13	um		OK
	Coverlay 保护膜	Cover Film基材	(√)PI聚酰亚胺	( )PET聚脂	1	mil		OK
		Adhesive胶	(√)Epoxy环氧树脂胶	( )Acrylic压克力	25	um		OK
	Stiffener 补强板	(√)PI						OK
	Adhesive胶 DOME弹片							～
Printing Type印刷类型	( )Legend字符 ( )正面 ( )反面 Color颜色 :White		( )Silver Paste银浆 ( )正面 ( )反面		(√)Dielectric resist 绝缘层 (√)正面 (√)反面 Color颜色：GREEN			～
Component 组件	( )DIP.直插式.		(√)SMT表面贴装.		( )Other其它方式.			OK

2.Appearance外观 **(ok)Pass / 通过** **×Fail / 不通过** **～Not Related / 无关**

Items 项目	Requirement（s）要求	Result结果
Date Code日期编号	( ) YYWW ( ) WWYY (√) Other其它：YYMMDD	OK
UL Indication UL标识	UL Code. UL编号.	～
Visual Inspection外观检验	100% visual inspection and tally with customer specification.100%目视检验全部符合客户要求.	OK

3.Test Items 测试项目

Items 项目	Test conditions 测试条件	Specification规格	Test method测试方法	Result结果
Plating or Coating Adhesion Test 镀层/油墨附着力测试	--	No protective substance on the surface of the 3M tape 3M胶带表面没有附有保护物质	According to IPC-TM-650 依据IPC-TM-650	OK
Solderability test 可焊性测试	Temp温度:245±5℃ Time时间:3+1/-0Sec	The non-wetting area of every solder mask should not more than 5%. 每个焊盘上未沾锡面积不超过5%	According to IPC-TM-650 依据IPC-TM-650	OK
Peeling strength test 剥离强度测试	--	Coverlay peeling strength & Stiffener peeling strength: Agreed by both supplier and customer 保护膜剥离强度/补强剥离强度：依供需双方协议	According to IPC-TM-650 依据IPC-TM-650	OK
X-Ray 测试(Nickel & Gold)	--	Nickel & gold thickness are according to the customer's requirement 镍金厚度依照客户要求	According to IPC-4552 依据IPC-4552	OK
Thermal stress test 热应力测试	Temp温度:288±5℃ Time时间:10+1/-0Sec	No delamination or crack on the FPC through the visual inspection 试验后FPC目视无分层或裂开	According to IPC-TM-650 依据IPC-TM-650	OK
Electrical Requirements电气要求	Test conditions 测试条件	Specification规格	Test method测试方法	Result结果
Continuity and isolation test 电路连通性及电路短路试验	According to customer's requirement 依客户要求	100% test and no open/short can be found. 100% 检测不能有断/短路现象	According to IPC-9252 依据IPC-9252	OK

4.Measured Dimension尺寸: (unit单位:mm)

NO. 编号	Specication(s)规格	Tolerance公差		Measured Data测量数据					Result结果
1	57	0.5	-0.5	56.9242	56.9185	56.9473			OK
2	23.7	0.3	-0.3	23.6923	23.6982	23.6850			OK
3	7.2	0.3	-0.3	7.1979	7.1897	7.1854			OK
4	7.3	0.3	-0.3	7.2840	7.2709	7.2790			OK
5	0.76	0.15	-0.15	0.8212	0.8103	0.8061			OK
6	7	0.3	-0.3	6.9604	6.9608	6.9584			OK
7	1.7	0.3	-0.3	1.6957	1.6878	1.6823			OK
8	43.8	0.3	-0.3	43.7856	43.7577	43.7673			OK
9	13.11	0.15	-0.3	13.0892	13.1482	13.1589			OK
10	8.5	0.3	-0.3	8.4429	8.4525	8.4457			OK
11	1.6	0.3	-0.3	1.5766	1.5829	1.5222			OK
12	25	0.3	-0.3	24.9411	24.8852	25.0093			OK
13	5.5	0.3	-0.3	5.4058	5.5497	5.5232			OK
14	0.5	0.1	-0.1	0.5119	0.5025	0.5074			OK
15	8.5	0.05	-0.05	8.4807	8.4609	8.4704			OK
16	7.5	0.03	-0.03	7.5006	7.4950	7.4961			OK
17	0.5	0.02	-0.02	0.4994	0.4966	0.4965			OK
18	0.3	0.035	-0.15	0.2995	0.2938	0.2941			OK
19	0.3	0.15	-0.15	0.2935	0.2943	0.2857			OK
20	3.8	0.3	-0.3	3.7478	3.8276	3.8614			OK
21	4	0.3	-0.3	3.9961	3.9933	3.9923			OK
22	2	0.3	-0.3	1.9961	1.9844	1.9860			OK
23	0.2	0.15	-0.15	0.1870	0.1960	0.1978			OK
24	0.2	0.15	-0.15	0.1889	0.1908	0.1842			OK
25	0.2	0.15	-0.15	0.1992	0.1970	0.1841			OK
26	1.7	0.3	-0.3	1.6928	1.6923	1.6883			OK
27	0.8	0.3	-0.3	0.7859	0.7812	0.7801			OK
28	0.2	0.03	-0.03	0.1820	0.1840	0.1830			OK
29	0.18	0.05	-0.05	0.1660	0.1650	0.1680			OK
30	0.3	0.03	-0.05	0.2990	0.3010	0.3020			OK

5827049

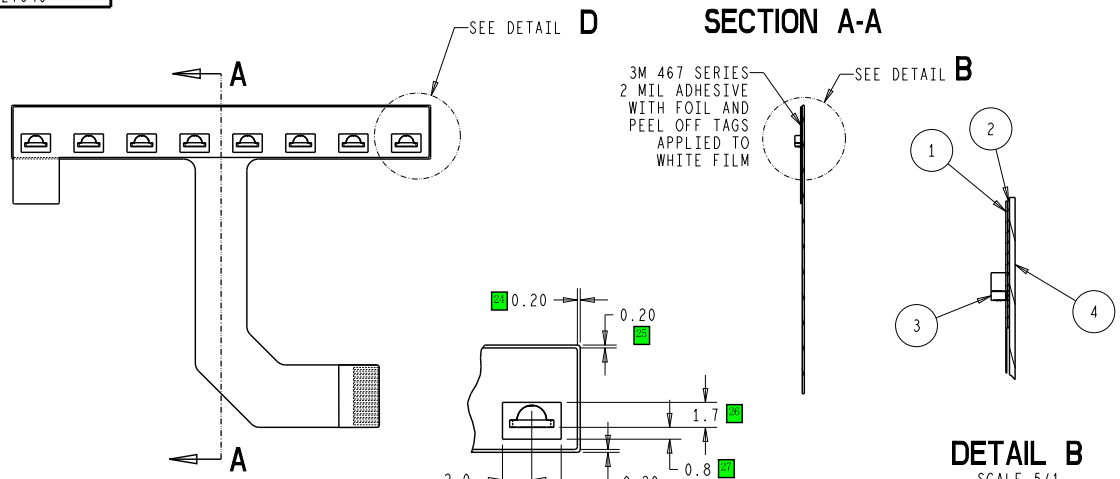

SECTION A-A

DETAIL D
SCALE 4/1

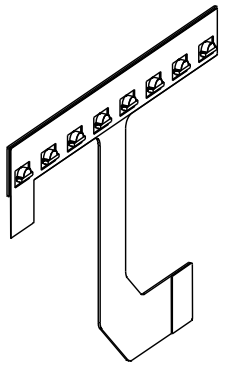

DETAIL B
SCALE 5/1

ITEM NO	QTY	PART NUMBER	DESCRIPTION
1	1	5827049-ADHESIVE	.002" 3M 467 SERIES
2	1	5827049-WHITE	.002" WHITE PET W/ .002" 3M 9471LE
3	8	5827049_APFA3011	KINGSBRIGHT LED
4	1	5827049_FLEX	FLEX ALARM BAR

PIN	NAME	LOCATION
1	LTBAR_5V	DS1,DS2,DS3,DS4 (+)
2	LB_RED	DS1,DS2 Red (-)
3	LB_GRN	DS1,DS2 Green (-)
4	LB_BLU	DS1,DS2 Blue (-)
5	WIFI_RED	DS3,DS4 Red (-)
6	WIFI_GRN	DS3,DS4 Green (-)
7	WIFI_BLUE	DS3,DS4 Blue (-)
8	PWR_RED	DS5,DS6 Red (-)
9	PWR_GRN	DS5,DS6 Green (-)
10	PWR_BLU	DS5,DS6 Blue (-)
11	AS_RED	DS7,DS8 Red (-)
12	AS_GRN	DS7,DS8 Green (-)
13	AS_BLU	DS7,DS8 Blue (-)
14	LTBAR_5V	DS5,DS6,DS7,DS8 (+)
15	NC	
16	NC	

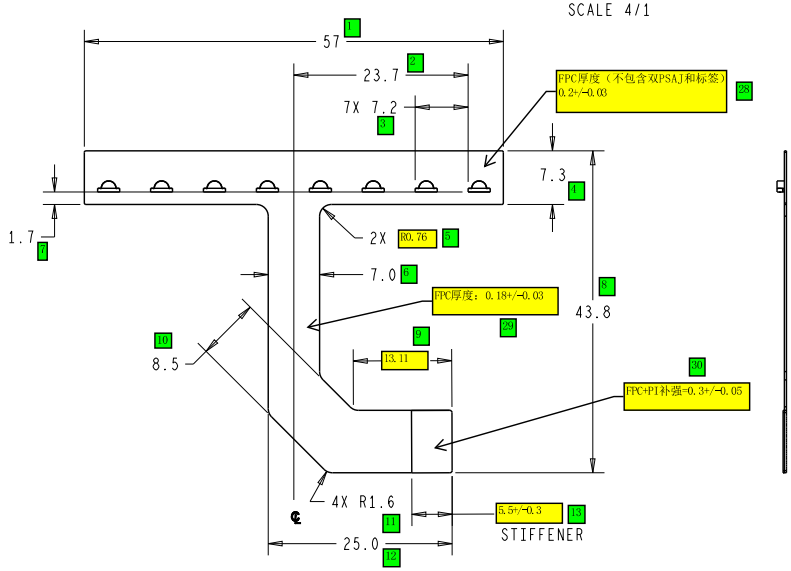

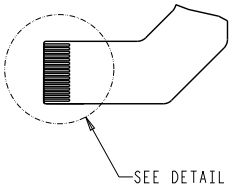

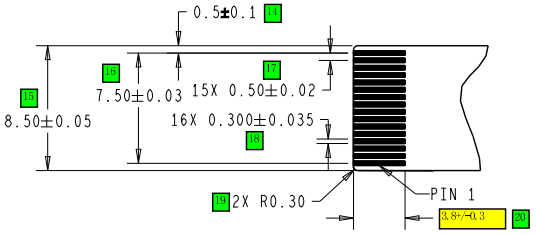

DETAIL C
SCALE 4/1

NOTES:

1. THIS PART TO BE LABELED PER GEHC DOCUMENT 46-274914, CLASS V
2. MANUFACTURE AND TEST PER GEHC DOCUMENT 2269126GSP
3. SURFACE FINISH: ENIG 3.0um MINIMUM NI, 0.076um MINIMUM AU
4. BASE COPPER: 1/2oz RA COPPER
5. COPPER PLATING 0.473 MIL ABSOLUTE MIN
6. MAXIMUM ALLOWABLE REDUCTIONS DUE TO PINHOLES NICKS OR TRACES AND LINE SHRINKAGE TO BE 10%
7. MATERIAL STACK-UP FOR 5827049_FLEX:
   a. 6.0 MIL POLYIMIDE - STIFFENER
   b. 1.0 MIL ADHESIVE
   c. 1.0 MIL POLYIMIDE - TOP COVERLAY
   d. 1.0 MIL ADHESIVE
   e. 1.2 MIL FINISHED RA COPPER - TOP COPPER
   f. 0.5 MIL ADHESIVE
   g. 1.0 MIL POLYIMIDE - BASE
   h. 0.5 MIL ADHESIVE
   i. 1.2 MIL FINISHED RA COPPER - BOTTOM COPPER
   j. 1.0 MIL ADHESIVE
   k. 1.0 MIL POLYIMIDE - BOTTOM COVERLAY
8. BUILD TO IPC 6013 CLASS 2
9. POST TEST: USE A MULTIMETER WITH DIODE TEST MODE TO VERIFY PINS ILLUMINATE INDICATED COLOR.
10. RoHS COMPLIANCE PER 5240305GSP DOCUMENTATION LEVEL 3 OR HIGHER

46-274914	PART AND CONFORMANCE MARKING STANDARD PRACTICE
2269126GSP	CABLE AND HARNESS GENERAL ASSEMBLY PRACTICES
5342004GSP	SPEC FLEXIBLE CIRCUITS FABRICATION
5240305GSP	GE HEALTHCARE RoHS REQUIREMENTS
1010-0196-000	SPEC MANUFACTURING PRACTICES

Rev	(Zone)	Revisions	Change No
5		INITIAL RELEASE	04-MAY-2023 SAI

DRAWN BY: SAI
DATE: 04-NOV-2019
SCALE: 2/1
SHEET: 1 OF 1
DWG SIZE: C
THIRD ANGLE PJTN
INSP. KEY: ITEMS INDICATED TO BE PART OF SUPPLIER INSPECTION PLAN.

Datex-Ohmeda, Inc.
A GE Healthcare Business

Copyright © 2019 by General Electric Company

TITLE: ALARM BAR ASSEMBLY
MATERIAL: ---
PART NUMBER: 5827049

DO NOT SCALE DRAWING
METRIC DRAWING
DIMENSIONS ARE MILLIMETERS UNLESS OTHERWISE SPECIFIED
TOLERANCES AND FINISHES UNLESS OTHERWISE SPECIFIED:
1) X ±0.5
X.X ±0.3
X.XX ±0.15
X° ±1°
2) MACH μm 3.2√

THIS DOCUMENT CONTAINS CONFIDENTIAL OR PROPRIETARY INFORMATION OF GENERAL ELECTRIC COMPANY OR ITS AFFILIATES. NEITHER THE DOCUMENT NOR THE INFORMATION THEREIN IS TO BE REPRODUCED, DISTRIBUTED, USED OR DISCLOSED, EITHER IN WHOLE OR PART, EXCEPT AS SPECIFICALLY AUTHORIZED IN WRITING BY GENERAL ELECTRIC COMPANY AND MUST BE RETURNED UPON REQUEST.

NOT RELEASED FOR PRODUCTION
by Scott Inman 12-MAY-2023 02:59:46 PM CDT

DRAWING NUMBER 5827049DW

瑞华高科技电子工业园（厦门）有限公司

Suiwa High Technology Electronic Industries (Xiamen)Co.,Ltd.

剥离强度测试报告（Peeling Strength Test Report）

No.:QA23080704

料号(P/N)：	DS18001SB1	试验日期(Date of Testing)：	2023-08-07	周期(D/C)：	/
送检人(Sent by)：	陈宗征	送检工序(Test process)：	QA	数量(Quantity)	3PCS

测试环境条件(Measuring environment):Temperature (℃). 23; Humidity (%RH)57

测试工具(Test tools)：	测试条件(Test Condition)
拉力测试机(peeling strength test machine)	1.依据(According to) IPC-TM-650. 2.4.9 2.速度(speed): 50.8mm/min
试验用材质(test material)：PI	判断标准(acceptive level)： ≥1.0 kgf/cm

序号(NO.)	量测值（Measurement）(kgf/cm)	判定(Result)	其它(Other)
1	1.27	☑ACC ☐REJ ☐OTHER	
2	1.29	☑ACC ☐REJ ☐OTHER	
3	1.20	☑ACC ☐REJ ☐OTHER	

测试结果(Result): ☑ACC ☐REJ ☐OTHER

备注(remark)：

保存期限：3 年　　表单编号(Sheet NO.): FM060200-005 REV1.5

核准(Checked by):秦晓冬　　审核(Auditing)：凌向前　　实验员(tested by):杨艺

瑞华高科技电子工业园（厦门）有限公司

Suiwa High Technology Electronic Industries (Xiamen)Co.,Ltd.

焊锡性测试报告 (Solderability Test Report)

No.：QA23080704

料号(P/N)：	DS18001SB1	试验日期(Date of Testing)：	2023-08-07	周期(D/C)：	/
送 检 人 (Sent by)：	陈宗征	送检工序(Test process)：	QA	数量(Quantity)	3PCS

测试环境条件(Measuring environment)： Temperature (℃). 23 ; Humidity (%RH) 57

测试工具(Test tools)：	测试条件(Test Condition)
1.烤箱(Oven) 2.锡炉(Stove of solder) 3.助焊剂 LANCO26F Flux（LANCO26F）	1.依据 IPC J-STD-003. 2.温度(Temp)：245±5℃ 3.时间(Time)：3.0+1/-0Sec

允收标准(acceptive level)：

1.表面焊锡面积≧95% (The area of solder mask on the SMT’s surface should be more than 95 and equivalent to 95%)
2.不能有覆膜层离情形（No delamination of coverlay）

序号 (NO.)	焊点数 (NUM)	不良数 (DOM)	不良项目 (PCB&FPC-Defect Item)								判定 (Result)
			空焊 (Missing solder mask	针孔 (Pin hole)	锡桥 (Solder Bridge)	锡凹 (Solder concave)	拉锡 (Wetting)	吹孔 (Blow hole)	锡珠 (Solder ball	层离 (Delamination)	
1	10	0	0	0	0	0	0	0	0	0	☑ACC ☐REJ ☐OTHER
2	10	0	0	0	0	0	0	0	0	0	☑ACC ☐REJ ☐OTHER
3	10	0	0	0	0	0	0	0	0	0	☑ACC ☐REJ ☐OTHER

测试结果(Result)： ☑ACC ☐REJ ☐OTHER

备注(remark)：

保存期限：3 年 表单编号(Sheet NO.)：FM060200-005 REV1.5

核准(Checked by)：秦晓冬 审核(Auditing)：凌向前 实验员(tested by)：杨艺

瑞华高科技电子工业园（厦门）有限公司

Suiwa High Technology Electronic Industries (Xiamen)Co.,Ltd.

热应力测试报告 (Thermal Stress Test Report)

No.:QA23080704

料号(P/N):	DS18001SB1	试验日期(Date of Testing):	2023-08-07	周期(D/C):	/
送检人(Sent by):	陈宗征	送检工序(Test process):	QA	数量(Quantity)	3PCS

测试环境条件(Measuring environment):Temperature (℃). 23; Humidity (%RH)57

测试工具(Test tools):	测试条件(Test Condition)
1. 烤箱(Oven) 2. 锡炉(Tin)	1. 依据 IPC-TM-650. 2.6.8 2. 温度(Temp):288±5℃ 3. 时间(Time):10+1/-0Sec

外观检查、和微切片之允收标准(Acceptive Level for Description&Microsectioned Coupons):

序号 (NO.)	外观检查之允收标准(Acceptive Level for Description)	判定 (Result)
1	目视无层离爆板现象 (No delamination & crack on the FPC through the visual inspection)	☑ACC ☐REJ ☐OTHER
2		☑ACC ☐REJ ☐OTHER
3		☑ACC ☐REJ ☐OTHER

测试结果(Result): ☑ACC ☐REJ ☐OTHER

备注(remark):

保存期限：3 年

表单编号(Sheet NO.): FM060200-005 REV1.5

核准(Checked by):秦晓冬 审核(Auditing): 凌向前 实验员(tested by):杨艺

1. Product introduction:

Flexible printed circuits (hereinafter as FPC) is made by flexible material which can reduce weight & space. It has many advantages like 3D assembly, fit into dynamic application and etc. The main base material of FPC is polyimide (Kapton/PI) with heat-resistant and high flexibility. The Polyimide is a hygroscopic (water absorbent) material, so we suggest to pre-bake the board before SMT assembly to prevent delamination under steep temperature gradient.

2. Proper storage conditions (Preferably keep in sealed packing or vacuum packing):

* Temperature，23±3℃ * Humidity，35%-70%
* Do not store under acidic or alkaline conditions.
* Shelf life, 12 months（If unpacked, please complete the assembly within one month）

3. Pre-baking process before assembly to prevent delamination.

Placing FPC boards on multi-layered, air ventilated fixture with air gap among each of them, then put into an oven.

1) When FPC thickness≤0.2mm (without stiffener/PSA), FPC should be pre-baked within 2-4 hours at 120℃ before assembly process.
2) When FPC thickness≥0.2mm (without stiffener/PSA), FPC should be pre-baked within 4-8hours at 150℃ before assembly process.
3) When FPC has stiffener with thermal adhesive, FPC should be pre-baked within 2-6 hours at 150℃ before assembly process.
4) When FPC has stiffener with PSA (Pressure Sensitive Adhesive), FPC should be pre-baked within 3-4 hours at 120℃ before assembly.
5) FPC must be assembled within 60 minutes after pre-baking, otherwise it should be stored in 60±10℃, humidity ≤15% in oven to prevent it from absorbing air moisture again.
6) If FPC is exposed to air >60 minutes after pre-baking without storing into oven, it MUST be pre-baked again. Repeated pre-baking will jeopardize the reliability of the FPC.
7) If the SMT assembly is conducted after 6 months of manufactured date, we propose to top up 50% additional pre-baking duration.

*Disclaimer:

Above are the pre-baking suggestions. The bake out time will vary depending on the FPC size, track density, number of layer, seasonal factor affecting humidity, baking fixture, oven air ventilation etc. For each new assembly the time should be set at midway between minimum and maximum. If no problem is encountered the time may be reduced for the next batch. This process should continue until an acceptable bake out time is achieved. The pre-baking process control parameter should be fixed at where assembly performed, it is the assembler company's responsibility to test prove a suitable pre-baking criteria to prevent delamination.

4. Attentions.

1). FPC is vulnerable and easily torn and wrinkled, please handle them carefully.
2). Please wear finger glove/glove before touching the FPC，and avoid gold plating surfaces or solder pads.
3). For long FPC, must stretch straightly and hold it with both hands.

内容仅经许可后才能传递、使用或透露。瑞华保留所有权利。
The contents may only be passed on used or made known with our express permission. ©SUIWA-All rights reserved.