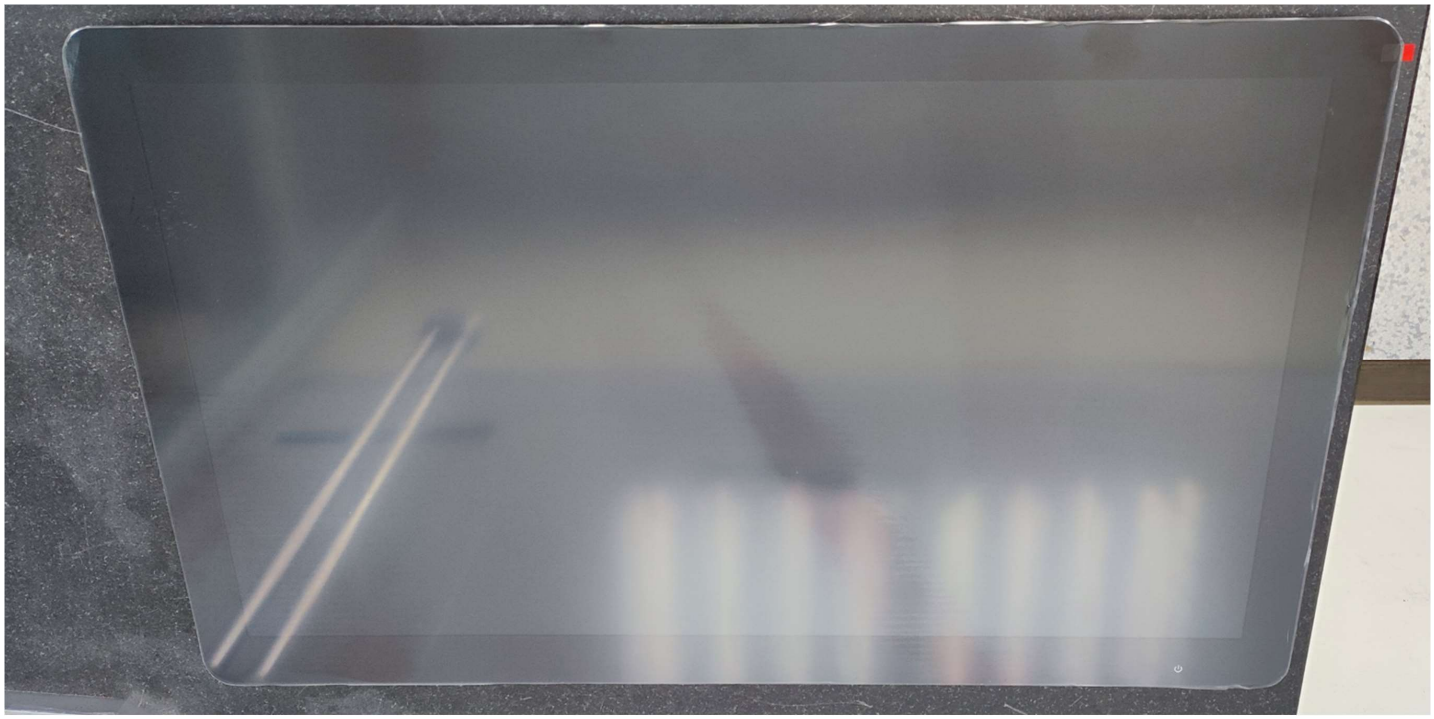





設計驗證
工程課
2023.08.15
發行

AUO Display+

AUO Display Plus Corporation

Engineering Change Notice

Document No:	GDALL-ALL-ALL-3041
Product Type:	ALL
Model Name:	ALL
Issued Date:	2022/09/30

Requested by

Signature	吳妤婷 莊馥綺
Date	2022/10/03
Name	吳妤婷 莊馥綺
Title	行銷三部

1. Purpose

AUO is expanding its business and in an effort to clearly convey its expansion as a company, and AUO will be changing their company name from “AU Optronics Corp.” to “AUO Corporation”. Please note this change shall not impact our ongoing cooperation and any agreements we have with your company. According to this change, product label need to be updated.

2. Changes

According to this change, product label need to be updated.
Change item:
(1) Shipping / Carton / Pallet label
(2) Logo on the top of Carton

Figure :

3. Desired Implementation Method & Date

2022/11/04 ; RUNNING CHANGE ;

4. Attachment

AUO Confidential

Customer (ACMEPOINT) Feedback

Disposition
【 】Agree
【 】Disagree,Comment:

Note: Please kindly reply to ADP within 14 calendar days upon receipt. This ECR will be regarded as "Agree" if ADP does not receive feedback within 14 calendar days.

Agreed by:

Signature	_____
Date	_____
Name	_____
Title	_____

開發部
2023.06.27
發行
宏鑫科技開發股份有限公司

() Preliminary Specifications
(v) Final Specifications

Module	27.0 Inch Color TFT-LCD
Model Name	G270ZAN01.1 (101) 3TFTLCD27C2(T0175)

Customer	Date	Approved by	Date
		Jason.CL.Pan	2019. 12. 2
Checked & Approved by	**Date**	**Prepared by**	**Date**
	開發部 2023. 07. 27 發行	Daniel Chang	2019. 12. 2
Customer's sign back page		General Display Business Division / AU Optronics corporation	

AUO-General

AUO Confidential
For DIVA Internal Use Only
20200325 18:06:30

For DIVA internal use only - provided by darrentsai on 2020/03/25

Contents

1. Operating Precautions 4
2. General Description 5
2.1 Display Characteristics 5
2.2 Optical Characteristics 6
3. Functional Block Diagram 9
4. Absolute Maximum Ratings 10
4.1 Absolute Ratings of TFT LCD Module 10
4.2 Absolute Ratings of Environment 10
5. Electrical Characteristics 11
5.1 TFT LCD Module 11
5.2 Backlight Unit 12
6. Signal Characteristic 14
6.1 Pixel Format Image 14
6.2 Scanning Direction 14
6.3 Signal Description 15
6.4 The Input Data Format 17
6.5 Interface Timing 20
6.6 Power ON/OFF Sequence 24
7. Reliability Test Criteria 24
8. Mechanical Characteristics 26
8.1 LCM Outline Dimension 26
9. Label and Packaging 28
9.1 Shipping Label (on the rear side of TFT-LCD display) 28
9.2 Carton Package 29
10 Safety 30
10.1 Sharp Edge Requirements 30
10.2 Materials 30
10.3 Capacitors 30
10.4 National Test Lab Requirement 30

AUO Confidential
For DIVA Internal Use Only
20200325 18:06:30

For DIVA internal use only - provided by darrentsai on 2020/03/25

Record of Revision

Version	Date (yyyy/m/d)	Page	Old description	New Description
0.1	2019/05/17	All	Preliminary spec	
0.2	2019/08/30	6	2.2 Optical Characteristics Color / Chromaticity Coordinates (CIE 1931) Red x: TBD Red y: TBD Green x: TBD Green y: TBD Blue x: TBD Blue y: TBD White x: 0.283 0.313 0.343 White y: 0.299 0.329 0.359	2.2 Optical Characteristics Color / Chromaticity Coordinates (CIE 1931) Red x: 0.671 0.674 0.677 Red y: 0.306 0.309 0.312 Green x: 0.26 0.263 0.266 Green y: 0.651 0.654 0.657 Blue x: 0.148 0.151 0.154 Blue y: 0.049 0.052 0.055 White x: 0.283 0.313 0.343 White y: 0.299 0.329 0.359
1.0	2019/10/22		Preliminary Specifications	Final Specifications
1.1	2019/12/02	6	2.2 Optical Characteristics (Typo.) Color / Chromaticity Coordinates (CIE 1931) Red x: 0.671 0.674 0.677 Red y: 0.306 0.309 0.312 Green x: 0.26 0.263 0.266 Green y: 0.651 0.654 0.657 Blue x: 0.148 0.151 0.154 Blue y: 0.049 0.052 0.055 White x: 0.283 0.313 0.343 White y: 0.299 0.329 0.359	2.2 Optical Characteristics Color / Chromaticity Coordinates (CIE 1931) Red x: 0.644 0.674 0.704 Red y: 0.279 0.309 0.339 Green x: 0.233 0.263 0.293 Green y: 0.624 0.654 0.684 Blue x: 0.121 0.151 0.181 Blue y: 0.022 0.052 0.082 White x: 0.283 0.313 0.343 White y: 0.299 0.329 0.359

AUO Confidential
For DIVA Internal Use Only
20200325 18:06:30

For DIVA internal use only - provided by darrentsai on 2020/03/25

1. Operating Precautions

1) Since front polarizer is easily damaged, please be cautious and not to scratch it.
2) Be sure to turn off power supply when inserting or disconnecting from input connector.
3) Wipe off water drop immediately. Long contact with water may cause discoloration or spots.
4) When the panel surface is soiled, wipe it with absorbent cotton or soft cloth.
5) Since the panel is made of glass, it may be broken or cracked if dropped or bumped on hard surface.
6) To avoid ESD (Electro Static Discharde) damage, be sure to ground yourself before handling TFT-LCD Module.
7) Do not open nor modify the module assembly.
8) Do not press the reflector sheet at the back of the module to any direction.
9) In case if a module has to be put back into the packing container slot after it was taken out from the container, do not press the center of the LED light bar edge. Instead, press at the far ends of the LED light bar edge softly. Otherwise the TFT Module may be damaged.
10) At the insertion or removal of the Signal Interface Connector, be sure not to rotate nor tilt the Interface Connector of the TFT Module.
11) TFT-LCD Module is not allowed to be twisted & bent even force is added on module in a very short time. Please design your display product well to avoid external force applying to module by end-user directly.
12) Small amount of materials having no flammability grade is used in the LCD module. The LCD module should be supplied by power complied with requirements of Limited Power Source (IEC60950 or UL1950), or be applied exemption.
13) Severe temperature condition may result in different luminance, response time and lamp ignition voltage.
14) Continuous operating TFT-LCD display under low temperature environment may accelerate lamp exhaustion and reduce luminance dramatically.
15) The data on this specification sheet is applicable when LCD module is placed in landscape position.
16) Continuous displaying fixed pattern may induce image sticking. It's recommended to use screen saver or shuffle content periodically if fixed pattern is displayed on the screen.

AUO-General

AUO Confidential
For DIVA Internal Use Only
20200325 18:06:30

For DIVA internal use only - provided by darrentsai on 2020/03/25

2. General Description

This specification applies to the Color Active Matrix Liquid Crystal Display G270ZAN01.1 composed of a TFT-LCD display, a driver and power supply circuit, and a LED backlight system. The screen format is intended to support the UHD (3840(H) x 2160(V)) screen and 1.07B colors.

LED driving board for backlight unit is included. All input signals are 8 lanes V by one interface compatible.

2.1 Display Characteristics

The following items are characteristics summary on the table under 25 °C condition:

Items	Unit	Specifications
Screen Diagonal	[inch]	26.93” (684mm)
Active Area	[mm]	596.16 (H) x 335.34 (V)
Resolution		3840(x3) x 2160
Pixel Pitch	[mm]	0.15525 (per one triad) x 0.15525
Pixel Arrangement		R.G.B. Vertical Stripe
Display Mode		AHVA mode, Normally Black
Nominal Input Voltage VDD	[Volt]	+12 (Typ)
Power Consumption	[Watt]	Total = 62.16W (Typ) (LCD =12.96W, BLU =49.20W)
Weight	[Grams]	3400 (Typ)
Physical Size	[mm]	630.0 (H) x 368.2 (V) x 22.9 (D) (Typ)
Electrical Interface		8-lanes V by one , 10bits RGB data input
Surface Treatment		Anti-Glare treatment
Support Color		1.07B colors (8bit+Hi FRC)
Temperature Range Operating Storage (Non-Operating)	 [°C] [°C]	 0 to +50 -20 to +60
RoHS Compliance		

For DIVA internal use only - provided by darrentsai on 2020/03/25

2.2 Optical Characteristics

The optical characteristics are measured under stable conditions at 25 °C (Room Temperature):

Item	Unit	Conditions		Min.	Typ.	Max.	Note
White Luminance	cd/m^2	I_{LED}=70mA(center point)		640	800	-	1
Uniformity	%	9 points		-	-	20	2,3
Contrast Ratio	--			700	1000	-	4
Response Time	msec	Rising		-	-	-	5
		Falling		-	-	-	
		Rising + Falling		-	16	25	
Viewing Angle	degree	Horizontal CR >= 10	(Right)	75	89	-	6
			(Left)	75	89	-	
		Vertical CR >= 10	(Upper)	70	89	-	
			(Lower)	70	89	-	
Color / Chromaticity Coordinates (CIE 1931)	--	Red x		0.644	0.674	0.704	
		Red y		0.279	0.309	0.339	
		Green x		0.233	0.263	0.293	
		Green y		0.624	0.654	0.684	
		Blue x		0.121	0.151	0.181	
		Blue y		0.022	0.052	0.082	
		White x		0.283	0.313	0.343	
		White y		0.299	0.329	0.359	

Note 1: Measurement method

Equipment Pattern Generator, Power Supply, Digital Voltmeter, Luminance meter (SR_3 or equivalent)

Aperture 1◦ with 50cm viewing distance

Test Point Center

Environment *< 1 lux*

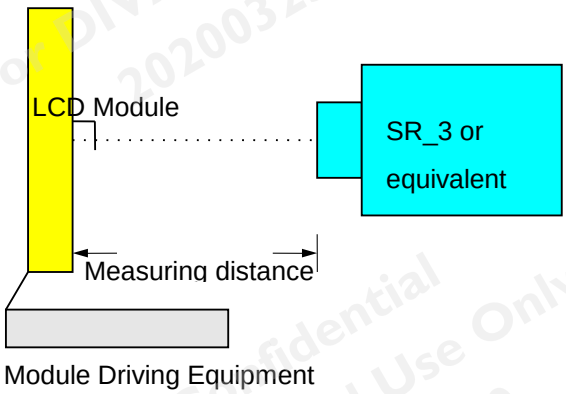

For DIVA internal use only - provided by darrentsai on 2020/03/25

Note 2: Definition of 9 points position

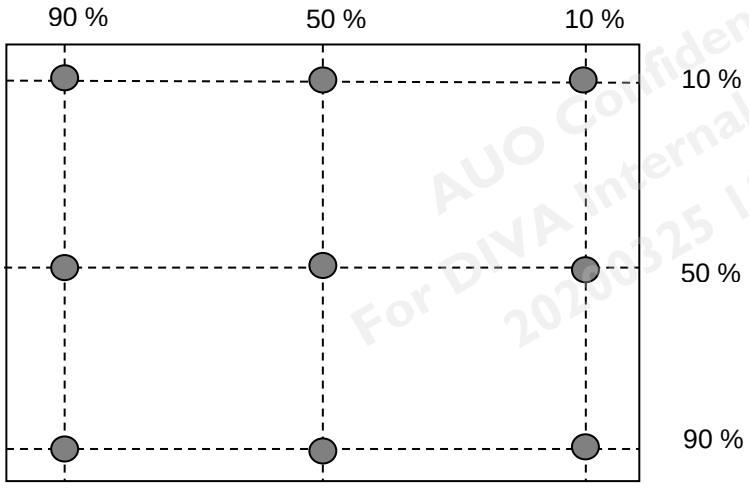

Note 3: Definition of luminance uniformity of 9 points.

$$\delta_{w9} = \frac{\left|B_{max} \text{ or } B_{min} - B_{avg}\right|}{B_{avg}} \times 100\,\%$$

Note 4: Definition of contrast ratio (CR):

$$\text{Contrast ratio (CR)} = \frac{\text{Brightness on the “White” state}}{\text{Brightness on the “Black” state}}$$

Note 5: Definition of response time:

The output signals of photo detector are measured when the input signals are changed from “White” to “Black” (falling time) and from “Black” to “White” (rising time), respectively. The response time interval is between 10% and 90% of amplitudes. Please refer to the figure as below.

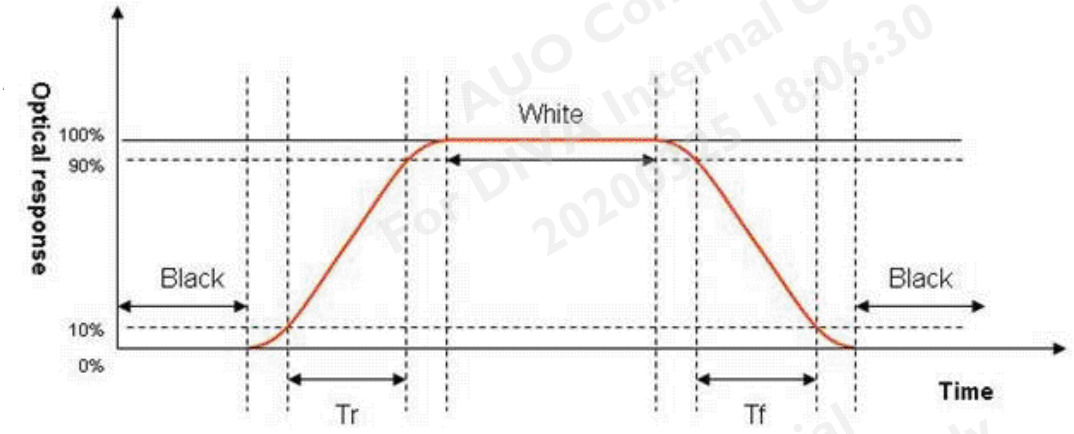

Note 6: Definition of viewing angle

Viewing angle is the measurement of contrast ratio ≧10, at the screen center, over a 180° horizontal and 180° vertical range (off-normal viewing angles). The 180° viewing angle range is broken down as below: 90° (θ) horizontal left and right, and 90° (Φ) vertical high (up) and low (down). The measurement direction is typically

For DIVA internal use only - provided by darrentsai on 2020/03/25

perpendicular to the display surface with the screen rotated to its center to develop the desired measurement viewing angle.

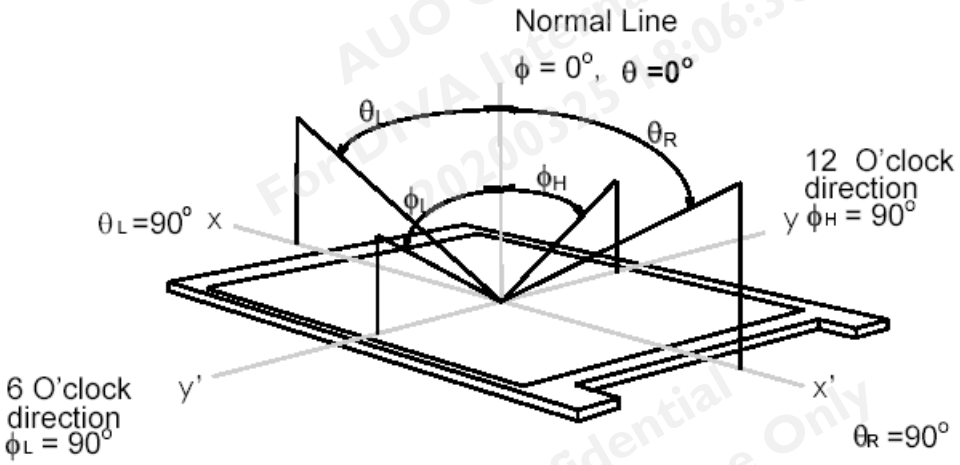

AUO Confidential
For DIVA Internal Use Only
20200325 18:06:30

For DIVA internal use only - provided by darrentsai on 2020/03/25

3. Functional Block Diagram

The following diagram shows the functional block of the 27.0 inch color TFT/LCD module:

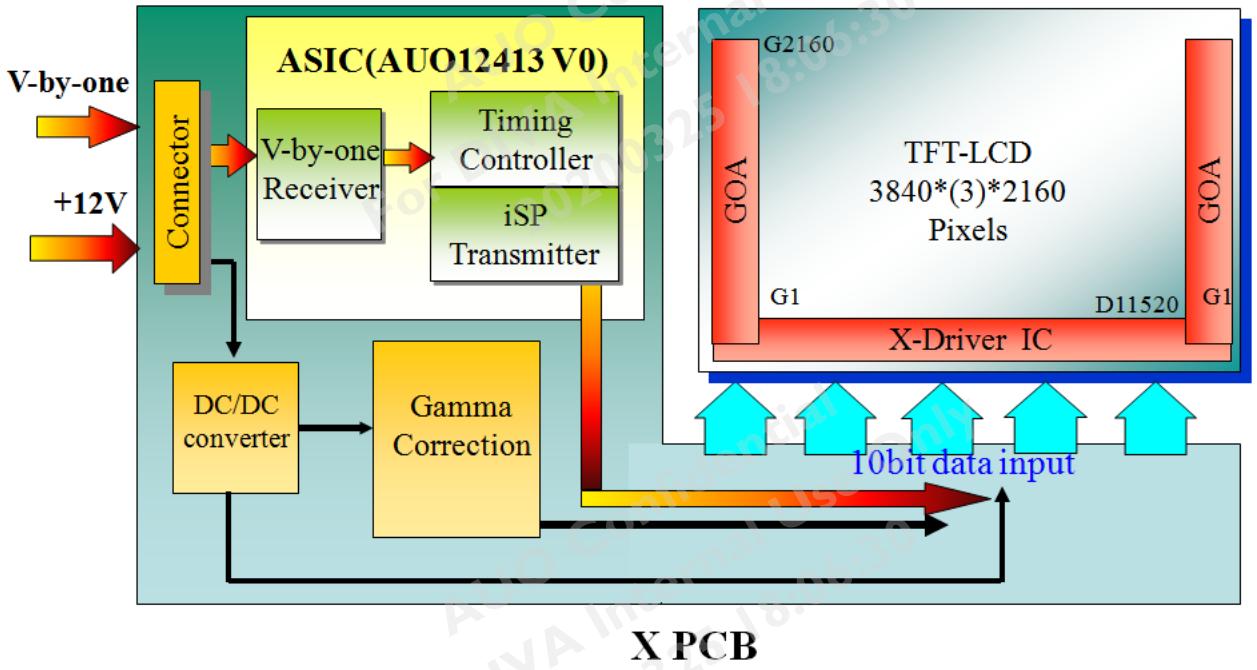

AUO Confidential
For DIVA Internal Use Only
20200325 18:06:30

For DIVA internal use only - provided by darrentsai on 2020/03/25

4. Absolute Maximum Ratings

4.1 Absolute Ratings of TFT LCD Module

Item	Symbol	Min	Max	Unit
Logic/LCD drive Voltage	Vin	GND-0.3	14	[Volt]

4.2 Absolute Ratings of Environment

Item	Symbol	Min	Max	Unit
Operating Temperature	TOP	0	+50	[°C]
Operation Humidity	HOP	5	90	[%RH]
Storage Temperature	TST	-20	+60	[°C]
Storage Humidity	HST	5	90	[%RH]

Note: Maximum Wet-Bulb should be 39 °C and no condensation.

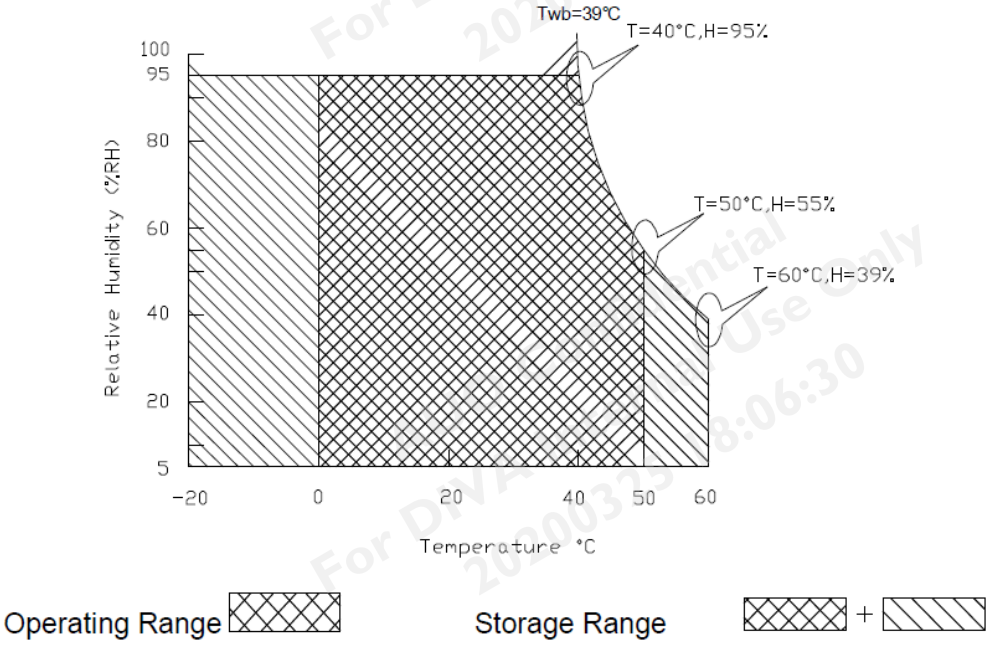

AUO Confidential
For DIVA Internal Use Only
20200325 18:06:30
For DIVA internal use only - provided by darrentsai on 2020/03/25

5. Electrical Characteristics

5.1 TFT LCD Module

5.1.1 Power Specification

Input power specifications are shown as follows;

Symbol	Parameter	Min	Typ	Max	Units	Remark
VDD	Power supply Input voltage	10.8	12.0	13.2	[Volt]	
IDD	Power supply Input Current (RMS)	-	1.08	1.30	[A]	VDD= 12.0V, White pattern, Fv=60Hz
IRush	Inrush Current	-	-	3.0	[A]	***Note 1***
PDD	VDD Power Consumption	-	12.96	15.60	[Watt]	VDD= 12.0V , White pattern, Fv=60Hz
VDDrp	Allowable VDD Ripple Voltage	-	-	VDD* 5%	[mV]	VDD= 12.0V, White pattern, Fv=60Hz

Note 1: Measurement condition:

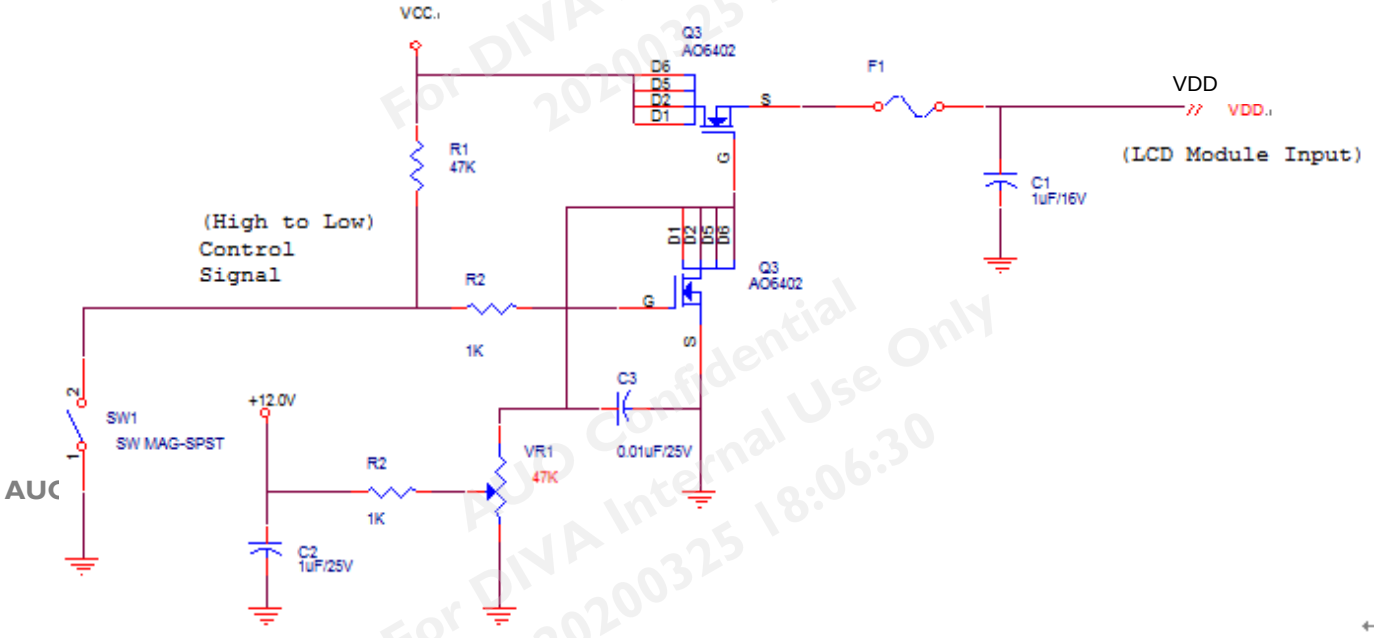

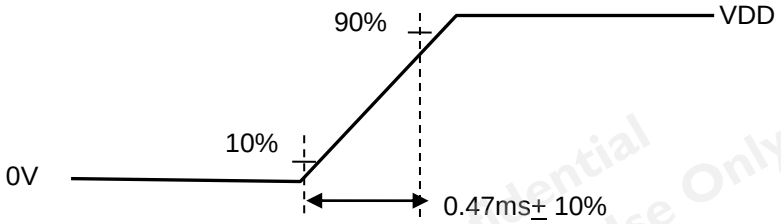

VDD rising time

For DIVA internal use only - provided by darrentsai on 2020/03/25

5.2 Backlight Unit

5.2.1 LED Backlight Unit : Driver Connector

Backlight	manufacturer	JST
	part number	S14B-PH-SM6-K-TB(HF)
Mating	manufacturer	JST
	part number	PHR-14

5.2.2 Signal for LED connector

Pin #	Symbol	Pin Description
1	VDD	Power +24V
2	VDD	Power +24V
3	VDD	Power +24V
4	VDD	Power +24V
5	VDD	Power +24V
6	GND	GND
7	GND	GND
8	GND	GND
9	GND	GND
10	GND	GND
11	NC	Do not connect
12	EN	Enable(0V:disable, 2.5~5V:Enable)
13	Dimming	PWM; duty 10%~ 100%
14	NC	Do not connect

AUO-General
AUO Confidential
For DIVA Internal Use Only
20200325 18:06:30

For DIVA internal use only - provided by darrentsai on 2020/03/25

5.2.3 Backlight input signal characteristics

Following characteristics are measured under a stable condition using an inverter at 25℃ (Room Temperature):

Symbol	Parameter	Min.	Typ.	Max.	Unit	Remark
VDD	Input Voltage	21.6	24.0	26.4	[Volt]	
I_{VDD}	Input Current		2.05	2.46	[A]	100% PWM Duty
P_{VDD}	Power Consumption		49.20	59.04	[Watt]	100% PWM Duty
Irush LED	Inrush Current	-	-	6	[A]	at rising time=470us
F_{PWM}	Dimming Frequency		0.2	20	[kHz]	
	Swing Voltage	3.0	3.3	5.0	V	
	Dimming Duty Cycle	10	-	100	%	
$I_{F\ (one\ channel)}$	LED Forward Current		70		mA	Ta = 25°C
$V_{F\ (one\ channel)}$	LED Forward Voltage	-	-	-	Volt	
		-	33.0	37.4	Volt	I_F =70 mA, Ta = 25°C 10 channel/LB & 2 LB/Panel
		-	3.0	3.4		
$P_{LED\ (One\ LB)}$	LED Power Consumption	-	23.10	26.18	Watt	I_F =70 mA, Ta = 25°C LBx2 : 26.18x2=52.4(Max)
LED Lifetime		50,000			Hrs	I_F=70mA, Ta= 25°C

Note 1: Ta means ambient temperature of TFT-LCD module.

Note 2: VDD, P_{VDD}, P_{VDD} , Irush LED are defined for LED B/L.(100% duty of PWM dimming)

Note 3: I_F, V_F are defined for one channel LED. There are ten LED channels in one light bar. P_{LED} is defined for one light bar. For G270ZAN01.1, there are two light bars in back light unit.

Note 4: If G270ZAN01.1 module is driven by high current or at high ambient temperature & humidity condition. The operating life will be reduced.

Note 5: The LED life-time is estimated data. And is defined when a single LED operated in room temperature, the estimated time to 50% degradation of initial luminous.

Note 6: Only one kind types for adjusting brightness: PWM .

AUO Confidential
For DIVA Internal Use Only
20200325 18:06:30

For DIVA internal use only - provided by darrentsai on 2020/03/25

6 Signal Characteristic

6.1 Pixel Format Image

Following figure shows the relationship between input signal and LCD pixel format.

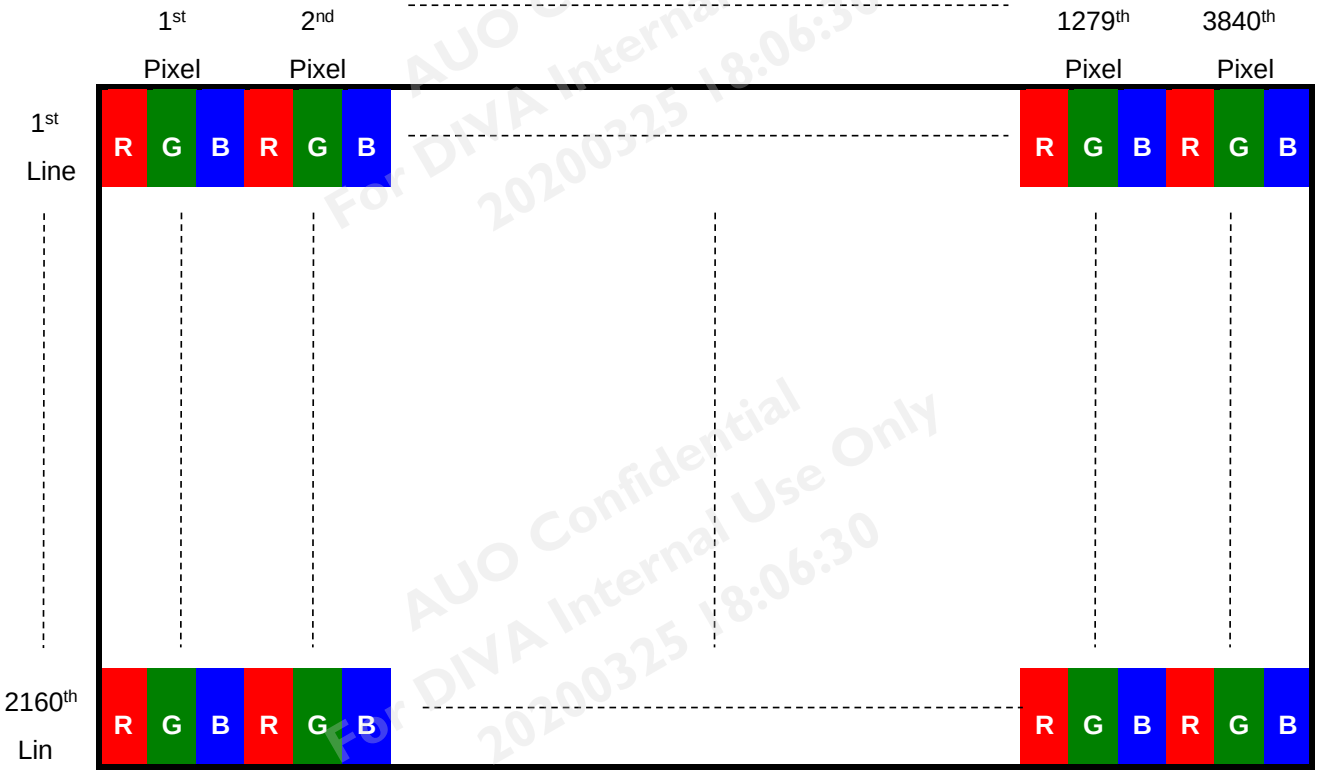

6.2 Scanning Direction

The following figures show the image seen from the front view. The arrow indicates the direction of scan.

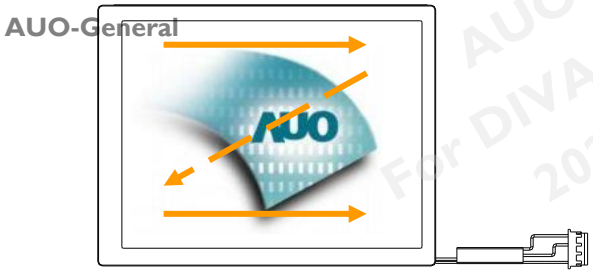

For DIVA internal use only - provided by darrentsai on 2020/03/25

6.3 Signal Description

The module uses a V by one receiver embedded in AUO's ASIC. V by one is a differential signal technology for LCD interface and a high-speed data transfer device.

6.3.1 TFT LCD Module: LCD Connector

Connector Name / Designation	Signal Connector
Manufacturer	JAE
Connector Model Number	FI-RTE51S-HF
Adaptable Plug	FI-RE51HL

Pin	Symbol	Description	Pin	Symbol	Description
1	VDD	Power input (+12V)	26	LOCKN	Vx1 LOCKN
2	VDD	Power input (+12V)	27	GND	Ground
3	VDD	Power input (+12V)	28	RX0N	Vx1 lane0
4	VDD	Power input (+12V)	29	RX0P	Vx1 lane0
5	VDD	Power input (+12V)	30	GND	Ground
6	VDD	Power input (+12V)	31	RX1N	Vx1 lane1
7	VDD	Power input (+12V)	32	RX1P	Vx1 lane1
8	VDD	Power input (+12V)	33	GND	Ground
9	NC	No Connection	34	RX2N	Vx1 lane2
10	GND	Ground	35	RX2P	Vx1 lane2
11	GND	Ground	36	GND	Ground
12	GND	Ground	37	RX3N	Vx1 lane3
13	GND	Ground	38	RX3P	Vx1 lane3
14	GND	Ground	39	GND	Ground
15	NC	No Connection	40	RX4N	Vx1 lane4
16	NC	No Connection	41	RX4P	Vx1 lane4
17	NC	No Connection	42	GND	Ground
18	NC	For internal use, no connection	43	RX5N	Vx1 lane5
19	NC	For internal use, no connection	44	RX5P	Vx1 lane5
20	NC	No Connection	45	GND	Ground
21	NC	No Connection	46	RX6N	Vx1 lane6
22	NC	No Connection	47	RX6P	Vx1 lane6
23	NC	No Connection	48	GND	Ground
24	NC	No Connection	49	RX7N	Vx1 lane7
25	HTPDN	Vx1 HTPDN	50	RX7P	Vx1 lane7
			51	GND	Ground

AUO-General
AUO Confidential For DIVA Internal Use Only 2020/03/25 18:06:30

For DIVA internal use only - provided by darrentsai on 2020/03/25

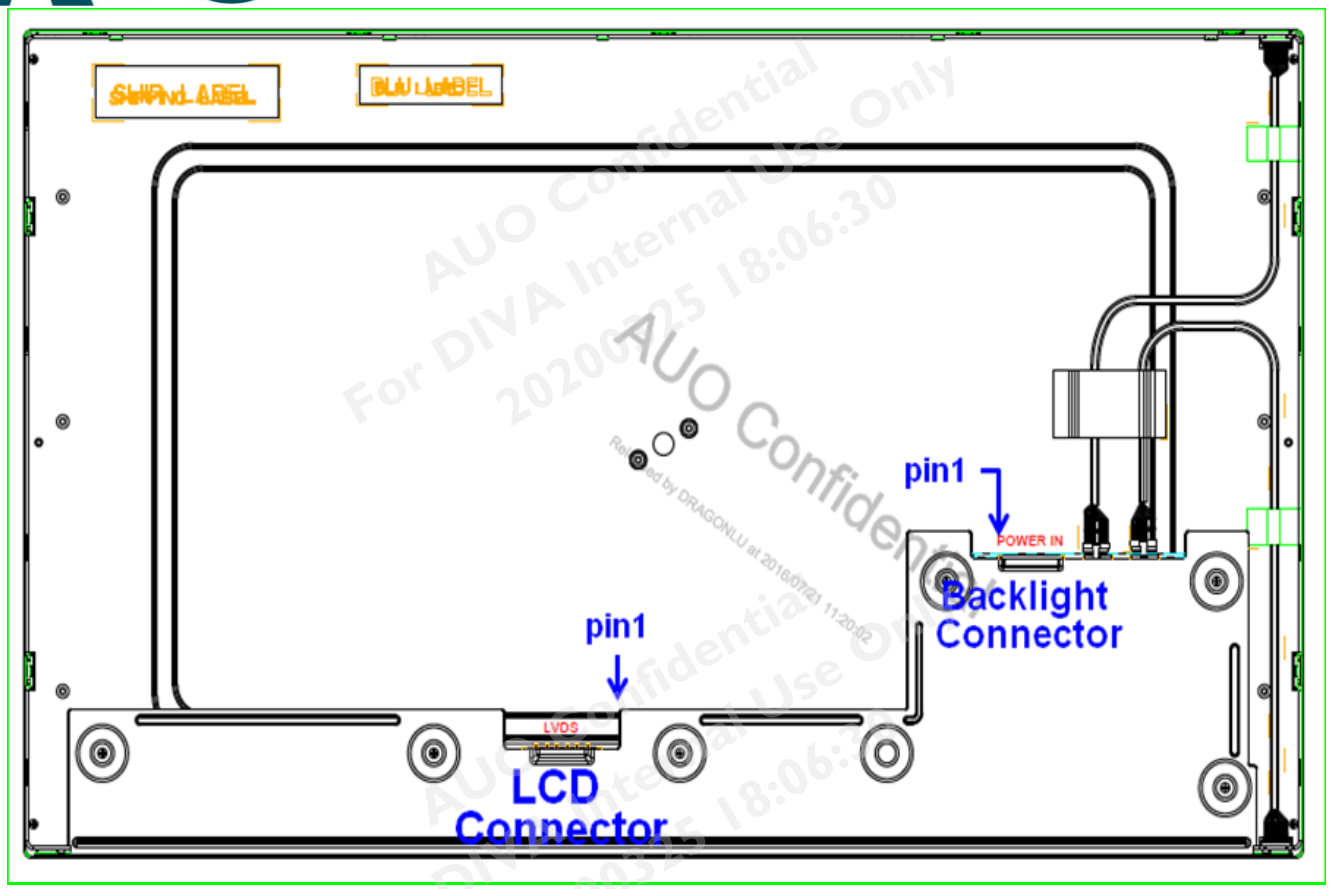

AUO Confidential
For DIVA Internal Use Only
20200325 18:06:30

For DIVA internal use only - provided by darrentsai on 2020/03/25

6.4 The Input Data Format

6.4.1 Color Data Input Reference

The brightness of each primary color is based on the 10bit gray scale data input for the color; the higher the ninary input, the brighter the color. The table below provides a reference for color versus data input.

Color		Input color data																													
		RED										GREEN										BLUE									
		MSB									LSB	MSB									LSB	MSB									LSB
		R9	R8	R7	R6	R5	R4	R3	R2	R1	R0	G9	G8	G7	G6	G5	G4	G3	G2	G1	G0	B9	B8	B7	B6	B5	B4	B3	B2	B1	B0
Basic Color	Black	0	0	0	0	0	0	0	0	0	0	0	0	0	0	0	0	0	0	0	0	0	0	0	0	0	0	0	0	0	0
	Red(0123)	1	1	1	1	1	1	1	1	1	1	0	0	0	0	0	0	0	0	0	0	0	0	0	0	0	0	0	0	0	0
	Green(1023)	0	0	0	0	0	0	0	0	0	0	1	1	1	1	1	1	1	1	1	1	0	0	0	0	0	0	0	0	0	0
	Blue(1023)	0	0	0	0	0	0	0	0	0	0	0	0	0	0	0	0	0	0	0	0	1	1	1	1	1	1	1	1	1	1
	Cyan	0	0	0	0	0	0	0	0	0	0	1	1	1	1	1	1	1	1	1	1	1	1	1	1	1	1	1	1	1	1
	Magenta	1	1	1	1	1	1	1	1	1	1	0	0	0	0	0	0	0	0	0	0	1	1	1	1	1	1	1	1	1	1
	Yellow	1	1	1	1	1	1	1	1	1	1	1	1	1	1	1	1	1	1	1	1	0	0	0	0	0	0	0	0	0	0
	White	1	1	1	1	1	1	1	1	1	1	1	1	1	1	1	1	1	1	1	1	1	1	1	1	1	1	1	1	1	1
R	RED(000)	0	0	0	0	0	0	0	0	0	0	0	0	0	0	0	0	0	0	0	0	0	0	0	0	0	0	0	0	0	0
	RED(001)	0	0	0	0	0	0	0	0	0	1	0	0	0	0	0	0	0	0	0	0	0	0	0	0	0	0	0	0	0	0
	....																														
	RED(1022)	1	1	1	1	1	1	1	1	1	0	0	0	0	0	0	0	0	0	0	0	0	0	0	0	0	0	0	0	0	0
	RED(1023)	1	1	1	1	1	1	1	1	1	1	0	0	0	0	0	0	0	0	0	0	0	0	0	0	0	0	0	0	0	0
G	Green(000)	0	0	0	0	0	0	0	0	0	0	0	0	0	0	0	0	0	0	0	0	0	0	0	0	0	0	0	0	0	0
	Green(001)	0	0	0	0	0	0	0	0	0	0	0	0	0	0	0	0	0	0	1	0	0	0	0	0	0	0	0	0	0	0
	....																														
	Green(1022)	0	0	0	0	0	0	0	0	0	0	1	1	1	1	1	1	1	1	1	0	0	0	0	0	0	0	0	0	0	0
	Green(1023)	0	0	0	0	0	0	0	0	0	0	1	1	1	1	1	1	1	1	1	1	0	0	0	0	0	0	0	0	0	0
B	Blue(000)	0	0	0	0	0	0	0	0	0	0	0	0	0	0	0	0	0	0	0	0	0	0	0	0	0	0	0	0	0	0
	Blue(001)	0	0	0	0	0	0	0	0	0	0	0	0	0	0	0	0	0	0	0	0	0	0	0	0	0	0	0	0	0	1
	....																														
	Blue(1022)	0	0	0	0	0	0	0	0	0	0	0	0	0	0	0	0	0	0	0	0	1	1	1	1	1	1	1	1	1	0
	Blue(1023)	0	0	0	0	0	0	0	0	0	0	0	0	0	0	0	0	0	0	0	0	1	1	1	1	1	1	1	1	1	1

AUO Confidential
For DIVA Internal Use Only
20200325 18:06:30

For DIVA internal use only - provided by darrentsai on 2020/03/25

6.4.2 The Input Data Format

Mode	Packer input & Unpacker output		30bpp RGB /YCbCr444 (10bit)
4byte mode	Byte0	D[0]	R/Cr[2]
		D[1]	R/Cr[3]
		D[2]	R/Cr[4]
		D[3]	R/Cr[5]
		D[4]	R/Cr[6]
		D[5]	R/Cr[7]
		D[6]	R/Cr[8]
		D[7]	R/Cr[9]
	Byte1	D[8]	G/Y[2]
		D[9]	G/Y[3]
		D[10]	G/Y[4]
		D[11]	G/Y[5]
		D[12]	G/Y[6]
		D[13]	G/Y[7]
		D[14]	G/Y[8]
		D[15]	G/Y[9]
	Byte2	D[16]	B/Cb[2]
		D[17]	B/Cb[3]
		D[18]	B/Cb[4]
		D[19]	B/Cb[5]
		D[20]	B/Cb[6]
		D[21]	B/Cb[7]
		D[22]	B/Cb[8]
		D[23]	B/Cb[9]
	Byte3	D[24]	- -
		D[25]	- -
		D[26]	B/Cb[0]
		D[27]	B/Cb[1]
		D[28]	G/Y[0]
		D[29]	G/Y[1]
		D[30]	R/Cr[0]
		D[31]	R/Cr[1]

AUO Confidential
For DIVA Internal Use Only
20200325 18:06:30

For DIVA internal use only - provided by darrentsai on 2020/03/25

6.4.3 Timing Diagram

(Lane1~8 V By One data:1, 2, 3, 4, 1921, 1922, 1923, 1924)

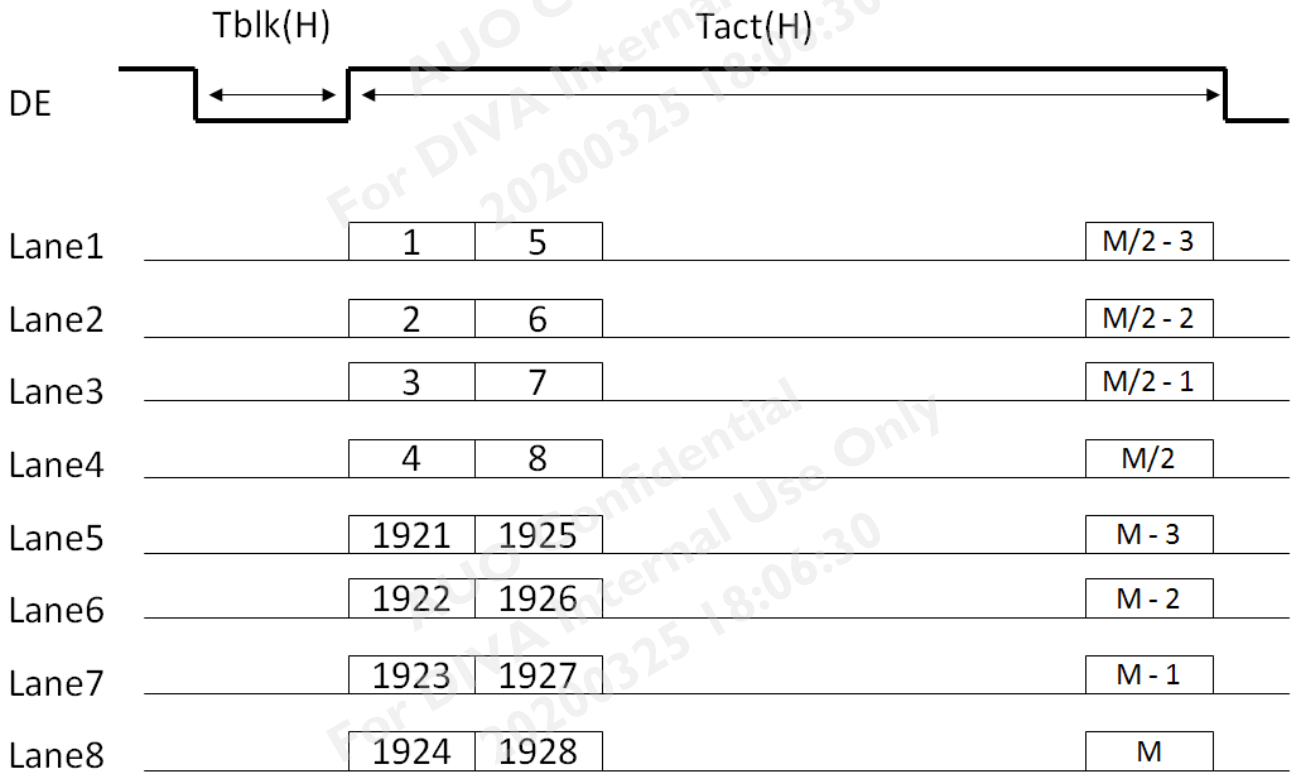

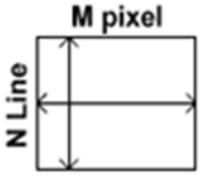

AUO Confidential
For DIVA Internal Use Only
20200325 18:06:30

For DIVA internal use only - provided by darrentsai on 2020/03/25

6.5 Interface Timing

6.5.1 Timing Characteristics

Signal	Item	Symbol	Min	Typ	Max	Unit
Vertical Section	Period	Tv	2200	2250	2660	Th
	Active	Tdisp(v)	-	2160	-	Th
	Blanking	Tbp(v)+Tfp(v)+PWvs	40	90	500	Th
Horizontal Section	Period	Th	530	550	600	Tclk
	Active	Tdisp(h)	-	480	-	Tclk
	Blanking	Tbp(h)+Tfp(h)+PWhs	50	70	120	Tclk
Clock	Period	Tclk	15.15	13	12.98	ns
	Frequency	Freq.	66	74.25	77	MHz
Frame Rate	Frequency	1/Tv	45	60	63	Hz

Note : DE mode only

AUO Confidential
For DIVA Internal Use Only
20200325 18:06:30

For DIVA internal use only - provided by darrentsai on 2020/03/25

6.5.2 V-By-One Spec

Item		Symbol	Min.	Typ.	Max	Unit	Note
V-by-one Interface	VRXINP/N input each bit Period	TRRIP	310	--	379	ps	1
	CDR training pattern time	TLOCK	--	500	--	us	1
	Latency from LOCKN 'HIGH' to clock training pattern	L1	0	--	--	us	1
	Latency from LOCKN 'LOW' to normal 8b10b data	L2	--	--	70	us	1
	CML Differential Input High Threshold	V_{RTH}	+50			mV_{DC}	
	CML Differential Input Low Threshold	V_{RTL}			-50	mV_{DC}	
	CML Common mode Bias Voltage	V_{RCT}	0.8	0.9	1.0	mV_{DC}	
	Intra-pair skew	T_{INTRA}	--	--	0.3	UI	2
	Inter-pair skew	T_{INTER}	--	--	5	UI	3

*Note:*The V-By-One receiver spec is compliant to V-By-One HS standard version1.4.

AUO Confidential
For DIVA Internal Use Only
20200325 18:06:30

For DIVA internal use only - provided by darrentsai on 2020/03/25

V-By-One Signal diagram

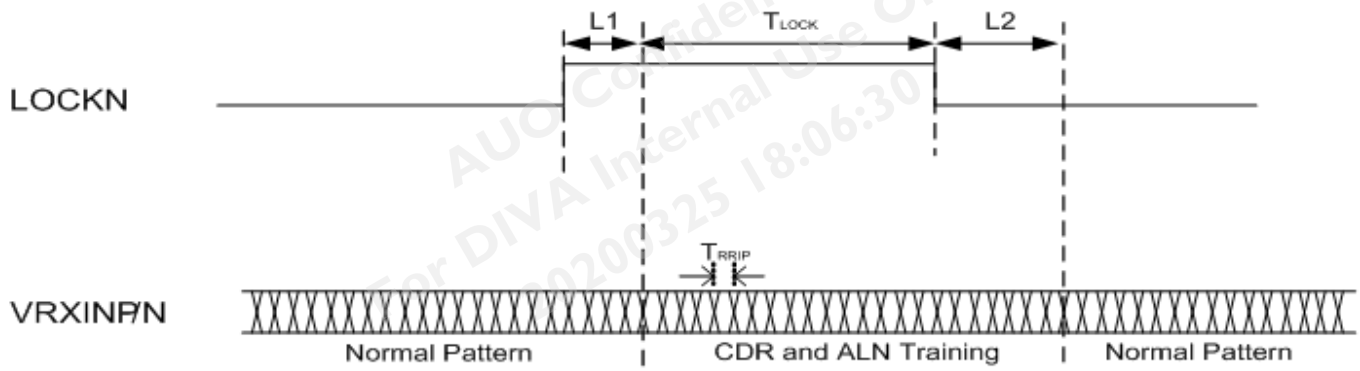

V-By-One intra-pair Skew

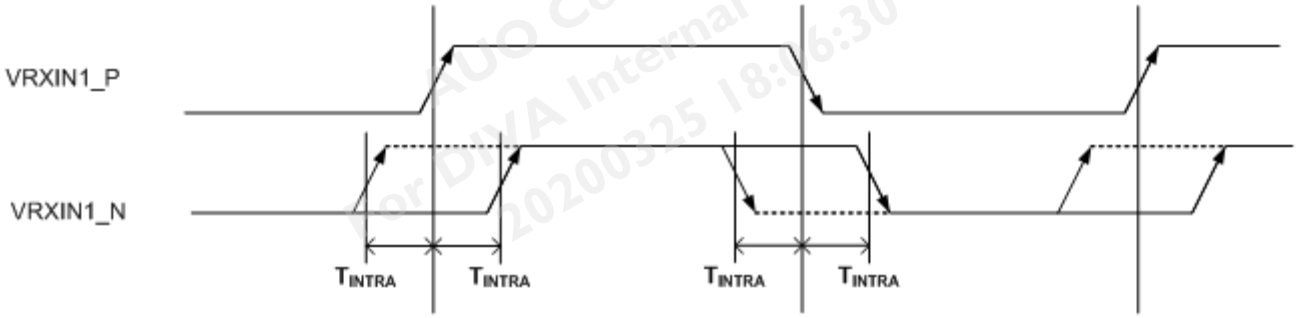

V-By-One intra-pair Skew

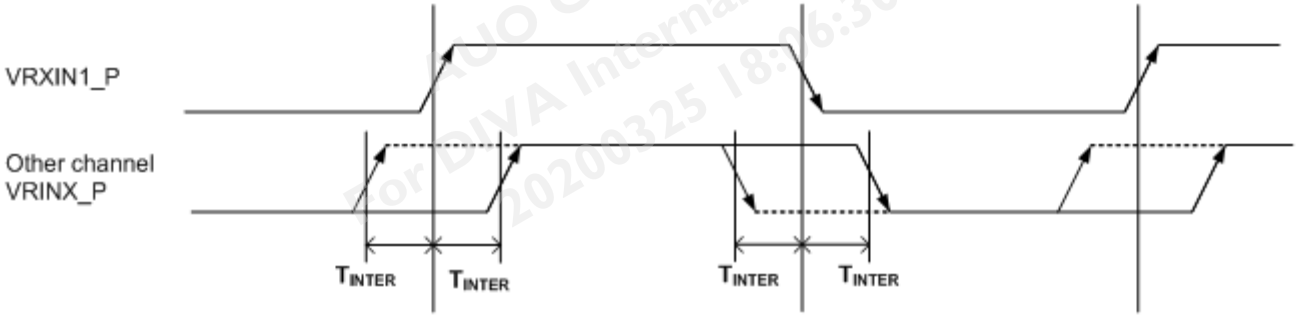

For DIVA internal use only - provided by darrentsai on 2020/03/25

6.5.3 V-By-One Spec

Item		Symbol	Min.	Typ.	Max	Unit	Note
V-by-one Interface	Eye diagram at receiver	A_X	--	0.25	--	UI	1.
		A_Y	--	0	--	mV	
		B_X	--	0.3	--	UI	
		B_Y	--	50	--	mV	
		C_X	--	0.7	--	UI	
		C_Y	--	50	--	mV	
		D_X	--	0.75	--	UI	
		D_Y	--	0	--	mV	
		E_X	--	0.7	--	UI	
		E_Y	--	-50	--	mV	
		F_X	--	0.3	--	UI	
		F_Y	--	-50	--	mV	

Eye Mask

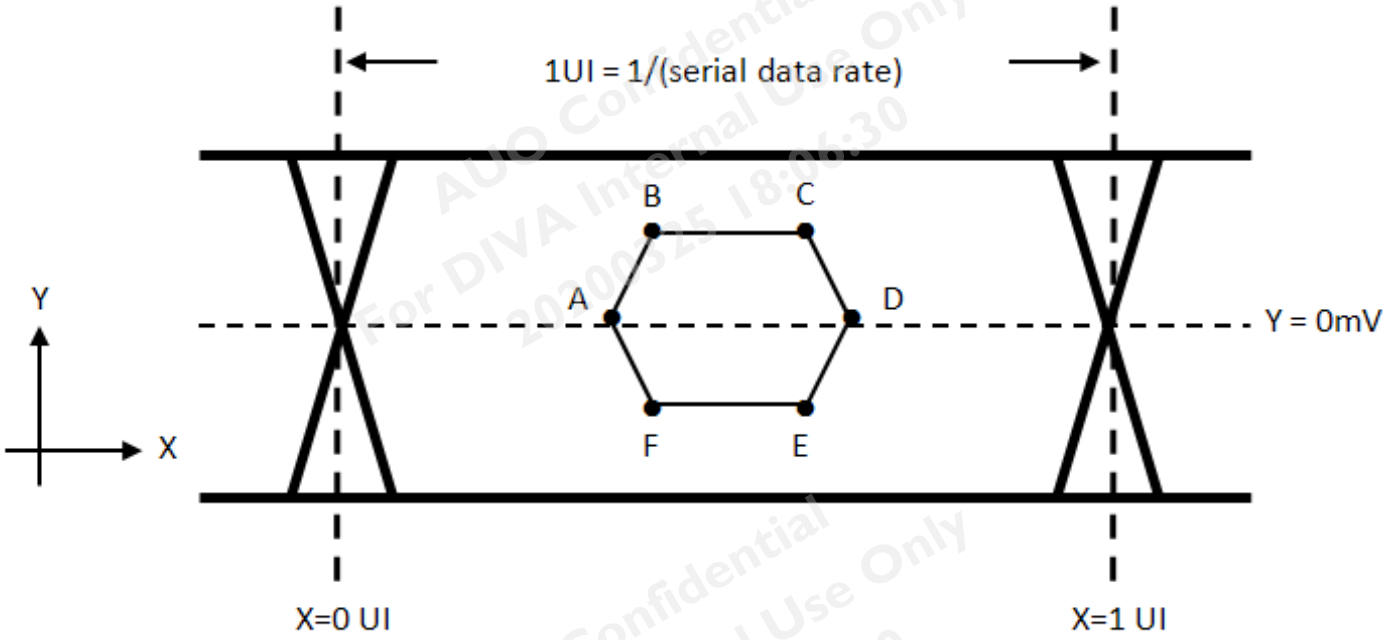

For DIVA internal use only - provided by darrentsai on 2020/03/25

6.6 Power ON/OFF Sequence

VDD power and lamp on/off sequence is as below. Interface signals are also shown in the chart. Signals from any system shall be Hi-Z state or low level when VDD is off.

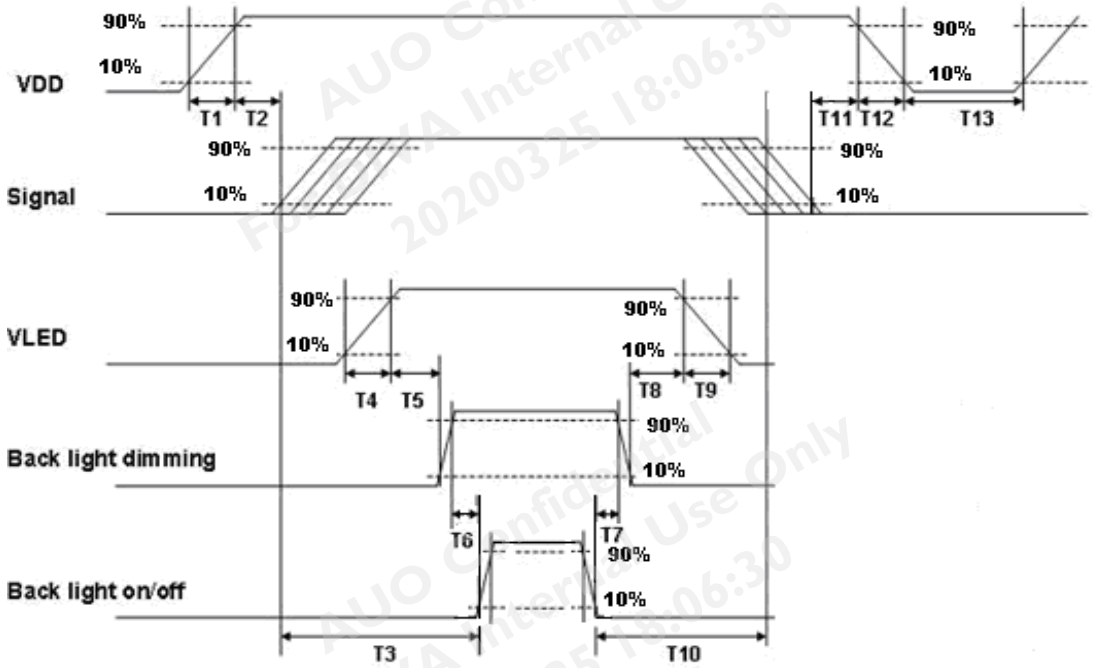

Power Sequence Timing

Power Sequence Timing				
Parameter	Value			Units
	Min.	Typ.	Max.	
T1	0.5	-	10	ms
T2	40	-	- *1	
T3	200	-	--	
T4	0.5	-	10	
T5	10	-	-	
T6	10	-	- *2	
T7	0	-	-	
T8	10	-	-	
T9	-	-	10	
T10	110	-	-	
T11	0	16	50	
T12	0		10	
T13	1000	-	-	

Note 1 (T2)：The maximum timing of VDD rising(90%) to HTPDN falling edge decided by customer system.
Note 2 (T6)：voftage of VDD must decay smoothly after power-off.(customer system decide this value)

For DIVA internal use only - provided by darrentsai on 2020/03/25

7 Reliability Test Criteria

Items	Required Condition	Note
Temperature Humidity Bias (THB)	Ta= 50oC, 80%RH, 300hours	
High Temperature Operation (HTO)	Ta= 50oC, 300hours	
Low Temperature Operation (LTO)	Ta= 0oC, 300hours	
High Temperature Storage (HTS)	Ta= 60oC, 300hours	
Low Temperature Storage (LTS)	Ta= -20oC, 300hours	
Vibration Test (Non-operation)	Acceleration: 1.5 G Wave: Random Frequency: 10 - 200Hz Sweep: 30 Minutes each Axis (X, Y, Z)	
Shock Test (Non-operation)	Acceleration: 50 G Wave: Half-sine Active Time: 20 ms Direction: ±X, ±Y, ±Z (one time for each Axis)	
Drop Test	Height: 60 cm, package test	
Thermal Shock Test (TST)	-20 oC /30min, 60/ oC 30min, 100 cycles	1
On/Off Test	On/10sec, Off/10sec, 30,000 cycles	
ESD (Electrostatic Discharge)	Contact Discharge: ± 8KV, 150pF(330Ω) 1sec, 9 points, 25 times/ point.	2
	Air Discharge: ± 15KV, 150pF(330Ω) 1sec 9 points, 25 times/ point.	
Altitude Test	Operation:10,000 ft Non-Operation:30,000 ft	

Note 1: The TFT-LCD module will not sustain damage after being subjected to 100 cycles of rapid temperature change.

a. A cycle of rapid temperature change consists of varying the temperature from -20oC to 60oC, and back again. Power is not applied during the test.

b. After finish temperature cycling, the unit is placed in normal room ambient for at least 4 hours before power on.

Note 2: According to EN61000-4-2 , ESD class B: Some performance degradation allowed. No data lost. Self-recoverable. No hardware failures.

Note 3:

a. Water condensation is not allowed for each test items.

b. Each test is done by new TFT-LCD module. Don't use the same TFT-LCD module repeatedly for reliability test.

c. The reliability test is performed only to examine the TFT-LCD module capability.

d. To inspect TFT-LCD module after reliability test, please store it at room temperature and room humidity for 24 hours at least in advance.

.

For DIVA internal use only - provided by darrentsai on 2020/03/25

8 Mechanical Characteristics

8.1 LCM Outline Dimension

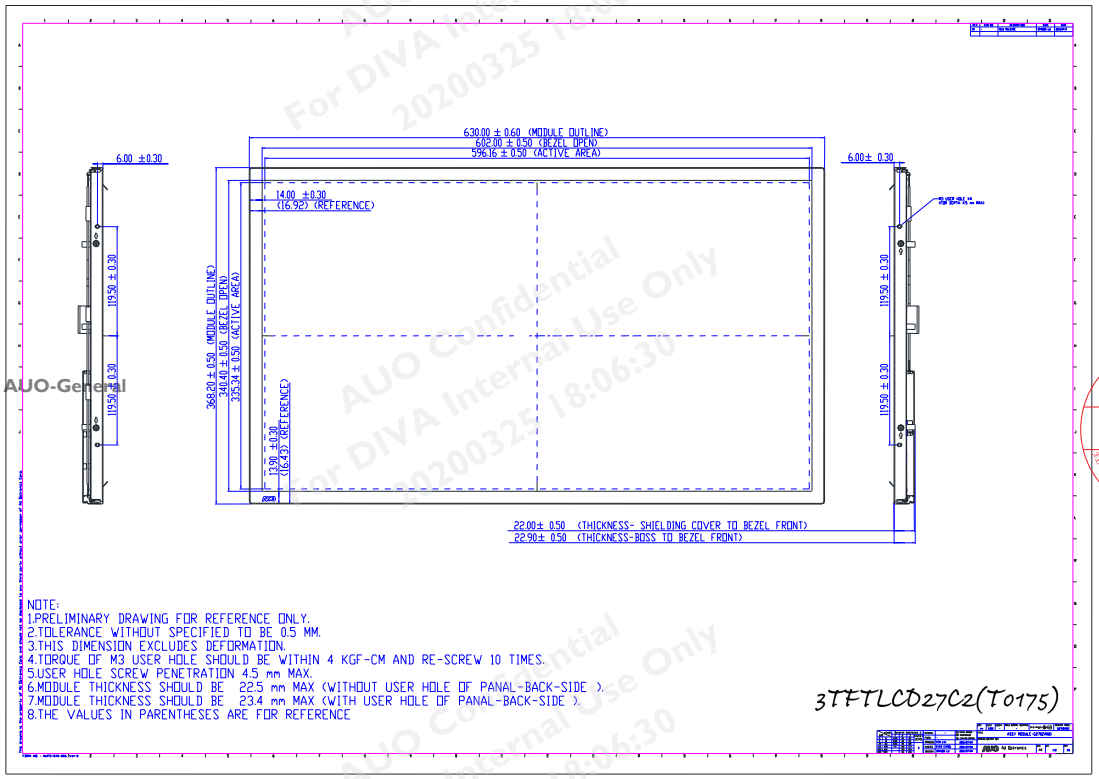

AUO-General
AUO Confidential
For DIVA Internal Use Only
20200325 18:06:30
開發部
2023.07.27
發行

For DIVA internal use only - provided by darrentsai on 2020/03/25

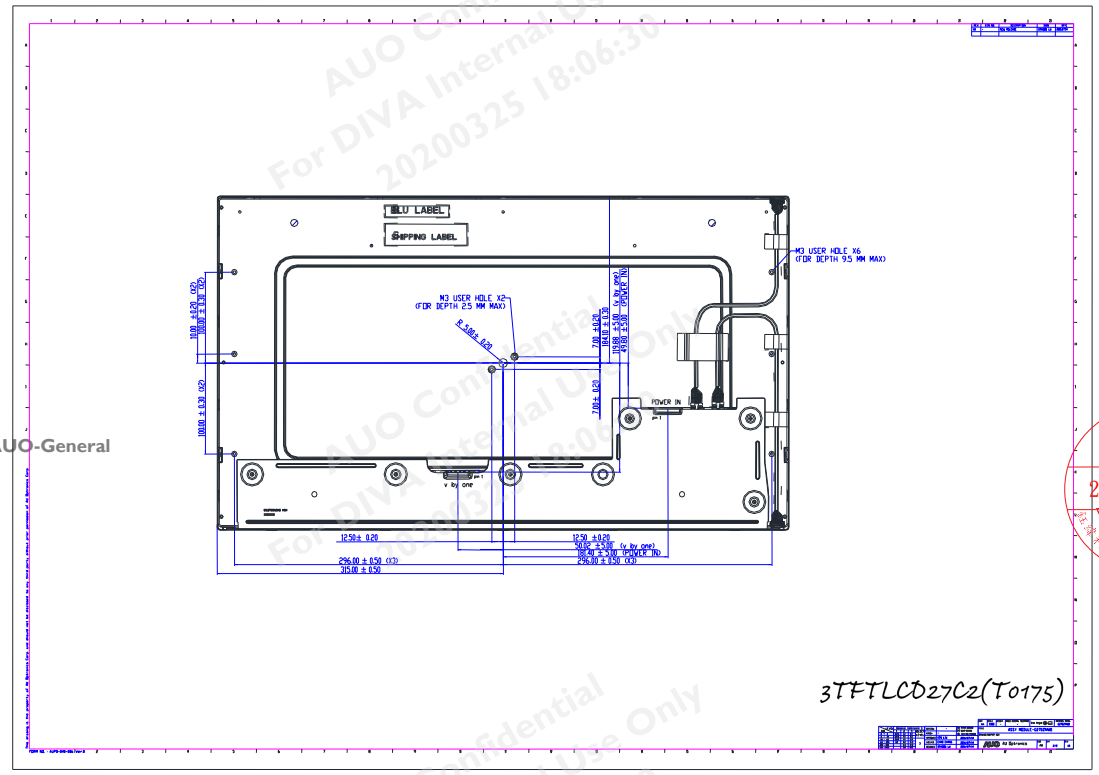

AUO-General
AUO Confidential
For DIVA Internal Use Only
20200325 18:06:30
開發部
2023.07.27
發行

For DIVA internal use only - provided by darrentsai on 2020/03/25

9 Label and Packaging

9.1 Shipping Label (on the rear side of TFT-LCD display)

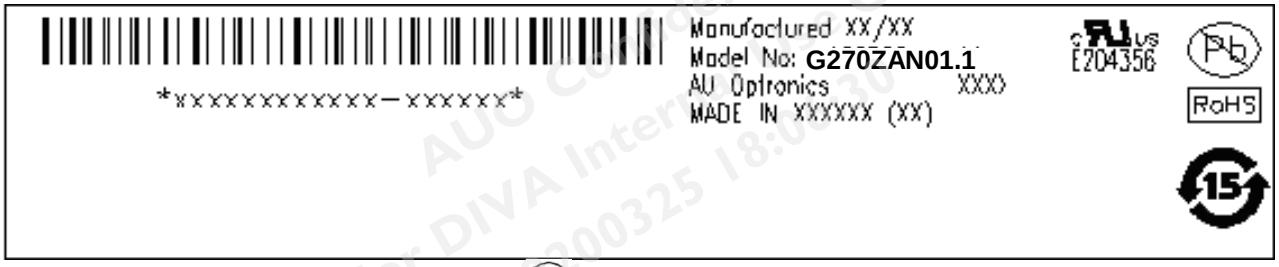

Note 1: For Pb Free products, AUO will add for identification.

Note 2: For RoHS compatible products, AUO will add for identification.

Note 3: For China RoHS compatible products, AUO will add for identification.

Note 4: The Green Mark will be presented only when the green documents have been ready by AUO Internal Green Team.

AUO Confidential
For DIVA Internal Use Only
20200325 18:06:30

For DIVA internal use only - provided by darrentsai on 2020/03/25

9.2 Carton Package

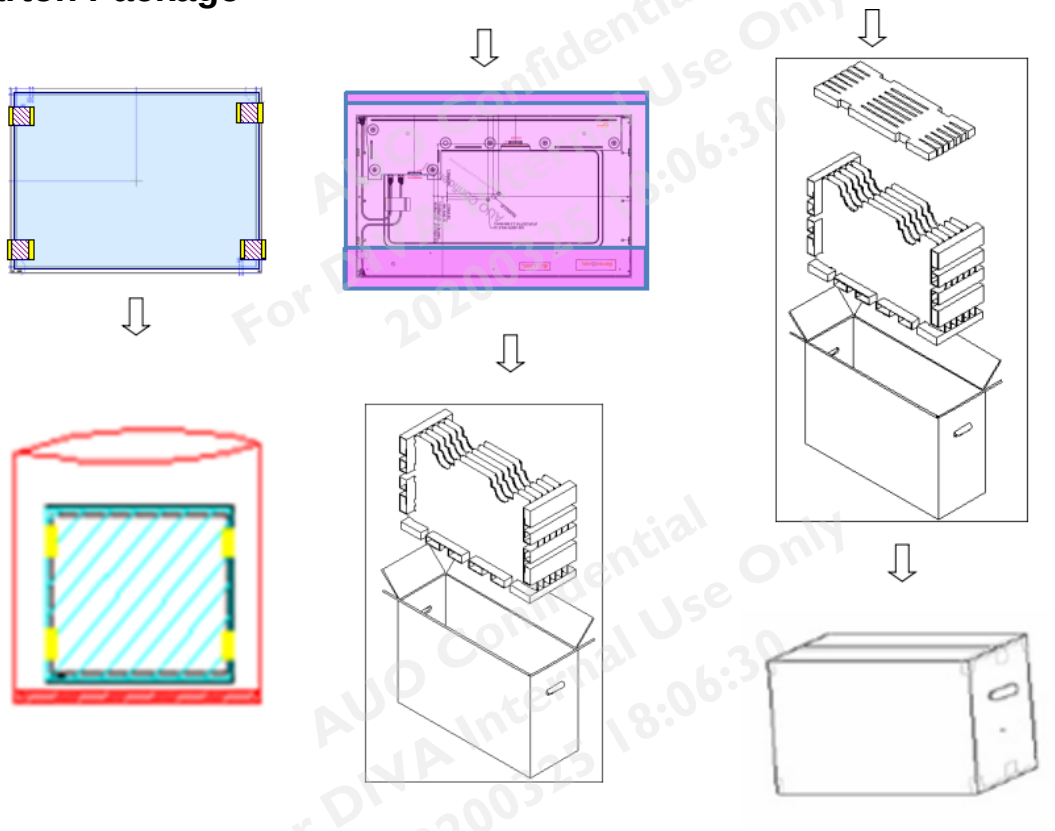

- Max capacity：5 PCS TFT-LCD module per carton
- Max weight: 20 kg per carton
- Outside dimension of carton: 730mm(L) * 270mm(W) * 470mm(H)
- Pallet size： 1200 mm * 800 mm * 132mm
- Box stacked

  Module by air_Max：(1*4) *3 layers，one pallet put 12 boxes，total 60pcs module

  Module by sea_Max：(1*4) *3 layers + (1*4) *1 layers，two pallet put 16 boxes，total 80pcs module

  Module by sea_HQ_Max：(1*4) *3 layers + (1*4) *1 layers，two pallet put 16 boxes，total 80pcs module

AUO-General

AUO Confidential
For DIVA Internal Use Only
20200325 18:06:30

For DIVA internal use only - provided by darrentsai on 2020/03/25

10 Safety

10.1 Sharp Edge Requirements

There will be no sharp edges or comers on the display assembly that could cause injury.

10.2 Materials

10.2.1 Toxicity

There will be no carcinogenic materials used anywhere in the display module. If toxic materials are used, they will be reviewed and approved by the responsible AUO toxicologist.

10.2.2 Flammability

All components including electrical components that do not meet the flammability grade UL94-V1 in the module will complete the flammability rating exception approval process.

The printed circuit board will be made from material rated 94-V1 or better. The actual UL flammability rating will be printed on the printed circuit board.

10.3 Capacitors

If any polarized capacitors are used in the display assembly, provisions will be made to keep them from being inserted backwards.

10.4 National Test Lab Requirement

The display module will satisfy all requirements for compliance to:

UL 60950-1 second edition	U.S.A. Information Technology Equipment

AUO Confidential
For DIVA Internal Use Only
20200325 18:06:30

For DIVA internal use only - provided by darrentsai on 2020/03/25