REV.	DATE	DESCRIPTION	BY	APVD
FP2	2023-02-08	FP2 RELEASE	Lalsie	
IP1	2023-08-23	IP1 RELEASE, USB HUB MODIFY	Laslie	

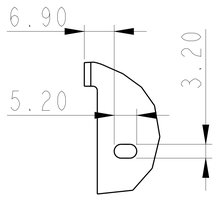

DETAIL D
SCALE 2/1

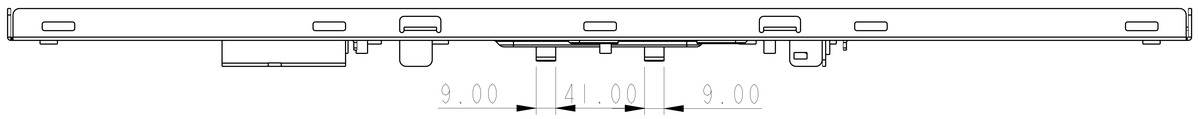

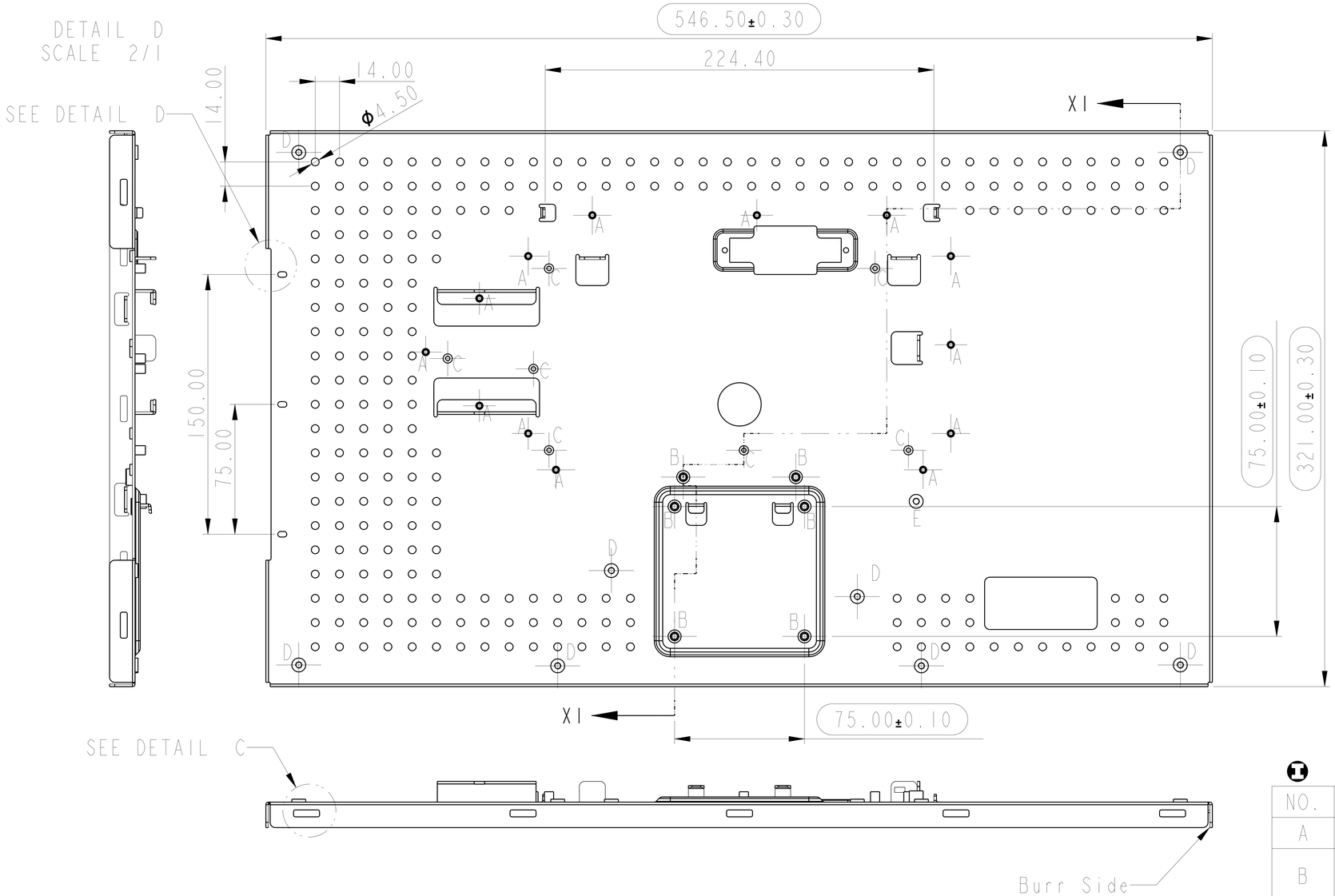

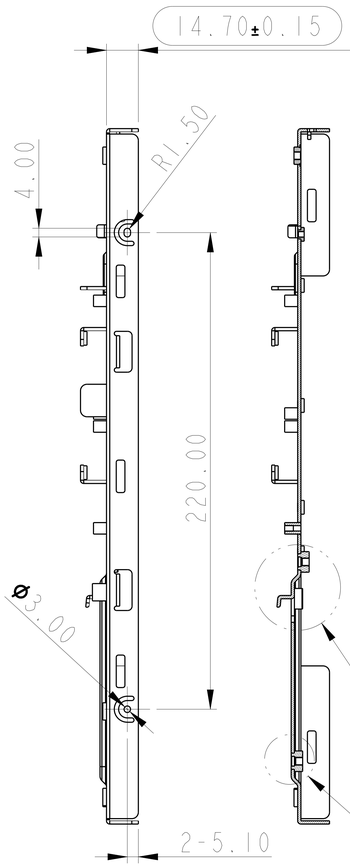

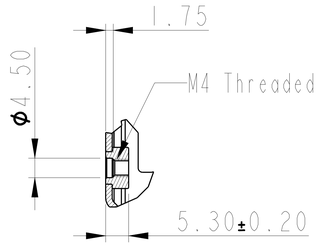

DETAIL A
SCALE 2/1

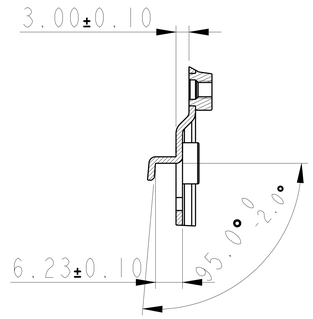

DETAIL B
SCALE 2/1

SEE DETAIL B

SEE DETAIL A

SECTION XI-XI

NO.	TYPE	DIMENSION	QT'Y	REMARK
A	NUT	M3	13	
B	NUT	M4*H5.1~5.5	6	Torque strength >18 kgf/cm See Detail A
C	Standoff	M3*H7.5	7	
D	Standoff	M4*H3.2	8	
D	Standoff	M4*H8.0	1	Through Treaded

NOTE:
1. Material: AL5052P-32, t=1.5
2. Finish: Chromate Passivation Caoting.
3. Torque strength of Stand-off & NUT:
   M3 >=10 kgf/cm.
   M4 >=18 kgf/cm.
4. Deformation and flatness <0.5 mm.
5. Burrs & sharp edge(s) allowed in 0.1 mm MAX..
   based on the principle of not hurtting hands.
6. ◯ & T Inspection dimension.
7. Unspecified Dimension refer to CAD Drawing file.
8. RoHS Compliant.

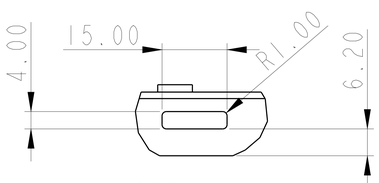

DETAIL C
SCALE 2/1

RANGE OF DIMENSION	TOLERANCE CLASS DESIGNATION f	V m	V c
UP TO 30	±0.10	±0.20	±0.50
ABOVE 30~120	±0.15	±0.30	±0.80
ABOVE 120~315	±0.20	±0.50	±1.20
ABOVE 315~1000	±0.30	±0.80	±2.00
ANGLE ±1° (±1.75/100)			

THIRD ANGLE PROJECTION

DSGD by	Laslie	2023-02-10
CHK by	-	-
APVD by	-	-
APVD NO.:		

UNITS: mm	SCALE: 1/1	SHEET: 1 OF 2	MODEL NO.: Shielby 23.8	
MATERIAL: AL 5052	TREATMENT:			
PART NAME: MAIN BRACKET				
PART NO.: 3MD628M1010	REV. 0			
3D FILE NAME: 0238_216_MIAN_BKT	DIA Laboratories ,Ltd.			

REV.	DATE	DESCRIPTION	BY	APVD

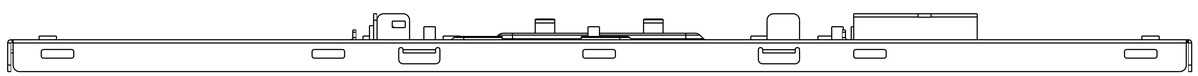

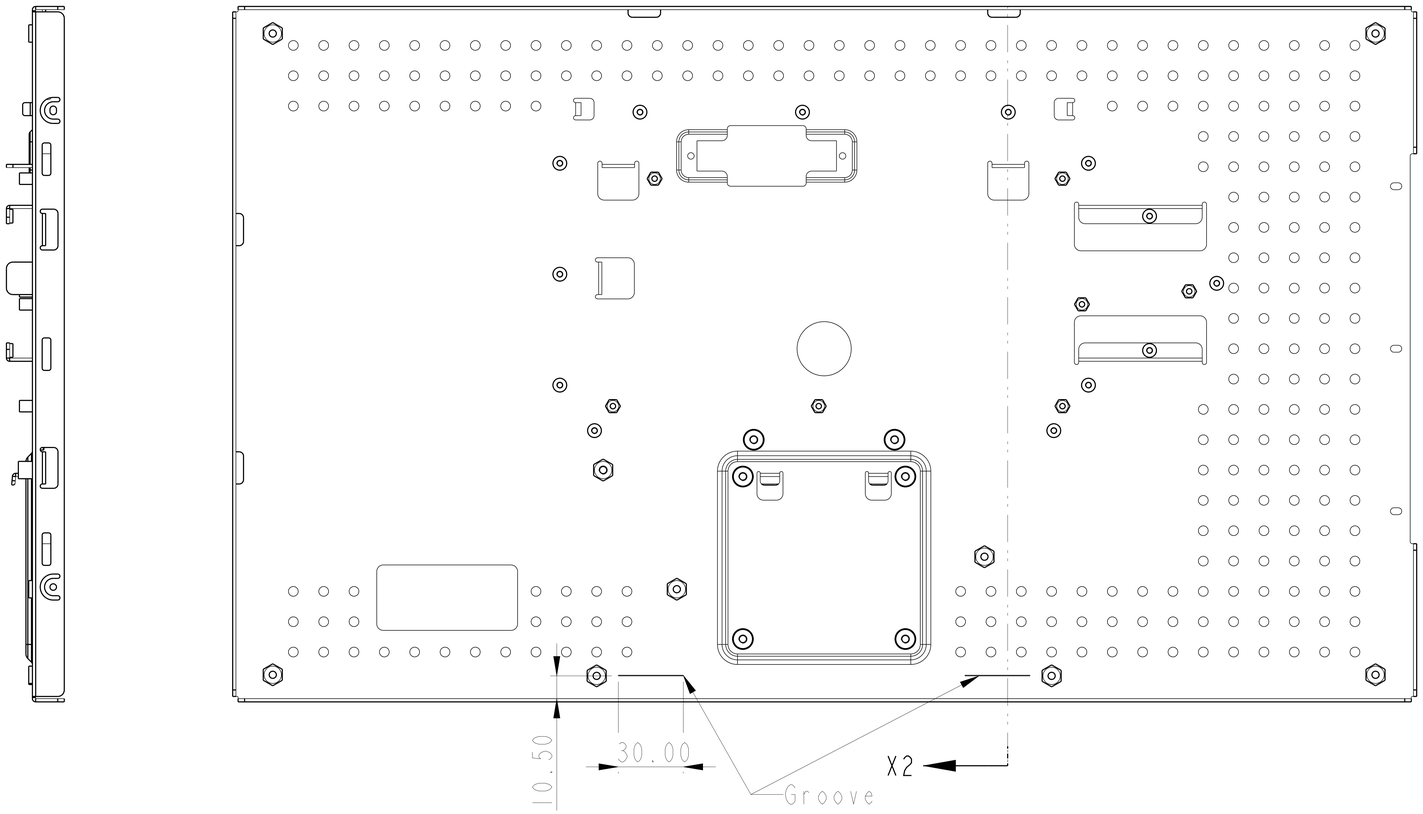

SECTION X2-X2

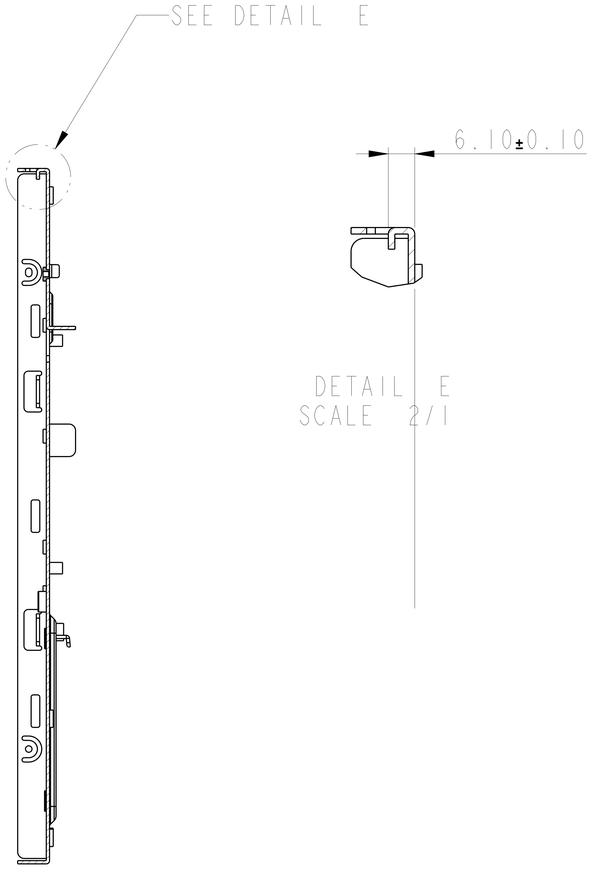

DETAIL E
SCALE 2/1

RANGE OF DIMENSION	TOLERANCE CLASS DESIGNATION f	V m	c
UP TO 30	±0.10	±0.20	±0.50
ABOVE 30~120	±0.15	±0.30	±0.80
ABOVE 120~315	±0.20	±0.50	±1.20
ABOVE 315~1000	±0.30	±0.80	±2.00
ANGLE ±1° (±1.75/100)			

THIRD ANGLE PROJECTION

UNITS: mm	SCALE: 1/1	SHEET: 2 OF 2	MODEL NO.: Shielby 23.8		
MATERIAL: AL 5052	TREATMENT:				
DSGD by Laslie	2023-03-02	PART NAME: MAIN BRACKET			
CHK by					
APVD by		PART NO.: 3MD628MI010	REV. 0		
APVD NO.:	3D FILE NAME: 0238_216_MIAN_BKT	DIVA Laboratories, Ltd.			