REV.	DATE	DESCRIPTION	BY	APVD
IP1	2023-08-25	IP1 RELEASE	Laslie	



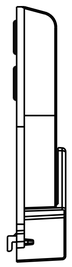

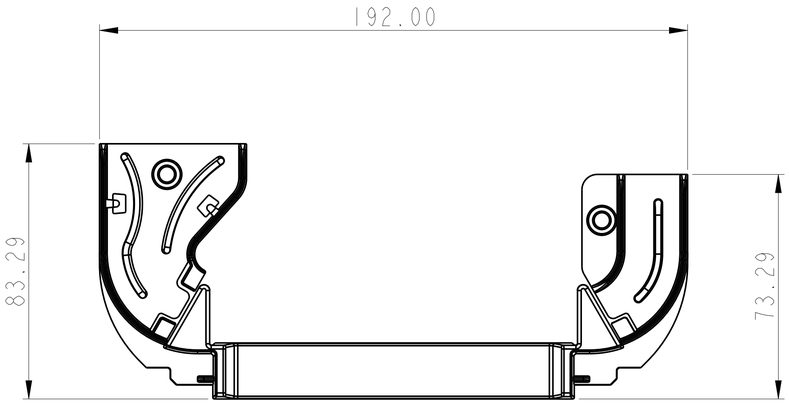

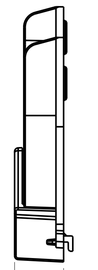

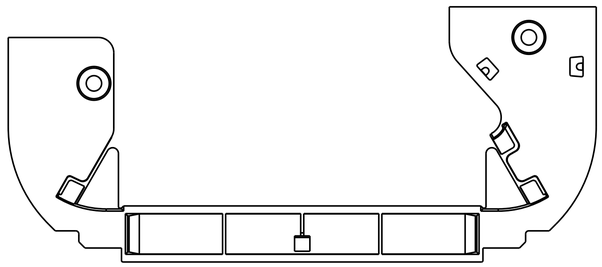

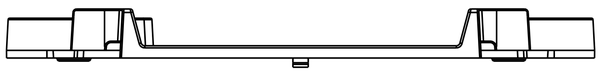

Notes:
1. Material: PC+ABS.
2. Textuer : MT-11010.
3. Color: White, PHILIPS 90273.
4. Finish:NA
5. Generally Thickness:2.5 mm
6. Warpage and flatness tolerance : <0.5 mm .
7. ◯ Inspection dimension.
8. Unspecified Dimension refer to CAD Drawing file.
9. Packing : PE Bag.
10. RoHS Compliant.

RANGE OF DIMENSION	TOLERANCE CLASS DESIGNATION			THIRD ANGLE PROJECTION	UNITS: mm	SCALE: 1/1	SHEET: 1 OF 1	MODEL NO.: Shelby 23.8
	f	V m	c		MATERIAL: PC+ABS		TREATMENT:	
UP TO 30	±0.10	±0.20	±0.50	DSGD by	Laslie	2023-08-25	PART NAME:	CABLE GUIDE
ABOVE 30~120	±0.15	±0.30	±0.80	CHK by	-	-		
ABOVE 120~315	±0.20	±0.50	±1.20	APVD by	-	-	PART NO.:	3MD628P4010 REV. 0
ABOVE 315~1000	±0.30	±0.80	±2.00	APVD No. :		3D FILE NAME :	DIVA Laboratories ,Ltd.	
ANGLE ±1° (±1.75/100)						0238_216_CABLE_GUIDE		