REV.	DATE	DESCRIPTION	BY	APVD
FP2	2023-03-02	FP2 RELEASE	Laslie	
IP1	2023-08-23	IP1 RELEASE, USB HUB MODIFY	Laslie	

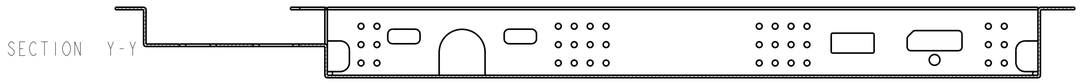

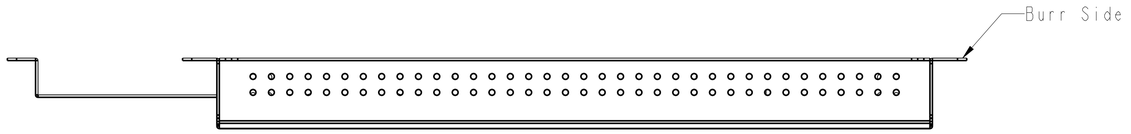

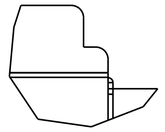

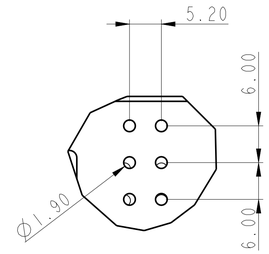

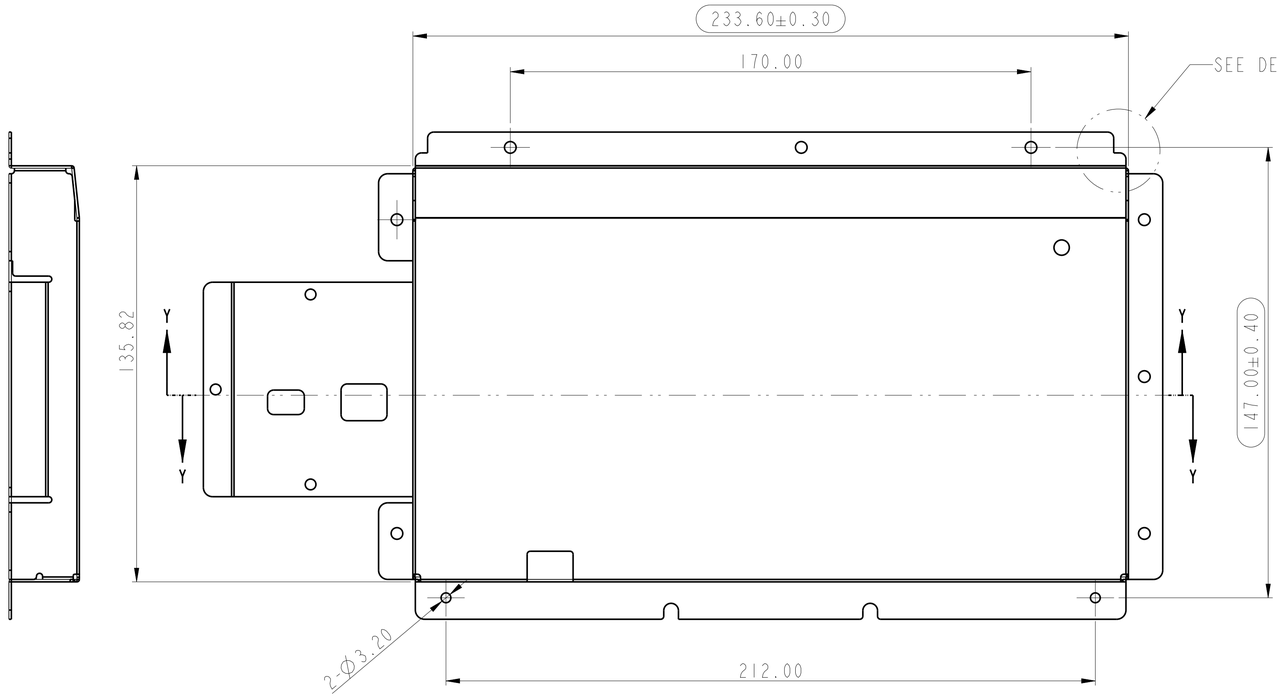

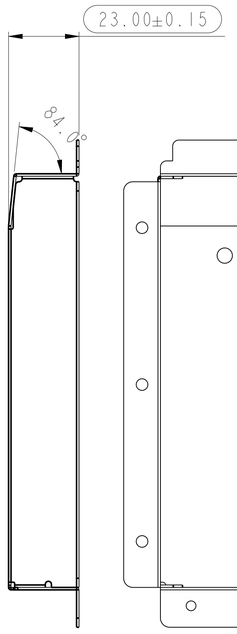

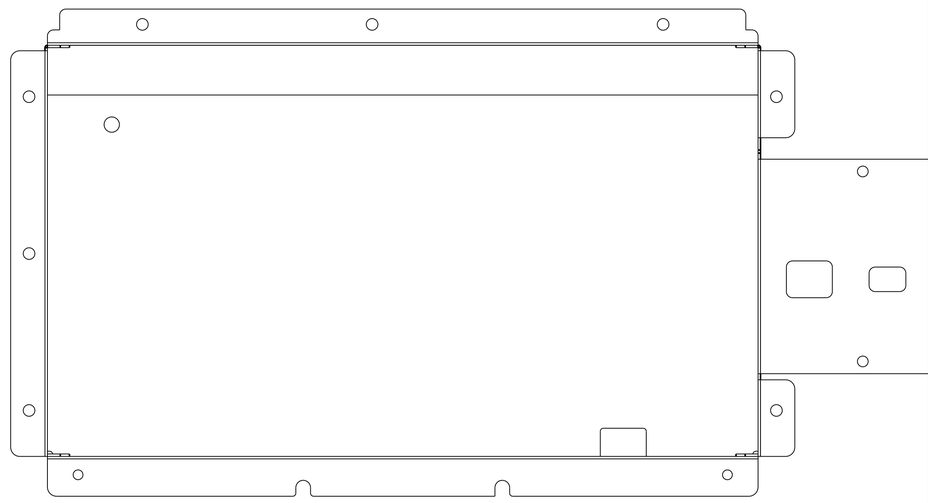

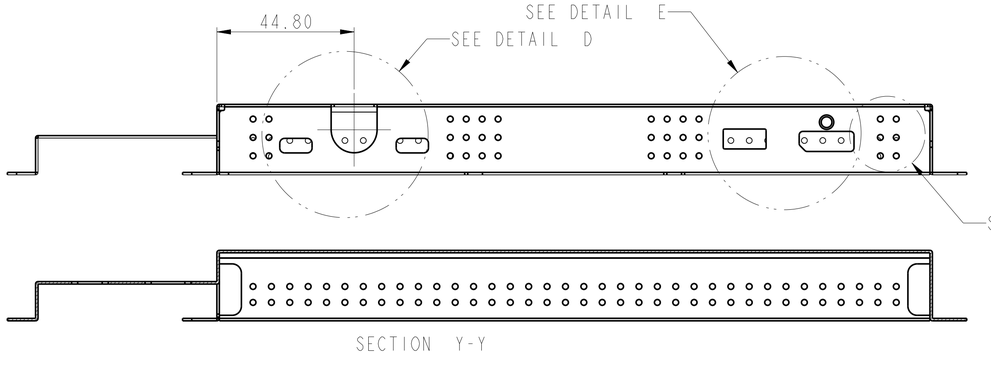

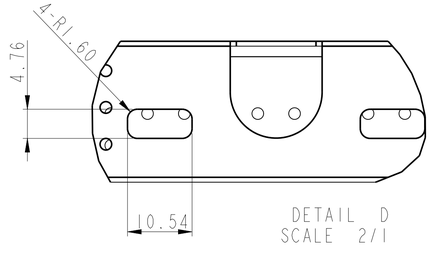

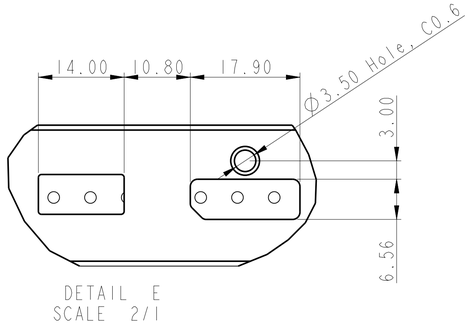

NOTE:
1. Material: AL5052P-32, t=0.8
2. Finish: Chromate Passivation Caoting.
3. Deformation and flatness <0.3 mm.
4. Burrs & sharp edge(s) allowed in 0.1 mm MAX.. based on the principle of not hurtting hands.
5. ◯ Inspection dimension.
6. Unspecified Dimension refer to CAD Drawing file.
7. RoHS Compliant.

RANGE OF DIMENSION	TOLERANCE CLASS DESIGNATION f	V m	V c
UP TO 30	±0.10	±0.20	±0.50
ABOVE 30~120	±0.15	±0.30	±0.80
ABOVE 120~315	±0.20	±0.50	±1.20
ABOVE 315~1000	±0.30	±0.80	±2.00
ANGLE ±1° (±1.75/100)			

THIRD ANGLE PROJECTION

DSGD by	Laslie	2023-03-02
CHK by		
APVD by		
APVD No. :		

UNITS: mm | SCALE: 1/1 | SHEET: 1 OF 1 | MODEL NO.: Shelby 23.8

MATERIAL: AL 5052 | TREATMENT:

PART NAME: SHIELD COVER

PART NO.: 3MD628M2010 | REV.

3D FILE NAME : 0238.216_SHELD_COVER

DMA Laboratories ,Ltd.