Rev.	Date	Update Description	Signed	Remark	Approve

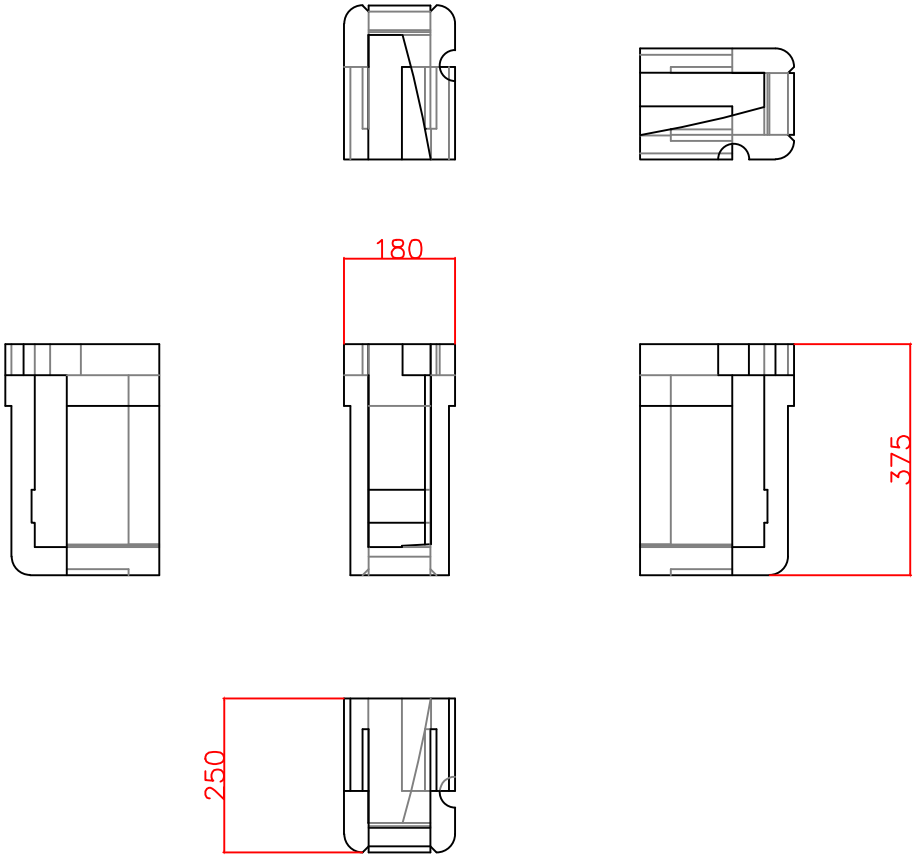

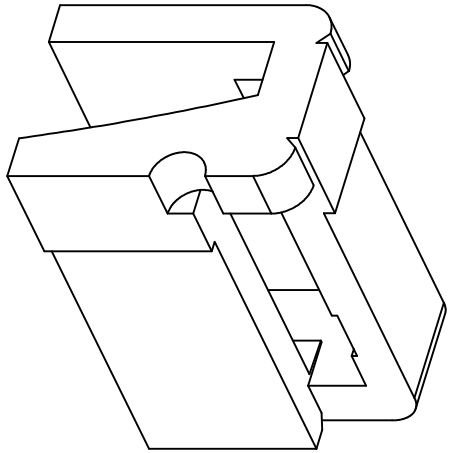

NOTE:

ITEMS		SPEC. VALUE	REMARK
Dimension L x W x H(mm)		250*180*375	
Material	Weight		
	Color	White	
	Material	EPE	
	Density	23kg/m3	
	Tolerance	±3	

SING HOME POLYFOAM CO., LTD

Projection

Customer	DIVA
Part No.	BTM-RIGHT
Project No.	55" Flexvision
Date	20230420
Designer	Jack
Scale	1:1
Checked	
Unit	mm