A Product Line of
Diodes Incorporated

PI3WVR13412

DisplayPort 1.3/1.4, HDMI 2.0 Video Switch

Features

- DisplayPort 1.3/1.4, HDMI 2.0 Electrical Standard Compatible
- 4-lane, 1:2 and 2:1 Switches that Support RBR, HBR1, HBR2, and HBR3
- Data rate: 8.1Gbps for High-Speed Channels
- Supports DDC with HPD Channel Mux/Demux at HDMI
- Supports 720Mbps High-Speed DP AUX at DP
- -1.6dB Insertion Loss for High-Speed Channels at 4.05GHz
- -3dB Bandwidth for High-Speed Channels: 7GHz
- Return loss for High-Speed Channels at 4.05GHz: -11dB
- Low Crosstalk for High-Speed Channels: -35dB at 4.05GHz
- Low Off Isolation for High-Speed Channels: -20dB at 4.05GHz
- Low Channel-to-Channel skew, 35ps max
- Low Bit-to-Bit Skew, 5ps typ (between '+' and '-' bits)
- V_{DD} Operating Range: 3.3V ±10%
- ESD Tolerance: 1.5kV HBM
- Totally Lead-Free & Fully RoHS Compliant (Notes 1 & 2)
- Halogen and Antimony Free. "Green" Device (Note 3)
- For automotive applications requiring specific change control (i.e. parts qualified to AEC-Q100/101/200, PPAP capable, and manufactured in IATF 16949 certified facilities), please contact us or your local Diodes representative.
  https://www.diodes.com/quality/product-definitions/
- Packaging (Pb-free & Green):
  - 42-pin, TQFN (ZH)

Applications

- Routing of DisplayPort Video Signals with Low-Signal Attenuation Between Source and Sink for PC and Monitor
- Routing of HDMI 2.0 Video Signals with Low-Signal Attenuation Between Source and Sink for 4K2K Ultra-High Definition Video Display and Broadcast Video Equipment

Description

The PI3WVR13412 is a multi-standard video switch with wide voltage range capability. It supports DisplayPort 1.3/1.4, HDMI 2.0, and emerging and proprietary standard.

The PI3WVR13412 can pass high-speed signals up to 1.2V peak-to-peak differential with a common-mode voltage from 0 to 3.4V for TMDS signal.

The wide voltage range allows DC-coupled multi-standard operation. Eliminating AC coupling capacitors saves board space and improves signal integrity for dense PCB design.

In addition to four high-speed lanes, PI3WVR13412 also switches the DDC and HPD signals or AUX and HPD signals using the DDC/AUX and HPD channel mux/demux.

Block Diagram

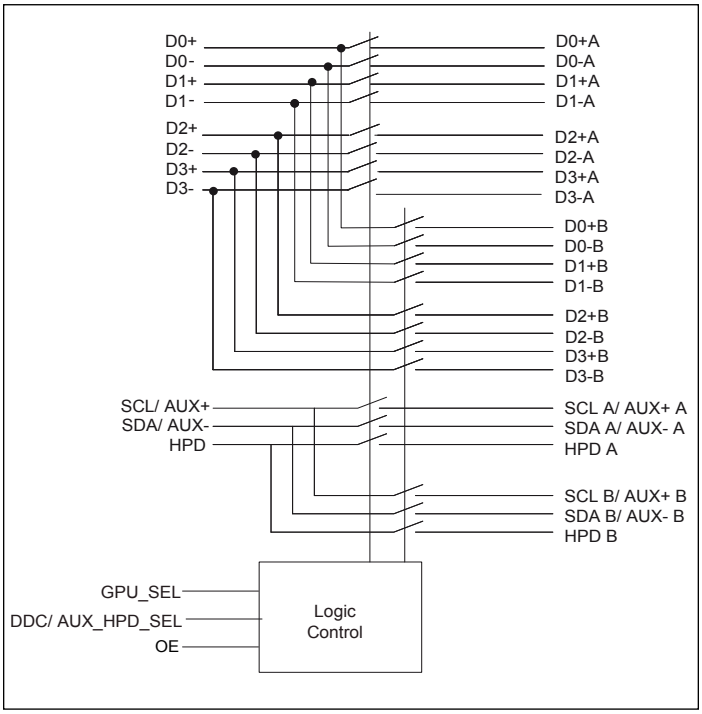

Notes:

1. No purposely added lead. Fully EU Directive 2002/95/EC (RoHS), 2011/65/EU (RoHS 2) & 2015/863/EU (RoHS 3) compliant.
2. See https://www.diodes.com/quality/lead-free/ for more information about Diodes Incorporated's definitions of Halogen- and Antimony-free, "Green" and Lead-free.
3. Halogen- and Antimony-free "Green" products are defined as those which contain <900ppm bromine, <900ppm chlorine (<1500ppm total Br + Cl) and <1000ppm antimony compounds.

® Diodes Incorporated

Pin Configuration

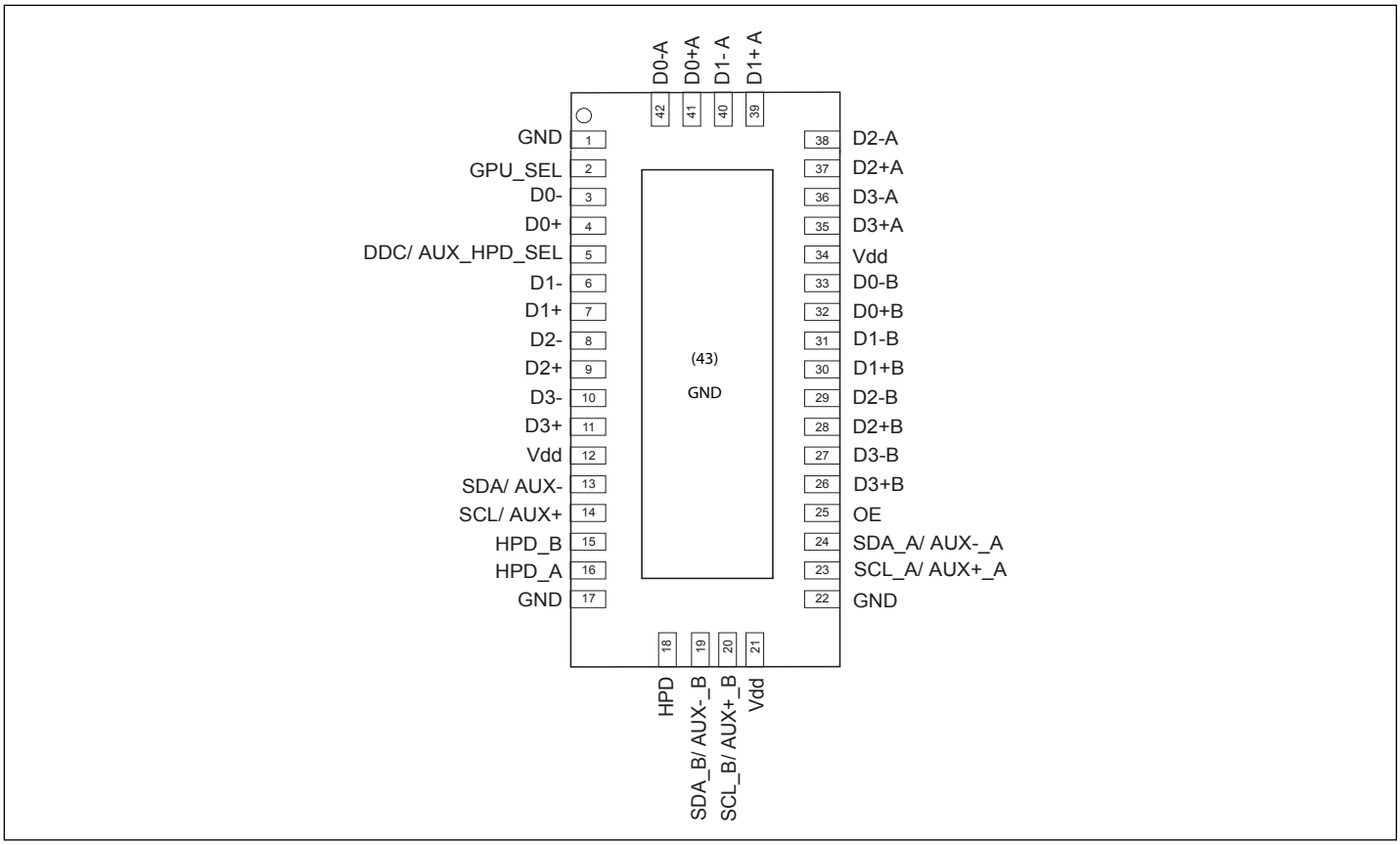

Truth Table

Control			Switch Function		
OE	**GPU_SEL**	**DDC/AUX_HPD_SEL**	**D0-D3**	**DDC/AUX**	**HPD**
High	Low	Low	A	DDC A/AUX A	HPD A
High	Low	High	A	DDC B/AUX B	HPD B
High	High	Low	B	DDC A/AUX A	HPD A
High	High	High	B	DDC B/AUX B	HPD B
Low	x	x	Hi-Z	Hi-Z	Hi-Z

® Diodes Incorporated

Pin Description

Pin#	Pin Name	Signal Type	Description
1	GND	Ground	Ground
2	GPU_SEL	I	Switch logic control
3	D0-	I/O	Negative differential signal 0 for COM port
4	D0+	I/O	Positive differential signal 0 for COM port
5	DDC/AUX_HPD_SEL	I	Switch logic control for DDC/AUX and HPD
6	D1-	I/O	Negative differential signal 1 for COM port
7	D1+	I/O	Positive differential signal 1 for COM port
8	D2-	I/O	Negative differential signal 2 for COM port
9	D2+	I/O	Positive differential signal 2 for COM port
10	D3-	I/O	Negative differential signal 3 for COM port
11	D3+	I/O	Positive differential signal 3 for COM port
12	VDD	Power	3.3V ±10% power supply
13	SDA/AUX-	I/O	SDA signal for DDC COM port or negative differential signal for AUX COM port
14	SCL/AUX+	I/O	SCLl signal for DDC COM port or positive differential signal for AUX COM port
15	HPD_B	I/O	HPD for port B
16	HPD_A	I/O	HPD for port A
17	GND	Ground	Ground
18	HPD	I/O	HPD for COM port
19	SDA_B/AUX-_B	I/O	SDA signal for DDC, port B, or negative differential signal for AUX COM port
20	SCL_B/AUX+_B	I/O	SCL signal for DDC, port B, or positive differential signal for AUX COM port
21	VDD	Power	3.3V ±10% power supply
22	GND	Ground	Ground
23	SCL_A/AUX+_A	I/O	SCL signal for DDC, port A, or positive differential signal for AUX COM port
24	SDA_A/AUX-_A	I/O	SDA signal for DDC, port A, or negative differential signal for AUX COM port
25	OE	I	Output enable. If OE is high, IC is enabled. If OE is low, IC is powered down and all I/Os are Hi-Z.
26	D3+B	I/O	Positive differential signal 3 for portB
27	D3-B	I/O	Negative differential signal 3 for portB
28	D2+B	I/O	Positive differential signal 2 for portB
29	D2-B	I/O	Negative differential signal 2 for portB
30	D1+B	I/O	Positive differential signal 1 for portB
31	D1-B	I/O	Negative differential signal 1 for portB
32	D0+B	I/O	Positive differential signal 0 for portB

© Diodes Incorporated

Pin#	Pin Name	Signal Type	Description
33	D0-B	I/O	Negative differential signal 0 for portB
34	VDD	Power	3.3V ±10% power supply
35	D3+A	I/O	Positive differential signal 3 for port A
36	D3-A	I/O	Negative differential signal 3 for port A
37	D2+A	I/O	Positive differential signal 2 for port A
38	D2-A	I/O	Negative differential signal 2 for port A
39	D1+A	I/O	Positive differential signal 1 for port A
40	D1-A	I/O	Negative differential signal 1 for port A
41	D0+A	I/O	Positive differential signal 0 for port A
42	D0-A	I/O	Negative differential signal 0 for port A
43	Center Pad	Ground	Ground

® Diodes Incorporated

Maximum Ratings

(Above which useful life may be impaired. For user guidelines, not tested.)

Storage Temperature	–65°C to +150°C
Junction Temperature	125°C
Supply Voltage to Ground Potential	–0.5V to +3.8V
DC Input Voltage	–0.5V to VDD
High-Speed Channel	–0.5V to 4V
HPD_x, SCL_x, SDA_x	–0.5V to 4V

Note:

Stresses greater than those listed under MAXIMUM RATINGS may cause permanent damage to the device. This is a stress rating only and functional operation of the device at these or any other conditions above those indicated in the operational sections of this specification is not implied. Exposure to absolute maximum rating conditions for extended periods may affect reliability.

Recommended Operating Conditions

Parameter	Description	Min.	Typ.(2)	Max.	Units
V_{DD}	Power Supply	3	3.3	3.6	V
V_{DX}	High-Speed Channels Voltage Range	0	—	4	V
V_{OTHER}	DDC/AUX/HPD Channels Voltage Range	0	—	4	V

DC Electrical Characteristics for Switching over Operating Range

(T_A = 0°C to +105°C, V_{DD} = 3.3V ±10%)

Parameter	Description	Test Conditions(1)	Min.	Typ.(2)	Max.	Units
V_{IH}	Input HIGH Voltage (SEL & OE)	Guaranteed HIGH level	1.5	—	—	V
V_{IL}	Input LOW Voltage (SEL & OE)	Guaranteed LOW level	—	—	0.75	
I_{IH}	Input HIGH Current (SEL & OE)	V_{DD} = Max., V_{IN} = V_{DD}	—	—	±1	µA
I_{IL}	Input LOW Current (SEL & OE)	V_{DD} = Max., V_{IN} = GND	—	—	±1	
I_{OFF_SB}	I/O Leakage when Part is off for Sideband Signals Only (DDC/AUX, HPD)	V_{DD} = 0V, V_{INPUT} = 0V to 3.6V	—	—	90	
R_{ON_HS}	On Resistance between Input to Output for High-Speed Signals	$V_{INPUT,cm}$ = 0V to 3.4V, $V_{INPUT,diff}$ < $1.2V_{p-p,diff}$, V_{DD} = 3.0V, I_{INPUT} = 20mA	—	8	—	Ω
$R_{ON_DDC/\ AUX}$	On Resistance between Input to Output for Sideband Signals (DDC/AUX)	V_{DD} = 3.0V, V_{INPUT} = 0 to 3.3V, I_{INPUT} = 20mA	—	8.8	—	Ω
R_{ON_HPD}	On Resistance between Input to Output for HPD Channel	V_{DD} = 3.0V, V_{INPUT} = 0 to 3.0V, I_{INPUT} = 20mA	—	8	—	Ω
I_{OZ_SB}	I/O Leakage for Sideband Signals Only (DDC, AUX, HPD)	V_{DD} = 3.6V, V_{INPUT} = 0 to 4V	—	—	5	µA

® Diodes Incorporated

Power Supply Characteristics

(T_A = 0°C to +105°C)

Parameter	Description	Test Conditions(1)	Min.	Typ.(2)	Max.	Units
I_{DD}	Power Supply Current	V_{DD} = 3.3V, V_{IN} = GND or V_{DD}	—	0.18	0.3	mA
$I_{DD,Off}$	Power Supply Current, Disabled	V_{DD} = 3.3V, V_{IN} = GND or V_{DD}, $V_{OE} < V_{IL}$	—	0.1	1	µA

Note:

1. For Max. or Min. conditions, use appropriate value specified under Electrical Characteristics for the applicable device type.
2. Typical values are at V_{DD} = 3.3V, T_A = 25°C ambient and maximum loading.

Dynamic Electrical Characteristics over Operating Range

(T_A = 0°C to +105°C, V_{DD} = 3.3V ±10%)

Parameter	Description	Test Conditions(1)		Min.	Typ.(2)	Max.	Units
X_{TALK}	Crosstalk on High-Speed Channels	—	f = 4.05GHz	—	-40	—	dB
			f = 2.7GHz	—	-50	—	
			f = 1.35GHz	—	-35	—	
O_{IRR}	OFF Isolation on High-Speed Channels	—	f = 4.05GHz	—	-20	—	
			f = 2.7GHz	—	-25	—	
			f = 1.35GHz	—	-30	—	
I_{LOSS}	Differential Insertion Loss on High-Speed Channels	4.05GHz		—	-1.6	—	dB
		2.7GHz		—	-1.1	—	
R_{loss}	Differential Return Loss on High-Speed Channels	4.05GHz		—	-11	—	dB
		2.7GHz		—	-17	—	
BW_Dx±	Bandwidth -3dB for Main High-Speed Path (Dx±)	—		—	7	—	GHz
BW_DDC/AUX/HPD	-3dB BW for DDC/AUX and HPD Signals	—		—	2	—	GHz

Note:

1. For Max. or Min. conditions, use appropriate value specified under Electrical Characteristics for the applicable device type.
2. Typical values are at V_{DD} = 3.3V, T_A = 25°C ambient and maximum loading.

Switching Characteristics

(T_A = 0°C to +105°C, V_{DD} = 3.3V ±10%)

Parameter	Description	Min.	Typ.	Max.	Units
T_{pd}	Propagation Delay (Input pin to Output pin) on all Channels	—	80	—	ps
t_{b-b}	Bit-to-Bit Skew within the Same Differential Pair of Dx± Channels	—	5	7	ps
t_{ch-ch}	Channel-to-Channel Skew of Dx± Channels	—	—	35	ps
Tsw a-b	Switch Time from Port A to Port B	—	—	1	µs
Tsw b-a	Switch Time from Port B to Port A	—	—	1	µs
Tstartup	V_{DD} Valid to Channel Enable	—	—	100	µs
Twakeup	Enabling Output by Changing OE from Low to High	—	—	100	µs

® Diodes Incorporated

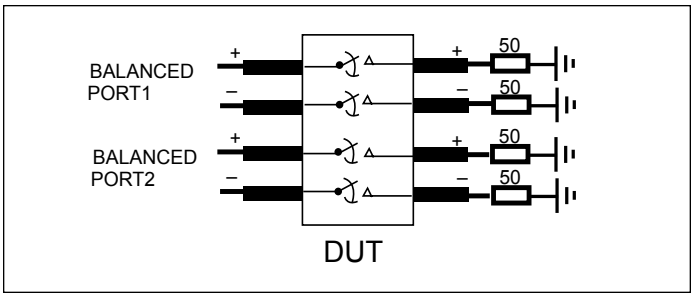

Fig 1. Crosstalk Setup

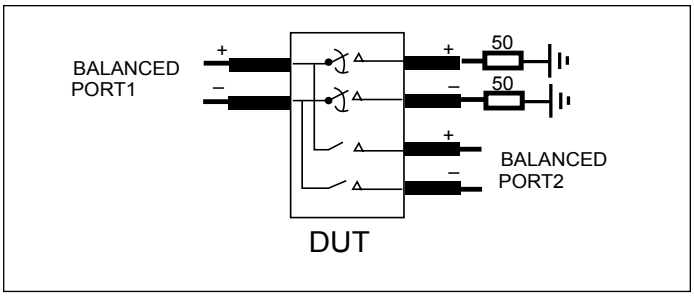

Fig 2. Off-Isolation Setup

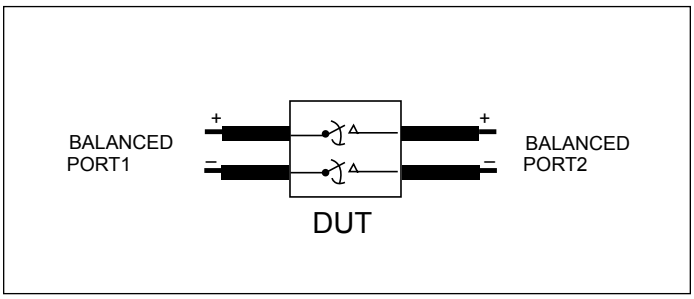

Fig 3. Differential Insertion Loss

Test Circuit for Dynamic Electrical Characteristics

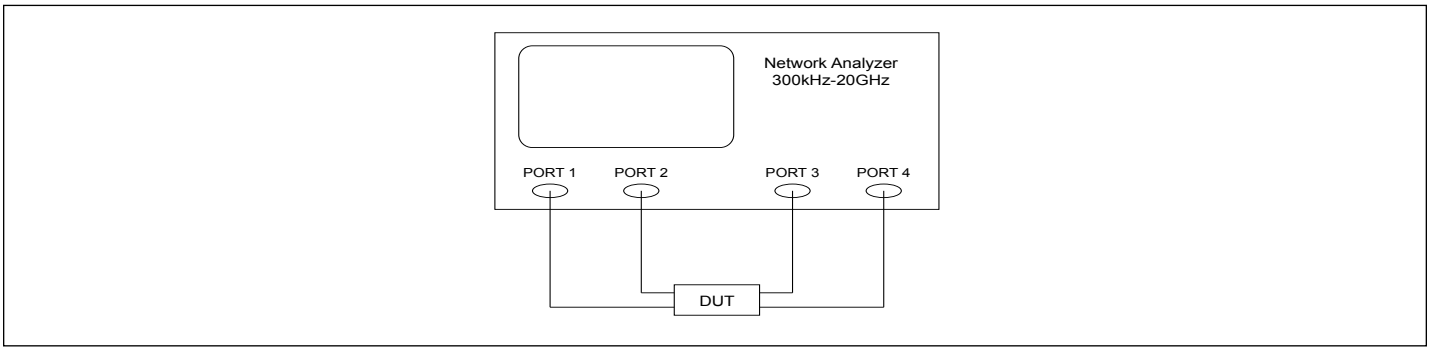

Test Circuit for Electrical Characteristics(1-4)

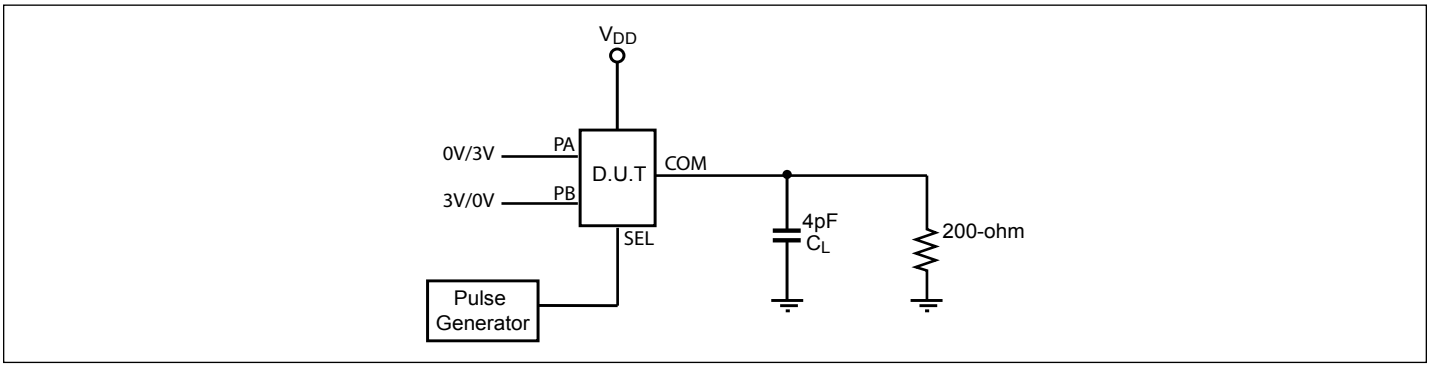

Notes:

1. C_L = Load capacitance; includes jig and probe capacitance.
2. R_T = Termination resistance: should be equal to Z_{OUT} of the Pulse Generator.
3. All input impulses are supplied by generators having the following characteristics: PRR ≤ MHz, $Z_O = 50\Omega$, $t_R \leq 2.5$ns, $t_F \leq 2.5$ns.
4. The outputs are measured one at a time with one transition per measurement.

® Diodes Incorporated

Switching Waveforms

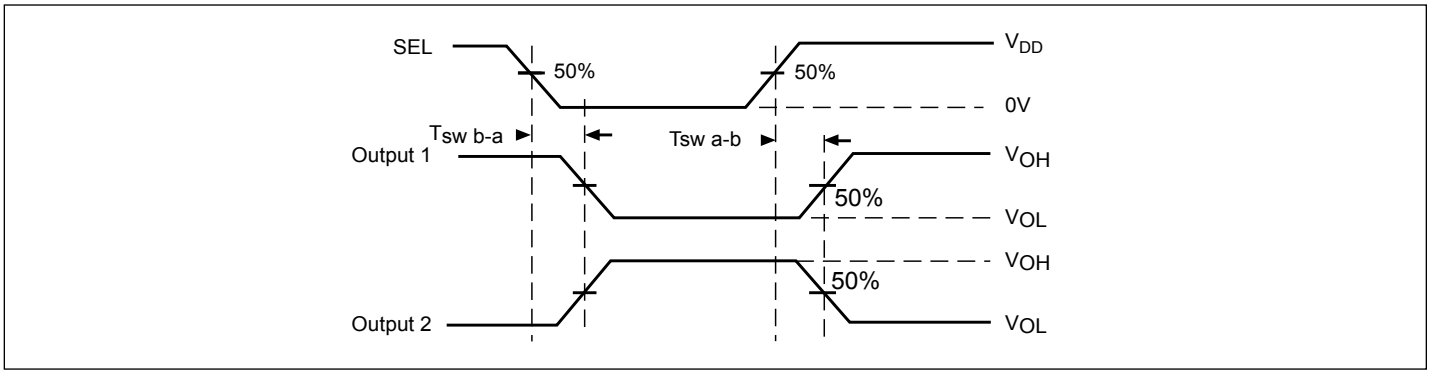

Voltage Waveforms for Select Timing

Test Condition

Output 1 Test Condition	Output 2 Test Condition
PA = Low	PA = High
PB = High	PB = Low

Part Marking



Z: Die Rev
YY: Date Code (Year)
WW: Date Code (Workweek)
1st X: Assembly Site Code
2nd X: Wafer Fab Site Code
Bar above fab code means Cu wire

© Diodes Incorporated

Packaging Mechanical

42-TQFN (ZH)

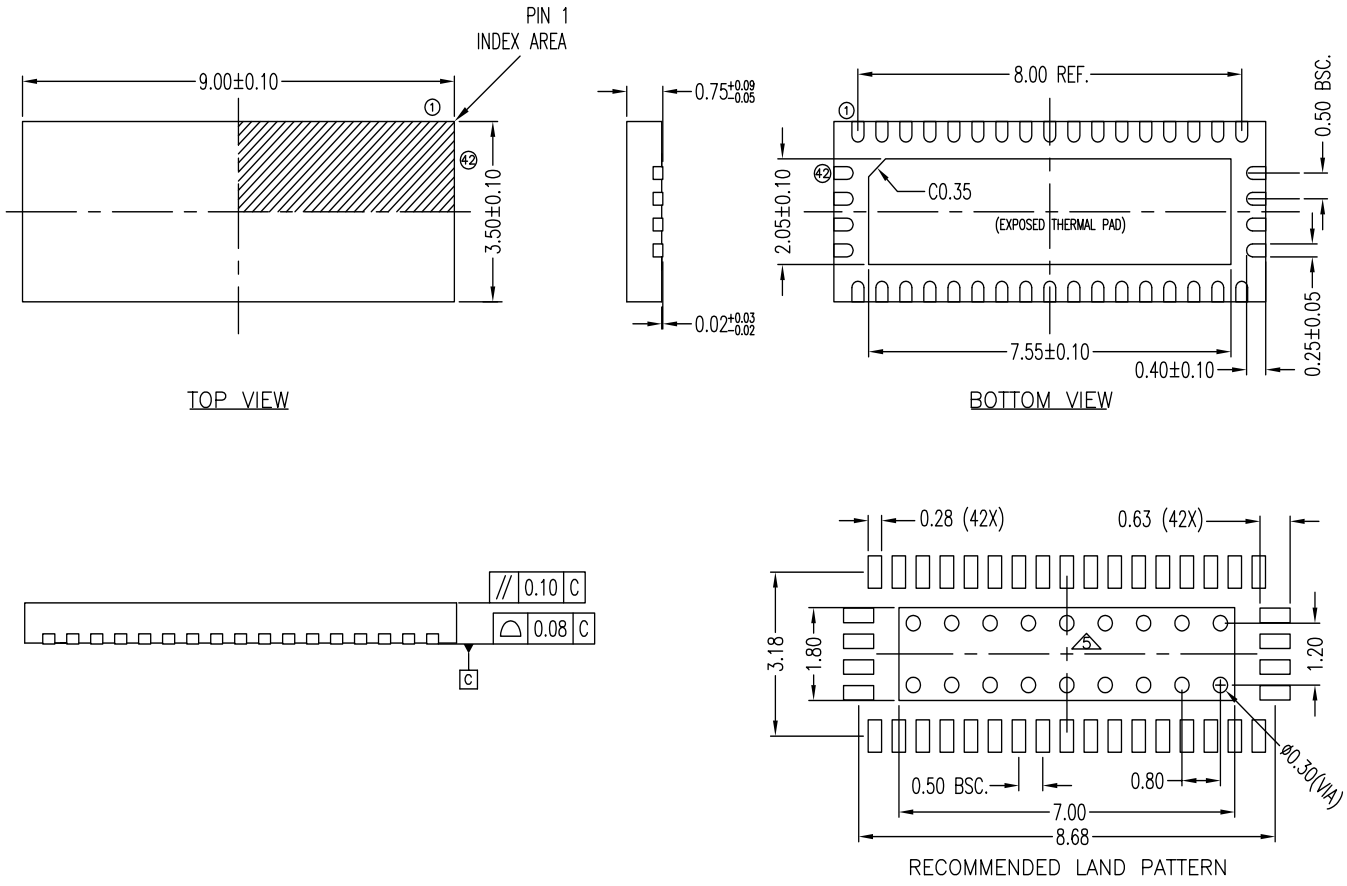

NOTE :
1. ALL DIMENSIONS ARE IN mm. ANGLES IN DEGREES.
2. COPLANARITY APPLIES TO THE EXPOSED THERMAL PAD AS WELL AS THE TERMINALS.
3. REFER JEDEC MO−220
4. RECOMMENDED LAND PATTERN IS FOR REFERENCE ONLY.
5. THERMAL PAD SOLDERING AREA (MESH STENCIL IS RECOMMENDED).

	DATE: 04/25/17
DESCRIPTION: 42-Contact, Very Thin Quad Flat No-Lead (TQFN)	
PACKAGE CODE: ZH (ZH42)	
DOCUMENT CONTROL #: PD-2035	REVISION: G

17-0266

For latest package information:

See http://www.diodes.com/design/support/packaging/pericom-packaging/packaging-mechanicals-and-thermal-characteristics/.

Ordering Information

Ordering Code	Package Code	Package Description
PI3WVR13412ZHEX	ZH	42-contact, Very Thin Quad Flat No-Lead (TQFN)

Notes:

1. No purposely added lead. Fully EU Directive 2002/95/EC (RoHS), 2011/65/EU (RoHS 2) & 2015/863/EU (RoHS 3) compliant.
2. See https://www.diodes.com/quality/lead-free/ for more information about Diodes Incorporated's definitions of Halogen- and Antimony-free, "Green" and Lead-free.
3. Halogen- and Antimony-free "Green" products are defined as those which contain <900ppm bromine, <900ppm chlorine (<1500ppm total Br + Cl) and <1000ppm antimony compounds.
4. E = Pb-free and Green
5. X suffix = Tape/Reel

© Diodes Incorporated

IMPORTANT NOTICE

1. DIODES INCORPORATED AND ITS SUBSIDIARIES ("DIODES") MAKE NO WARRANTY OF ANY KIND, EXPRESS OR IMPLIED, WITH REGARDS TO ANY INFORMATION CONTAINED IN THIS DOCUMENT, INCLUDING, BUT NOT LIMITED TO, THE IMPLIED WARRANTIES OF MERCHANTABILITY, FITNESS FOR A PARTICULAR PURPOSE OR NON-INFRINGEMENT OF THIRD PARTY INTELLECTUAL PROPERTY RIGHTS (AND THEIR EQUIVALENTS UNDER THE LAWS OF ANY JURISDICTION).

2. The Information contained herein is for informational purpose only and is provided only to illustrate the operation of Diodes products described herein and application examples. Diodes does not assume any liability arising out of the application or use of this document or any product described herein. This document is intended for skilled and technically trained engineering customers and users who design with Diodes products. Diodes products may be used to facilitate safety-related applications; however, in all instances customers and users are responsible for (a) selecting the appropriate Diodes products for their applications, (b) evaluating the suitability of the Diodes products for their intended applications, (c) ensuring their applications, which incorporate Diodes products, comply the applicable legal and regulatory requirements as well as safety and functional-safety related standards, and (d) ensuring they design with appropriate safeguards (including testing, validation, quality control techniques, redundancy, malfunction prevention, and appropriate treatment for aging degradation) to minimize the risks associated with their applications.

3. Diodes assumes no liability for any application-related information, support, assistance or feedback that may be provided by Diodes from time to time. Any customer or user of this document or products described herein will assume all risks and liabilities associated with such use, and will hold Diodes and all companies whose products are represented herein or on Diodes' websites, harmless against all damages and liabilities.

4. Products described herein may be covered by one or more United States, international or foreign patents and pending patent applications. Product names and markings noted herein may also be covered by one or more United States, international or foreign trademarks and trademark applications. Diodes does not convey any license under any of its intellectual property rights or the rights of any third parties (including third parties whose products and services may be described in this document or on Diodes' website) under this document.

5. Diodes products are provided subject to Diodes' Standard Terms and Conditions of Sale (https://www.diodes.com/about/company/terms-and-conditions/terms-and-conditions-of-sales/) or other applicable terms. This document does not alter or expand the applicable warranties provided by Diodes. Diodes does not warrant or accept any liability whatsoever in respect of any products purchased through unauthorized sales channel.

6. Diodes products and technology may not be used for or incorporated into any products or systems whose manufacture, use or sale is prohibited under any applicable laws and regulations. Should customers or users use Diodes products in contravention of any applicable laws or regulations, or for any unintended or unauthorized application, customers and users will (a) be solely responsible for any damages, losses or penalties arising in connection therewith or as a result thereof, and (b) indemnify and hold Diodes and its representatives and agents harmless against any and all claims, damages, expenses, and attorney fees arising out of, directly or indirectly, any claim relating to any noncompliance with the applicable laws and regulations, as well as any unintended or unauthorized application.

7. While efforts have been made to ensure the information contained in this document is accurate, complete and current, it may contain technical inaccuracies, omissions and typographical errors. Diodes does not warrant that information contained in this document is error-free and Diodes is under no obligation to update or otherwise correct this information. Notwithstanding the foregoing, Diodes reserves the right to make modifications, enhancements, improvements, corrections or other changes without further notice to this document and any product described herein. This document is written in English but may be translated into multiple languages for reference. Only the English version of this document is the final and determinative format released by Diodes.

8. Any unauthorized copying, modification, distribution, transmission, display or other use of this document (or any portion hereof) is prohibited. Diodes assumes no responsibility for any losses incurred by the customers or users or any third parties arising from any such unauthorized use.

Copyright © 2021 Diodes Incorporated

www.diodes.com