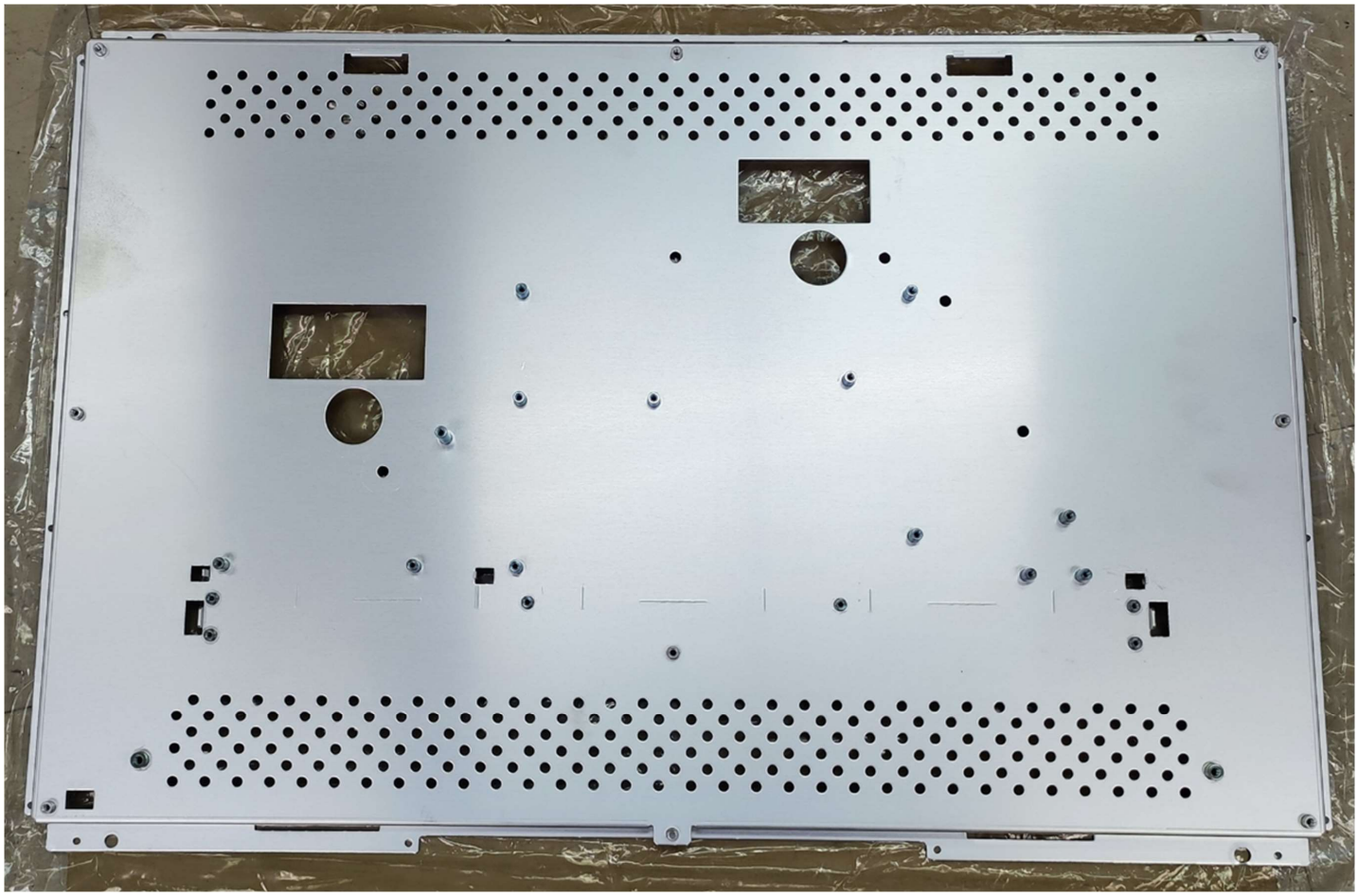


設計驗證
工程課
2023.09.07
發行

亨悅工業(股)公司

Hand Well Enterprise CO., LTD.

樣品承認書

APPROVAL SHEET

客　　戶: 鈺緯科技

(Customer Name)

料　　號: 3MD626ME030 (M3404)

(Parts Number)

設計驗證
工程課
2023.09.07
發行
鈺緯科技開發股份有限公司

品　　名: main bracket (SC2413)

(Parts Name)

日　　期: 2023/08/18

(Date)

送樣數量: 30 PCS

(Sample Quantity)

The Table of Contents

No.	Content	Ready "V"
01	客戶圖面 Drawing	V
02	首樣檢驗報告 FAI Report	V
03	材質證明 Material Certificate	V
04	SGS Report	V

(End)

REV.	DATE	DESCRIPTION	BY	APVD
-	-	-	-	-

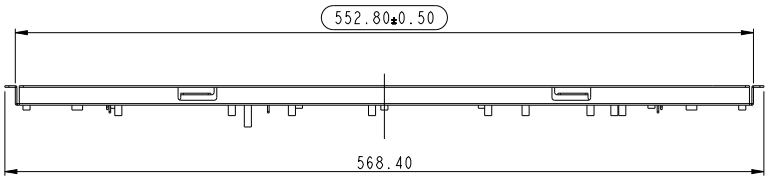

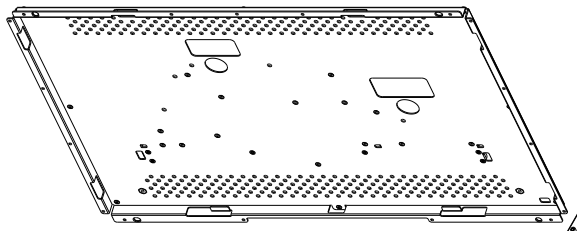

比例 2/3

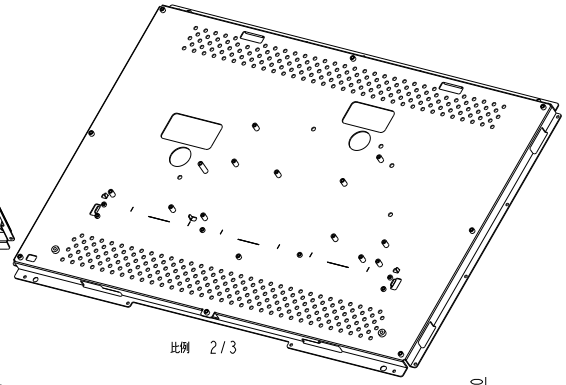

比例 2/3

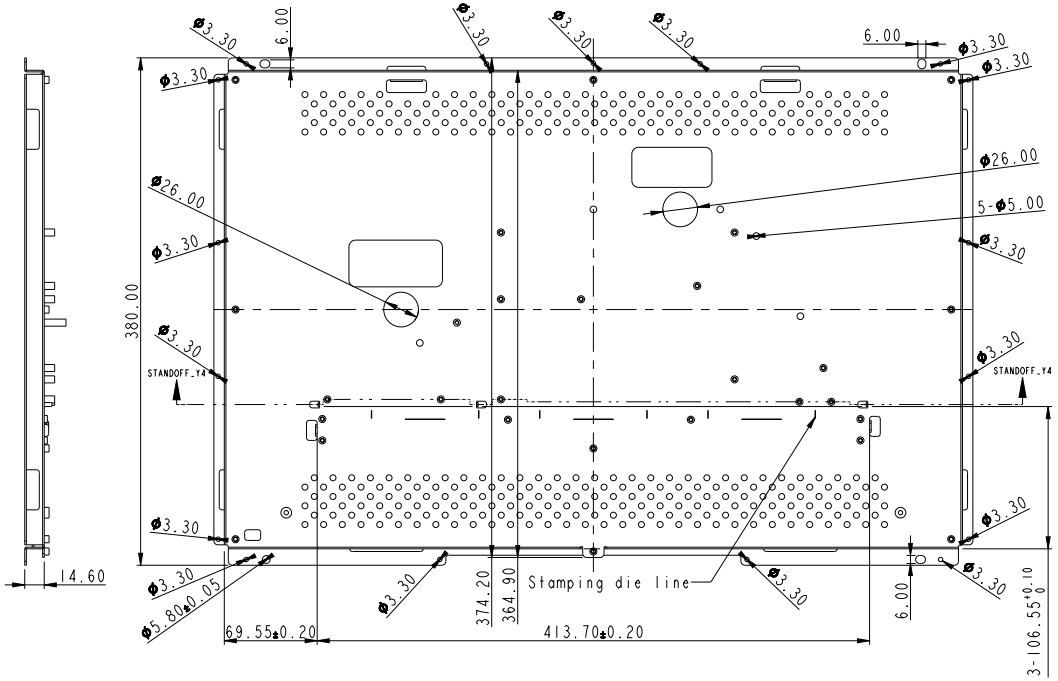

SECTION X-X

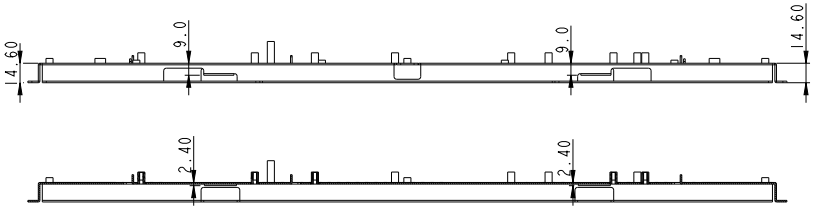

截面 STANDOFF_Y4-STANDOFF_Y4

NOTE:

1.Material: AL 5052, t=1.2 mm.
2.Finish:
  Plating:None
  Conductive chromate conversion coat:Yes
  Painting:None
3.Deformation & flatness tolerance : ±0.3
4.RoHS Compliant.
5.All pitch dimensions without accumulated.
6.Burrs not exceed 10% Max Thickness.
7.Unspecified dimension tolerance reference tolerance table.
8.Unspecified Angle Tolerance is ±0.5°.
9.Unspecified radii to be thickness.
10.All of rust was not allowed.
11." O " is MAJOR Dimension.
12.Unspecified Dimension refer to CAD Drawing file.
13.All surfaces without oil stain.
14.Burry Hole: Torque >=6kgf/cm.
  Stand Off/ NUT ;Pull sterength >=20kgf;
  Torque >=10kgf/cm.
15.DIVA QC Inspection Document NO.:QW1-014,QW1-023.

設計驗證
工程課
2023.09.07
發行
鈺緯科技開發股份有限公司

RANGE OF DIMENSION	TOLERANCE CLASS DESIGNATION V f	m	c	THIRD ANGLE PROJECTION	UNITS: mm	SCALE : 1/1	SHEET: 1 OF 2	MODEL NO.: SC2413
					MATERIAL: AL 5052 t=1.2		TREATMENT:	
UP TO 30	±0.10	±0.20	±0.50	DSGD by Kate Chiang	2021.09.03	PART NAME: MAIN BRACKET (SC2413)		
ABOVE 30~120	±0.15	±0.30	±0.80	CHK by				
ABOVE 120~315	±0.20	±0.50	±1.20	APVD by Laslie	2023-09-07	PART NO.: 3MD626ME030		REV. 0
ABOVE 315~1000	±0.30	±0.80	±2.00	CAD NO.: (M3404)	3D FILE NAME: 24_00001_MAIN_BRACKET	DIVA Laboratories ,Ltd.		
ANGLE ±1° (±1.75/100)								

REV.	DATE	DESCRIPTION	BY	APVD
-	-	-	-	-

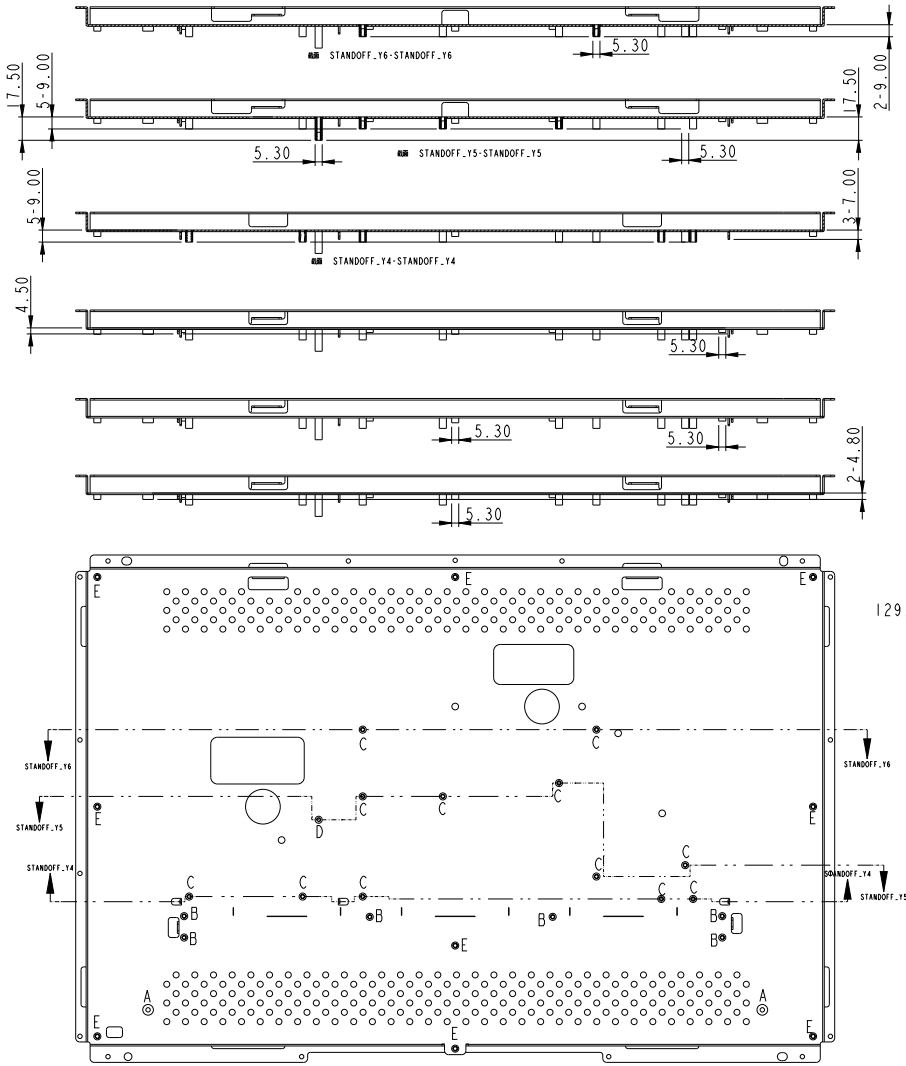

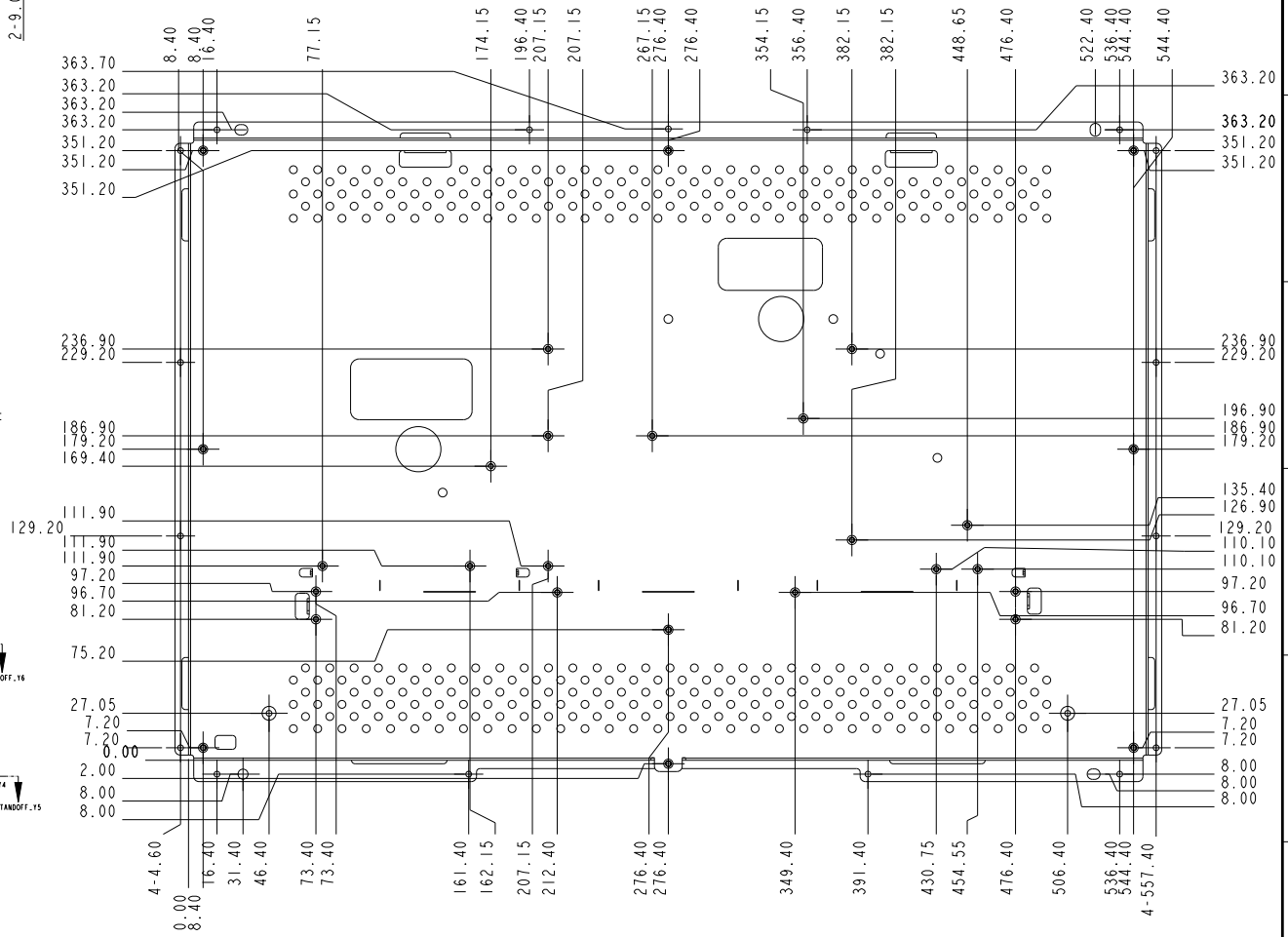

STANDOFF TYPE:					
Symbol	Thread type	Diameter	High	Description	QTY
A	M4	Ø8.0	4.8	Through hole,Through thread.	2
B	M3	Ø5.3	3.5	Through hole,Through thread.	6
C	M3	Ø5.3	9.0	Through hole,Through thread.	12
D	M3	Ø5.3	17.5	Through hole,Thread depth 8.0.	1
E	#6-32	Ø5.3	4.8	Through hole,Through thread.	9

設計驗證
工程課
2023.09.07
發行
鈺緯科技開發股份有限公司

NOTE:
1.Material: AL 5052, t=1.2 mm.
2.Finish:
Plating:None
Conductive chromate conversion coat:None
Painting:None
3.Flatness tolerance : ±0.5
4.RoHS Compliant.
5.All pitch dimensions without accumulated.
6.Burrs not exceed 10% Max Thickness.
7.Unspecified dimension tolerance reference tolerance table.
8.Unspecified Angle Tolerance is ±0.5°.
9.Unspecified radii to be thickness.
10.All of rust was not allowed.
11." Q " is MAJOR Dimension.
12.Unspecified Dimension refer to CAD Drawing file.
13.All surfaces without oil stain.
14.Burry Hole: Torque >=6kgf/cm.
Stand Off/ NUT :Pull sterength >=20kgf;
Torque >=10kgf/cm.
15.DIVA QC Inspection Document NO.:QWI-014,QWI-023.

RANGE OF DIMENSION	TOLERANCE CLASS DESIGNATION			THIRD ANGLE PROJECTION	UNITS: mm	SCALE : 1/1	SHEET: 2 OF 2	MODEL NO.: SC2413
	v				MATERIAL: AL 5052 t=1.2		TREATMENT:	
	f	m	c					
UP TO 30	±0.10	±0.20	±0.50	DSGD by Kate Chiang	2021.09.03	PART NAME: MAIN BRACKET (SC2413)		
ABOVE 30~120	±0.15	±0.30	±0.80	CHK by				
ABOVE 120~315	±0.20	±0.50	±1.20	APVD by Laslie	2023-09-07	PART NO.: 3MD626ME030		REV. 0
ABOVE 315~1000	±0.30	±0.80	±2.00	APVD NO.: (M3404)	D FILE NAME: 24_00001_MAIN_BRACKET	DIVA Laboratories ,Ltd.		
ANGLE ±1° (±1.75/100)								

亨 悅 工 業 股 份 有 限 公 司

樣品尺寸檢驗報告

CUSTOMER 客戶	鈺緯		DATE OF Manufacture 製造日期	2023/8/9
PART NAME 品名(英文)	main_bracket(SC2413)		DATE OF INSP 檢驗日期	2023/8/14
P/N 品號	3MD626ME030(M3404)		MATERIAL 材質	AL5052 1.2t
SURFACE TREAT 表面處理	鉻酸處理	成品數量	30	
PRINTING 印刷	無	抽樣數量	5	
Measuring Instrument	A:游標卡尺 B:高度規 C:角度規 D:分厘卡 E:孔規 F:投影机 G:R角規 H:牙規 I:量測儀器 J:外觀目視 K:檢驗治具(螺柱位置)			

No	Location 位置	Specification 圖面尺寸	SAMPLE READING 量測記錄							
			1	2	3	4	5	RE-SULT	MI	備註
1	B4	552.8±0.5	552.89	552.76	552.96	552.96	552.74	OK	A	
2	C4	568.4±0.3	568.43	568.37	568.31	568.46	568.48	OK	A	
3	D2	§3.30	OK	OK	OK	OK	OK	OK	A	
4	D2	6±0.1	5.97	5.97	6.02	6.02	5.99	OK	A	
5	D3	§3.30	OK	OK	OK	OK	OK	OK	A	
6	D4	§3.30	OK	OK	OK	OK	OK	OK	A	
7	D4	§3.30	OK	OK	OK	OK	OK	OK	A	
8	D5	6±0.4	6.01	5.96	5.88	6.08	6.07	OK	A	
9	D6	§3.30	OK	OK	OK	OK	OK	OK	A	
10	D6	§3.30	OK	OK	OK	OK	OK	OK	A	
11	D6	§26	OK	OK	OK	OK	OK	OK	A	
12	D6	5-§5.00	OK	OK	OK	OK	OK	OK	A	
13	D6	§3.30	OK	OK	OK	OK	OK	OK	A	
14	E6	§3.30	OK	OK	OK	OK	OK	OK	A	
15	E6	Standoff-y4	OK	OK	OK	OK	OK	OK	A	
16	F6	§3.30	OK	OK	OK	OK	OK	OK	A	
17	F6	106.55+0.1-0	106.54	106.54	106.53	106.54	106.54	OK	A	
18	F6	§3.30	OK	OK	OK	OK	OK	OK	A	
19	F6	6±0.1	5.98	6.03	6.00	6.02	6.01	OK	A	
20	F5	§3.30	OK	OK	OK	OK	OK	OK	A	
21	F4	413.7±0.2	413.75	413.65	413.65	413.69	413.66	OK	A	
22	F3	§3.30	OK	OK	OK	OK	OK	OK	A	
23	G2	69.55±0.2	69.55	69.49	69.57	69.61	69.59	OK	A	
24	G2	§5.80±0.05	OK	OK	OK	OK	OK	OK	A	
25	F2	§3.30	OK	OK	OK	OK	OK	OK	A	
26	F2	§3.30	OK	OK	OK	OK	OK	OK	A	
27	E2	§3.30	OK	OK	OK	OK	OK	OK	A	
28	E2	§3.30	OK	OK	OK	OK	OK	OK	A	

29	**E1**	380±0.3	379.90	380.09	379.98	380.02	379.96	OK	A	
30	**F1**	14.6±0.1	14.57	14.57	14.58	14.57	14.61	OK	A	
31	C7	14.6±0.1	14.59	14.60	14.60	14.60	14.58	OK	A	
32	**D7**	1.2±0.1	1.17	1.20	1.20	1.20	1.23	OK	A	
33	**E7**	380±0.3	379.92	379.93	379.92	379.96	380.03	OK	A	
34	E7	358.4±0.3	358.31	358.40	358.45	358.39	358.30	OK	A	
35	F7	14.6±0.1	14.60	14.62	14.59	14.57	14.59	OK	A	
36	**G2**	14.6±0.1	14.62	14.57	14.63	14.60	14.57	OK	A	
37	**G3**	9±0.1	9.00	8.97	9.02	8.99	9.03	OK	A	
38	**G5**	9±0.1	9.02	8.99	9.03	9.01	9.00	OK	A	
39	**G6**	14.6±0.1	14.57	14.61	14.58	14.57	14.58	OK	A	
40	**H3**	2.4±0.1	2.40	2.38	2.37	2.37	2.37	OK	A	
41	**H5**	2.4±0.1	2.39	2.39	2.43	2.43	2.41	OK	A	
42	**D9**	8.4±0.1	8.39	8.39	8.39	8.43	8.41	OK	A	
43	**D12**	7.2±0.1	7.21	7.22	7.23	7.19	7.20	OK	A	
44	**F9**	8±0.1	7.99	8.02	7.97	8.00	8.01	OK	A	
45	**F12**	8±0.1	8.00	7.97	8.01	7.97	8.01	OK	A	
									主管	檢驗者
									湯昊丞	呂錫泰

中鋼鋁業股份有限公司
C. S. ALUMINIUM CORPORATION

品質證明書
TEST CERTIFICATE

高雄市小港區東林路17號
17, TUNG-LIN ROAD, HSIAO KANG,KAOHSIUNG(812),TAIWAN
TEL: 886-7-8718666-6532 FAX: 886-7-8721967
控制號碼：M0076 0064

客戶名稱 SOLD TO	KING DA LONG ENTERPRISES CO.,LTD 群達龍企業股份有限公司			產品名稱 PRODUCT	AL FLAT SHEET
				應收憑單號碼 AR. NO.	AR2106000000851
規格名稱 SPEC.	JIS H4000 A5052P-H32 GFQ1			客戶編號 CUSTOMER NO.	30019836
				交運日期 SHIPPING DATE	JUN.15,2021
檢驗 INSP.	CAC MILL INSPECTION	T/C	1/0	客戶訂單編號 CUST. ORDER NO.	20210316003

| | | | | |

測試報告
Test Report

號碼(No.): EKR23600176　　日期(Date): 09-Jun-2023　　

中鋼鋁業股份有限公司 (C.S. ALUMINIUM CORPORATION)
高雄市小港區東林路17號 (NO.17 TUNG LIN ROAD ,HSIAOKANG DISTRICT, KAOHSIUNG CITY)

以下測試樣品係由申請廠商所提供及確認 (The following sample(s) was/were submitted and identified by the applicant as)：

送樣廠商(Sample Submitted By)	:	中鋼鋁業股份有限公司 (C.S. ALUMINIUM CORPORATION)
樣品名稱(Sample Name)	:	ALUMINIUM PLATE /SHEET (鋁板/片)
樣品型號(Style/Item No.)	:	ALUMINIUM ALLOY 5052

==========

收件日(Sample Receiving Date)	:	02-Jun-2023
測試期間(Testing Period)	:	02-Jun-2023 to 09-Jun-2023

測試需求(Test Requested) :　依據客戶指定，參考RoHS 2011/65/EU Annex II及其修訂指令(EU) 2015/863測試鎘、鉛、汞、六價鉻、多溴聯苯、多溴聯苯醚, DBP, BBP, DEHP, DIBP。 (As specified by client, with reference to RoHS 2011/65/EU Annex II and amending Directive (EU) 2015/863 to determine Cadmium, Lead, Mercury, Cr(VI), PBBs, PBDEs, DBP, BBP, DEHP, DIBP contents in the submitted sample(s).)

測試結果(Test Results) :　請參閱下一頁 (Please refer to following pages.)

結　　論(Conclusion) :　根據客戶所提供的樣品，其鎘、鉛、汞、六價鉻、多溴聯苯、多溴聯苯醚, DBP, BBP, DEHP, DIBP的測試結果符合RoHS 2011/65/EU Annex II暨其修訂指令(EU) 2015/863之限值要求。 (Based on the performed tests on submitted sample(s), the test results of Cadmium, Lead, Mercury, Cr(VI), PBBs, PBDEs, DBP, BBP, DEHP, DIBP comply with the limits as set by RoHS Directive (EU) 2015/863 amending Annex II to Directive 2011/65/EU.)

報告簽署人/張伯睿 博士/部經理
Ray Chang, Ph.D./ Department Manager
Signed for and on behalf of
SGS TAIWAN LTD.
化學實驗室-高雄/Chemical Laboratory-Kaohsiung

CHECK REPORT
PIN CODE: B5B6BC54

This document is issued by the Company subject to its General Conditions of Service printed overleaf, available on request or accessible at https://www.sgs.com.tw/terms-of-service and, for electronic format documents, subject to Terms and Conditions for Electronic Documents at https://www.sgs.com.tw/terms-of-service. Attention is drawn to the limitation of liability, indemnification and jurisdiction issues defined therein. Any holder of this document is advised that information contained hereon reflects the Company's findings at the time of its intervention only and within the limits of client's instruction, if any. The Company's sole responsibility is to its Client and this document does not exonerate parties to a transaction from exercising all their rights and obligations under the transaction documents. This document cannot be reproduced, except in full, without prior written approval of the Company. Any unauthorized alteration, forgery or falsification of the content or appearance of this document is unlawful and offenders may be prosecuted to the fullest extent of the law. Unless otherwise stated the results shown in this test report refer only to the sample(s) tested.

測試報告
Test Report

中鋼鋁業股份有限公司 (C.S. ALUMINIUM CORPORATION)
高雄市小港區東林路17號 (NO.17 TUNG LIN ROAD ,HSIAOKANG DISTRICT, KAOHSIUNG CITY)

測試部位敘述 (Test Part Description)

No.1 : 銀色金屬 (SILVER COLORED METAL)

測試結果 (Test Results)

測試項目 (Test Items)	測試方法 (Method)	單位 (Unit)	MDL	結果 (Result) No.1	限值 (Limit)
鎘 (Cd) (Cadmium (Cd))	參考IEC 62321-5: 2013，以感應耦合電漿發射光譜儀分析。(With reference to IEC 62321-5: 2013, analysis was performed by ICP-OES.)	mg/kg	2	n.d.	100
鉛 (Pb) (Lead (Pb))		mg/kg	2	10.3	1000
汞 (Hg) (Mercury (Hg))	參考IEC 62321-4: 2013+ AMD1: 2017，以感應耦合電漿發射光譜儀分析。(With reference to IEC 62321-4: 2013+ AMD1: 2017, analysis was performed by ICP-OES.)	mg/kg	2	n.d.	1000
六價鉻 (Hexavalent Chromium) Cr(VI) (#2)	參考IEC 62321-7-1: 2015，以紫外光-可見光分光光度計分析。(With reference to IEC 62321-7-1: 2015, analysis was performed by UV-VIS.)	μg/cm²	0.1	n.d.	-
一溴聯苯 (Monobromobiphenyl)	參考IEC 62321-6: 2015，以氣相層析儀/質譜儀分析。(With reference to IEC 62321-6: 2015, analysis was performed by GC/MS.)	mg/kg	5	n.d.	-
二溴聯苯 (Dibromobiphenyl)		mg/kg	5	n.d.	-
三溴聯苯 (Tribromobiphenyl)		mg/kg	5	n.d.	-
四溴聯苯 (Tetrabromobiphenyl)		mg/kg	5	n.d.	-
五溴聯苯 (Pentabromobiphenyl)		mg/kg	5	n.d.	-
六溴聯苯 (Hexabromobiphenyl)		mg/kg	5	n.d.	-
七溴聯苯 (Heptabromobiphenyl)		mg/kg	5	n.d.	-
八溴聯苯 (Octabromobiphenyl)		mg/kg	5	n.d.	-
九溴聯苯 (Nonabromobiphenyl)		mg/kg	5	n.d.	-
十溴聯苯 (Decabromobiphenyl)		mg/kg	5	n.d.	-
多溴聯苯總和 (Sum of PBBs)		mg/kg	-	n.d.	1000

This document is issued by the Company subject to its General Conditions of Service printed overleaf, available on request or accessible at https://www.sgs.com.tw/terms-of-service and, for electronic format documents, subject to Terms and Conditions for Electronic Documents at https://www.sgs.com.tw/terms-of-service. Attention is drawn to the limitation of liability, indemnification and jurisdiction issues defined therein. Any holder of this document is advised that information contained hereon reflects the Company's findings at the time of its intervention only and within the limits of client's instruction, if any. The Company's sole responsibility is to its Client and this document does not exonerate parties to a transaction from exercising all their rights and obligations under the transaction documents. This document cannot be reproduced, except in full, without prior written approval of the Company. Any unauthorized alteration, forgery or falsification of the content or appearance of this document is unlawful and offenders may be prosecuted to the fullest extent of the law. Unless otherwise stated the results shown in this test report refer only to the sample(s) tested.

中鋼鋁業股份有限公司 (C.S. ALUMINIUM CORPORATION)
高雄市小港區東林路17號 (NO.17 TUNG LIN ROAD ,HSIAOKANG DISTRICT, KAOHSIUNG CITY)

測試項目 (Test Items)	測試方法 (Method)	單位 (Unit)	MDL	結果 (Result) No.1	限值 (Limit)
一溴聯苯醚 (Monobromodiphenyl ether)	參考IEC 62321-6: 2015，以氣相層析儀/質譜儀分析。(With reference to IEC 62321-6: 2015, analysis was performed by GC/MS.)	mg/kg	5	n.d.	-
二溴聯苯醚 (Dibromodiphenyl ether)		mg/kg	5	n.d.	-
三溴聯苯醚 (Tribromodiphenyl ether)		mg/kg	5	n.d.	-
四溴聯苯醚 (Tetrabromodiphenyl ether)		mg/kg	5	n.d.	-
五溴聯苯醚 (Pentabromodiphenyl ether)		mg/kg	5	n.d.	-
六溴聯苯醚 (Hexabromodiphenyl ether)		mg/kg	5	n.d.	-
七溴聯苯醚 (Heptabromodiphenyl ether)		mg/kg	5	n.d.	-
八溴聯苯醚 (Octabromodiphenyl ether)		mg/kg	5	n.d.	-
九溴聯苯醚 (Nonabromodiphenyl ether)		mg/kg	5	n.d.	-
十溴聯苯醚 (Decabromodiphenyl ether)		mg/kg	5	n.d.	-
多溴聯苯醚總和 (Sum of PBDEs)		mg/kg	-	n.d.	1000
鄰苯二甲酸丁苯甲酯 (BBP) (Butyl benzyl phthalate (BBP))	參考IEC 62321-8: 2017，以氣相層析儀/質譜儀分析。(With reference to IEC 62321-8: 2017, analysis was performed by GC/MS.)	mg/kg	50	n.d.	1000
鄰苯二甲酸二丁酯 (DBP) (Dibutyl phthalate (DBP))		mg/kg	50	n.d.	1000
鄰苯二甲酸二異丁酯 (DIBP) (Diisobutyl phthalate (DIBP))		mg/kg	50	n.d.	1000
鄰苯二甲酸二(2-乙基己基)酯 (DEHP) (Di-(2-ethylhexyl) phthalate (DEHP))		mg/kg	50	n.d.	1000

This document is issued by the Company subject to its General Conditions of Service printed overleaf, available on request or accessible at https://www.sgs.com.tw/terms-of-service and, for electronic format documents, subject to Terms and Conditions for Electronic Documents at https://www.sgs.com.tw/terms-of-service. Attention is drawn to the limitation of liability, indemnification and jurisdiction issues defined therein. Any holder of this document is advised that information contained hereon reflects the Company's findings at the time of its intervention only and within the limits of client's instruction, if any. The Company's sole responsibility is to its Client and this document does not exonerate parties to a transaction from exercising all their rights and obligations under the transaction documents. This document cannot be reproduced, except in full, without prior written approval of the Company. Any unauthorized alteration, forgery or falsification of the content or appearance of this document is unlawful and offenders may be prosecuted to the fullest extent of the law. Unless otherwise stated the results shown in this test report refer only to the sample(s) tested.

中鋼鋁業股份有限公司 (C.S. ALUMINIUM CORPORATION)
高雄市小港區東林路17號 (NO.17 TUNG LIN ROAD ,HSIAOKANG DISTRICT, KAOHSIUNG CITY)

備註(Note)：

1. mg/kg = ppm；0.1wt% = 0.1% = 1000ppm
2. MDL = Method Detection Limit (方法偵測極限值)
3. n.d. = Not Detected (未檢出) ; 小於MDL / Less than MDL
4. "-" = Not Regulated (無規格值)
5. (#2) =
   a. 當六價鉻結果大於0.13 μg/cm²，表示樣品表層含有六價鉻。(The sample is positive for Cr(VI) if the Cr(VI) concentration is greater than 0.13 μg/cm². The sample coating is considered to contain Cr(VI).)
   b. 當六價鉻結果為n.d. (濃度小於0.10 μg/cm²)，表示表層不含六價鉻。(The sample is negative for Cr(VI) if Cr(VI) is n.d. (concentration less than 0.10 μg/cm²). The coating is considered a non-Cr(VI) based coating)
   c. 當六價鉻結果介於 0.10 及 0.13 μg/cm² 時，無法確定塗層是否含有六價鉻。(The result between 0.10 μg/cm² and 0.13 μg/cm² is considered to be inconclusive - unavoidable coating variations may influence the determination.)
6. 除非另有說明，參照ILAC-G8:09/2019，採用簡單二元(w=0)允收規則進行符合性判定；根據此規則，符合性結果之判定係以測試結果與限值做比較。(Unless otherwise stated , the decision rule for conformity reporting is based on Binary Statement for Simple Acceptance Rule (w=0) stated in ILAC-G8:09/2019. According to this rule, the judgement of conformity is based on the comparing test results with limits.)

This document is issued by the Company subject to its General Conditions of Service printed overleaf, available on request or accessible at https://www.sgs.com.tw/terms-of-service and, for electronic format documents, subject to Terms and Conditions for Electronic Documents at https://www.sgs.com.tw/terms-of-service. Attention is drawn to the limitation of liability, indemnification and jurisdiction issues defined therein. Any holder of this document is advised that information contained hereon reflects the Company's findings at the time of its intervention only and within the limits of client's instruction, if any. The Company's sole responsibility is to its Client and this document does not exonerate parties to a transaction from exercising all their rights and obligations under the transaction documents. This document cannot be reproduced, except in full, without prior written approval of the Company. Any unauthorized alteration, forgery or falsification of the content or appearance of this document is unlawful and offenders may be prosecuted to the fullest extent of the law. Unless otherwise stated the results shown in this test report refer only to the sample(s) tested.

中鋼鋁業股份有限公司 (C.S. ALUMINIUM CORPORATION)
高雄市小港區東林路17號 (NO.17 TUNG LIN ROAD ,HSIAOKANG DISTRICT, KAOHSIUNG CITY)

重金屬流程圖 / Analytical flow chart of heavy metal

根據以下的流程圖之條件，樣品已完全溶解。（六價鉻測試方法除外）
These samples were dissolved totally by pre-conditioning method according to below flow chart.
（Cr^{6+} test method excluded）

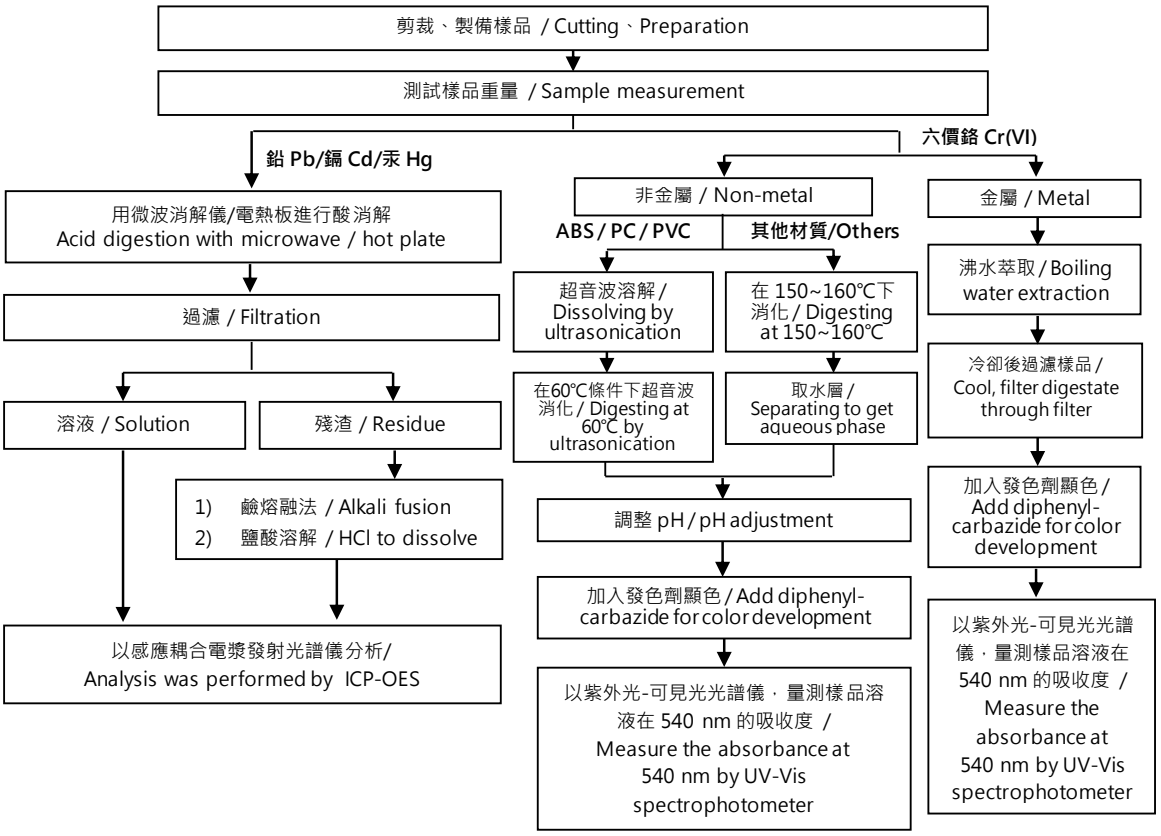

This document is issued by the Company subject to its General Conditions of Service printed overleaf, available on request or accessible at https://www.sgs.com.tw/terms-of-service and, for electronic format documents, subject to Terms and Conditions for Electronic Documents at https://www.sgs.com.tw/terms-of-service. Attention is drawn to the limitation of liability, indemnification and jurisdiction issues defined therein. Any holder of this document is advised that information contained hereon reflects the Company's findings at the time of its intervention only and within the limits of client's instruction, if any. The Company's sole responsibility is to its Client and this document does not exonerate parties to a transaction from exercising all their rights and obligations under the transaction documents. This document cannot be reproduced, except in full, without prior written approval of the Company. Any unauthorized alteration, forgery or falsification of the content or appearance of this document is unlawful and offenders may be prosecuted to the fullest extent of the law. Unless otherwise stated the results shown in this test report refer only to the sample(s) tested.

中鋼鋁業股份有限公司 (C.S. ALUMINIUM CORPORATION)
高雄市小港區東林路17號 (NO.17 TUNG LIN ROAD ,HSIAOKANG DISTRICT, KAOHSIUNG CITY)

多溴聯苯/多溴聯苯醚 分析流程圖 / PBB/PBDE analytical FLOW CHART

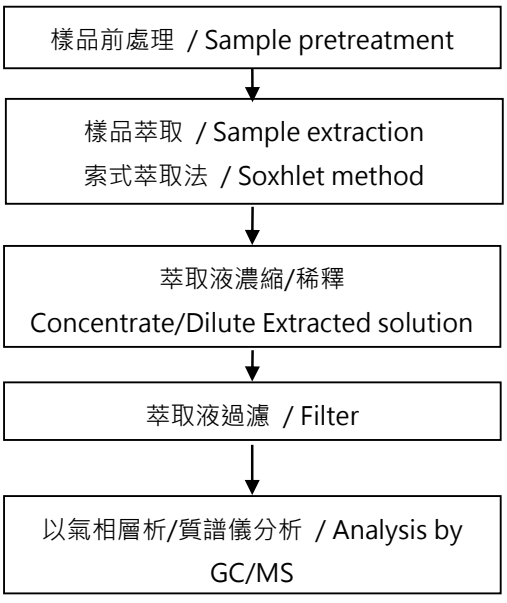

This document is issued by the Company subject to its General Conditions of Service printed overleaf, available on request or accessible at https://www.sgs.com.tw/terms-of-service and, for electronic format documents, subject to Terms and Conditions for Electronic Documents at https://www.sgs.com.tw/terms-of-service. Attention is drawn to the limitation of liability, indemnification and jurisdiction issues defined therein. Any holder of this document is advised that information contained hereon reflects the Company's findings at the time of its intervention only and within the limits of client's instruction, if any. The Company's sole responsibility is to its Client and this document does not exonerate parties to a transaction from exercising all their rights and obligations under the transaction documents. This document cannot be reproduced, except in full, without prior written approval of the Company. Any unauthorized alteration, forgery or falsification of the content or appearance of this document is unlawful and offenders may be prosecuted to the fullest extent of the law. Unless otherwise stated the results shown in this test report refer only to the sample(s) tested.

中鋼鋁業股份有限公司 (C.S. ALUMINIUM CORPORATION)
高雄市小港區東林路17號 (NO.17 TUNG LIN ROAD ,HSIAOKANG DISTRICT, KAOHSIUNG CITY)

可塑劑分析流程圖 / Analytical flow chart - Phthalate

【測試方法/Test method: IEC 62321-8】

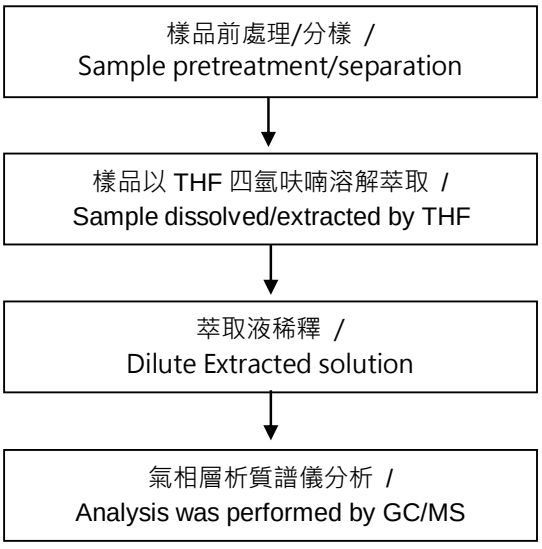

This document is issued by the Company subject to its General Conditions of Service printed overleaf, available on request or accessible at https://www.sgs.com.tw/terms-of-service and, for electronic format documents, subject to Terms and Conditions for Electronic Documents at https://www.sgs.com.tw/terms-of-service. Attention is drawn to the limitation of liability, indemnification and jurisdiction issues defined therein. Any holder of this document is advised that information contained hereon reflects the Company's findings at the time of its intervention only and within the limits of client's instruction, if any. The Company's sole responsibility is to its Client and this document does not exonerate parties to a transaction from exercising all their rights and obligations under the transaction documents. This document cannot be reproduced, except in full, without prior written approval of the Company. Any unauthorized alteration, forgery or falsification of the content or appearance of this document is unlawful and offenders may be prosecuted to the fullest extent of the law. Unless otherwise stated the results shown in this test report refer only to the sample(s) tested.

測試報告
Test Report

中鋼鋁業股份有限公司 (C.S. ALUMINIUM CORPORATION)
高雄市小港區東林路17號 (NO.17 TUNG LIN ROAD ,HSIAOKANG DISTRICT, KAOHSIUNG CITY)

*** 照片中如有箭頭標示，則表示為實際檢測之樣品/部位. ***
(The tested sample / part is marked by an arrow if it's shown on the photo.)

EKR23600176

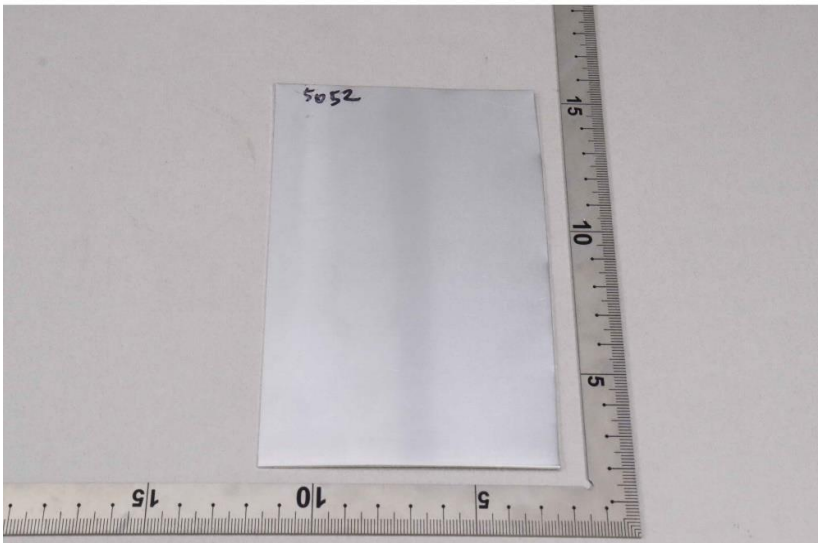

** 報告結尾 (End of Report) **

This document is issued by the Company subject to its General Conditions of Service printed overleaf, available on request or accessible at https://www.sgs.com.tw/terms-of-service and, for electronic format documents, subject to Terms and Conditions for Electronic Documents at https://www.sgs.com.tw/terms-of-service. Attention is drawn to the limitation of liability, indemnification and jurisdiction issues defined therein. Any holder of this document is advised that information contained hereon reflects the Company's findings at the time of its intervention only and within the limits of client's instruction, if any. The Company's sole responsibility is to its Client and this document does not exonerate parties to a transaction from exercising all their rights and obligations under the transaction documents. This document cannot be reproduced, except in full, without prior written approval of the Company. Any unauthorized alteration, forgery or falsification of the content or appearance of this document is unlawful and offenders may be prosecuted to the fullest extent of the law. Unless otherwise stated the results shown in this test report refer only to the sample(s) tested.