REV.	DATE	DESCRIPTION	BY	ARRD

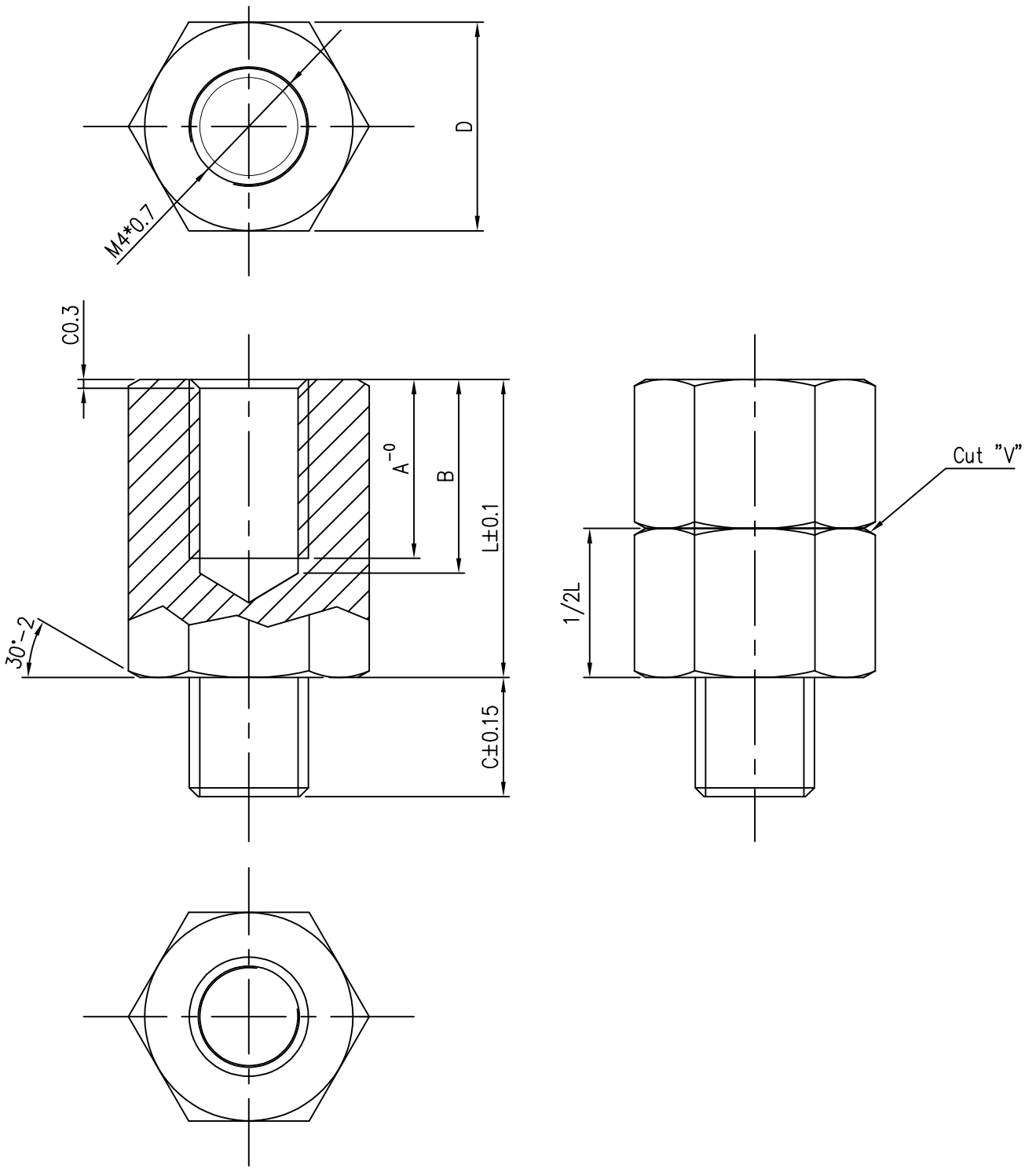

3MD664ME110	8.0	9.0	6.0	7.0	12.0	No	Brass(C6802)	Ni plated	
Part No.	A	B	C	D	L	Cut "V"	Material	Treatment	Approved No.

THIRD ANGLE PROJECTION	UNITS : mm	SCALE : FREE	SHEET : 1 / 1	MODEL NO.: COMMON	
	MATERIAL : SEE NOTES		TREATMENT : SEE NOTES		
DSGD by	Ferris Tsai	2023/09/04	PART NAME: STAND OFF (M4)		
APPD by			PART NO.: SEE NOTE	VER. 0	
APPD No. : SEE NOTE	FILE NAME : stand-off_m4		DIVA Laboratories ,Ltd.		