TMP10x Temperature Sensor With I²C and SMBus Interface with Alert Function in SOT-23 Package

1 Features

- Digital Output: SMBus™, Two-Wire, and I²C Interface Compatibility
- Resolution: 9 to 12 Bits, User-Selectable
- Accuracy:
  - ±1°C (Typical) from –55°C to 125°C
  - ±2°C (Maximum) from –55°C to 125°C
- Low Quiescent Current: 45-µA, 0.1-µA Standby
- Wide Supply Range: 2.7 V to 5.5 V
- TMP100 Features Two Address Pins
- TMP101 Features One Address Pin and an ALERT Pin
- 6-Pin SOT-23 Package

2 Applications

- Power-Supply Temperature Monitoring
- Computer Peripheral Thermal Protection
- Notebook Computers
- Cell Phones
- Battery Management
- Office Machines
- Thermostat Controls
- Environmental Monitoring and HVAC
- Electromechanical Device Temperature

3 Description

The TMP100 and TMP101 devices are digital temperature sensors ideal for negative temperature coefficient (NTC) and positive temperature coefficient (PTC) thermistor replacement. The devices offer a typical accuracy of ±1°C without requiring calibration or external component signal conditioning. Device temperature sensors are highly linear and do not require complex calculations or look-up tables to derive the temperature. The on-chip, 12-bit ADC offers resolutions down to 0.0625°C. The devices are available in 6-Pin SOT-23 packages.

The TMP100 and TMP101 devices feature SMBus, Two-Wire, and I²C interface compatibility. The TMP100 device allows up to eight devices on one bus. The TMP101 device offers an SMBus Alert function with up to three devices per bus.

The TMP100 and TMP101 devices are ideal for extended temperature measurement in a variety of communication, computer, consumer, environmental, industrial, and instrumentation applications.

The TMP100 and TMP101 devices are specified for operation over a temperature range of −55°C to 125°C.

Device Information(1)

PART NUMBER	PACKAGE	BODY SIZE (NOM)
TMP100	SOT-23 (6)	2.90 mm × 1.60 mm
TMP101	SOT-23 (6)	2.90 mm × 1.60 mm

(1) For all available packages, see the orderable addendum at the end of the data sheet.

Simplified Schematics

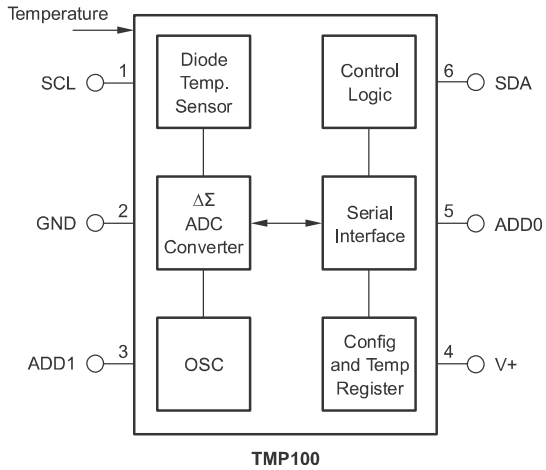

TMP100

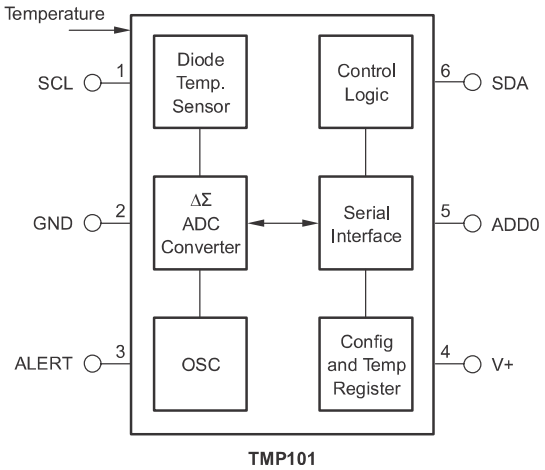

TMP101

An IMPORTANT NOTICE at the end of this data sheet addresses availability, warranty, changes, use in safety-critical applications, intellectual property matters and other important disclaimers. PRODUCTION DATA.

Table of Contents

1 Features ... 1
2 Applications ... 1
3 Description ... 1
4 Revision History ... 2
5 Pin Configuration and Functions ... 3
6 Specifications ... 4
6.1 Absolute Maximum Ratings ... 4
6.2 ESD Ratings ... 4
6.3 Recommended Operating Conditions ... 4
6.4 Thermal Information ... 4
6.5 Electrical Characteristics ... 5
6.6 Timing Requirements ... 6
6.7 Typical Characteristics ... 7
7 Detailed Description ... 8
7.1 Overview ... 8
7.2 Functional Block Diagram ... 8
7.3 Feature Description ... 9
7.4 Device Functional Modes ... 14
7.5 Programming ... 15
8 Application and Implementation ... 19
8.1 Application Information ... 19
8.2 Typical Application ... 19
9 Power Supply Recommendations ... 21
10 Layout ... 21
10.1 Layout Guidelines ... 21
10.2 Layout Examples ... 21
11 Device and Documentation Support ... 23
11.1 Related Links ... 23
11.2 Trademarks ... 23
11.3 Electrostatic Discharge Caution ... 23
11.4 Glossary ... 23
12 Mechanical, Packaging, and Orderable Information ... 23

4 Revision History

Changes from Revision H (March 2015) to Revision I — **Page**

- Changed body size values in *Device Information* table ... 1

Changes from Revision G (November 2007) to Revision H — **Page**

- Added *ESD Ratings* table, *Feature Description* section, *Device Functional Modes*, *Application and Implementation* section, *Power Supply Recommendations* section, *Layout* section, *Device and Documentation Support* section, and *Mechanical, Packaging, and Orderable Information* section. ... 1
- Changed specification values in *Timing Requirements* table ... 6

Copyright © 2002–2015, Texas Instruments Incorporated

5 Pin Configuration and Functions

DBV Package
6-Pin SOT-23
Top View

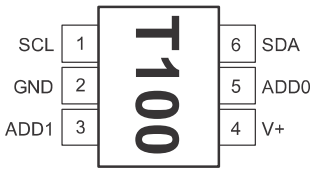

TMP100

DBV Package
6-Pin SOT-23
Top View

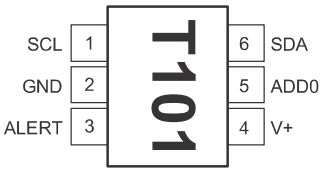

TMP101

Pin Functions

PIN			I/O	DESCRIPTION
NAME	NO.			
	TMP100	TMP101		
ADD0	5	5	I	Address select. Connect to GND, V+, or leave floating.
ADD1	3	—	I	Address select. Connect to GND, V+, or leave floating.
ALERT	—	3	O	Overtemperature alert. Open-drain output; requires a pullup resistor.
GND	2	2	—	Ground
SCL	1	1	I	Serial clock. Open-drain output; requires a pullup resistor.
SDA	6	6	I/O	Serial data. Open-drain output; requires a pullup resistor.
V+	4	4	I	Supply voltage, 2.7 V to 5.5 V

Copyright © 2002–2015, Texas Instruments Incorporated

6 Specifications

6.1 Absolute Maximum Ratings

over operating free-air temperature range (unless otherwise noted)(1)

	MIN	MAX	UNIT
Power supply, V+		7.5	V
Input voltage(2)	–0.5	7.5	V
Operating temperature	–55	125	°C
Junction temperature, T_J		150	°C
Storage temperature, T_{stg}	–60	150	°C

(1) Stresses beyond those listed under *Absolute Maximum Ratings* may cause permanent damage to the device. These are stress ratings only, which do not imply functional operation of the device at these or any other conditions beyond those indicated under *Recommended Operating Conditions*. Exposure to absolute-maximum-rated conditions for extended periods may affect device reliability.
(2) Input voltage rating applies to all TMP100 and TMP101 input voltages.

6.2 ESD Ratings

			VALUE	UNIT
$V_{(ESD)}$	Electrostatic discharge	Human body model (HBM), per ANSI/ESDA/JEDEC JS-001(1)	±2000	V
		Charged device model (CDM), per JEDEC specification JESD22-C101(2)	±200	

(1) JEDEC document JEP155 states that 500-V HBM allows safe manufacturing with a standard ESD control process.
(2) JEDEC document JEP157 states that 250-V CDM allows safe manufacturing with a standard ESD control process.

6.3 Recommended Operating Conditions

over operating free-air temperature range (unless otherwise noted)

	MIN	NOM	MAX	UNIT
Supply voltage	2.7		5.5	V
Operating free-air temperature, T_A	–55		125	°C

6.4 Thermal Information

THERMAL METRIC(1)		TMP100, TMP101 DBV (SOT-23) 6 PINS	UNIT
$R_{\theta JA}$	Junction-to-ambient thermal resistance	182.9	°C/W
$R_{\theta JC(top)}$	Junction-to-case (top) thermal resistance	115	°C/W
$R_{\theta JB}$	Junction-to-board thermal resistance	30.2	°C/W
ψ_{JT}	Junction-to-top characterization parameter	17.1	°C/W
ψ_{JB}	Junction-to-board characterization parameter	29.7	°C/W

(1) For more information about traditional and new thermal metrics, see the *IC Package Thermal Metrics* application report, SPRA953.

Copyright © 2002–2015, Texas Instruments Incorporated

6.5 Electrical Characteristics

At T_A = −55°C to 125°C and V+ = 2.7 V to 5.5 V, unless otherwise noted.

PARAMETER		TEST CONDITIONS	MIN	TYP	MAX	UNIT
TEMPERATURE INPUT						
	Range		–55		125	°C
	Accuracy (temperature error)	−25°C to 85°C		±0.5	±2	°C
		−55°C to 125°C		±1	±2	
	Accuracy (temperature error) vs supply			0.2	±0.5	°C/V
	Resolution	Selectable		0.0625		°C
DIGITAL INPUT/OUTPUT						
	Input capacitance			3		pF
V_{IH}	High-level input logic		0.7 (V+)		6	V
V_{IL}	Low-level input logic		−0.5		0.3 (V+)	V
I_{IN}	Input current	0 V ≤ V_{IN} ≤ 6 V			1	µA
V_{OL}	Low-level output logic SDA	I_{OL} = 3 mA	0	0.15	0.4	V
V_{OL}	Low-level output logic ALERT	I_{OL} = 4 mA	0	0.15	0.4	V
	Resolution	Selectable	9		12	Bits
	Conversion time	9 bits		40	75	ms
		10 bits		80	150	
		11 bits		160	300	
		12 bits		320	600	
	Conversion rate	9 bits		25		s/s
		10 bits		12		
		11 bits		6		
		12 bits		3		
POWER SUPPLY						
	Operating range		2.7		5.5	V
I_Q	Quiescent current	Serial bus inactive		45	75	µA
		Serial bus active, SCL frequency = 400 kHz		70		
		Serial bus active, SCL frequency = 3.4 MHz		150		
I_{SD}	Shutdown current	Serial bus inactive		0.1	13	µA
		Serial bus active, SCL frequency = 400 kHz		20		
		Serial bus active, SCL frequency = 3.4 MHz		100		
TEMPERATURE RANGE						
	Specified range		–55		125	°C
	Storage range		–60		150	°C

Copyright © 2002–2015, Texas Instruments Incorporated

6.6 Timing Requirements

PARAMETER		FAST MODE		HIGH-SPEED MODE		UNIT
		MIN	MAX	MIN	MAX	
$f_{(SCL)}$	SCL operating frequency		0.4		2	MHz
$t_{(BUF)}$	Bus free time between STOP and START condition	1300		160		ns
$t_{(HDSTA)}$	Hold time after repeated START condition. After this period, the first clock is generated.	600		160		ns
$t_{(SUSTA)}$	Repeated START condition setup time	600		160		ns
$t_{(SUSTO)}$	STOP condition setup time	600		160		ns
$t_{(HDDAT)}$	Data hold time	20	900	20	170	ns
$t_{(SUDAT)}$	Data setup time	100		20		ns
$t_{(LOW)}$	SCL clock LOW period	1300		360		ns
$t_{(HIGH)}$	SCL clock HIGH period	600		60		ns
t_{RC}, t_{FC}	Clock rise and fall time		300		40	ns
t_{RD}, t_{FD}	Data rise and fall time		300		170	ns

Copyright © 2002–2015, Texas Instruments Incorporated

6.7 Typical Characteristics

At T_A = 25°C and V+ = 5 V, unless otherwise noted.

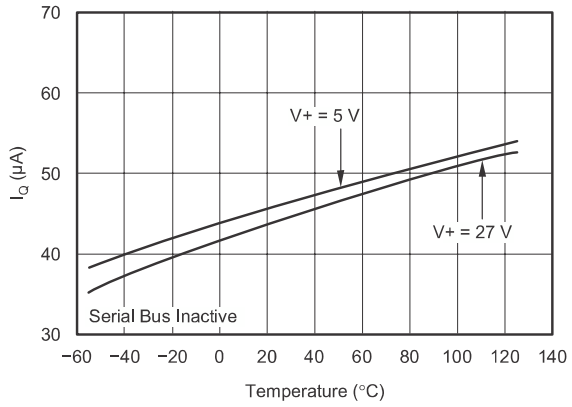

Figure 1. Quiescent Current vs Temperature

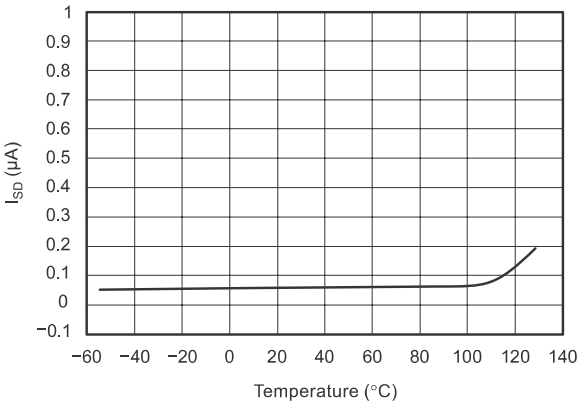

Figure 2. Shutdown Current vs Temperature

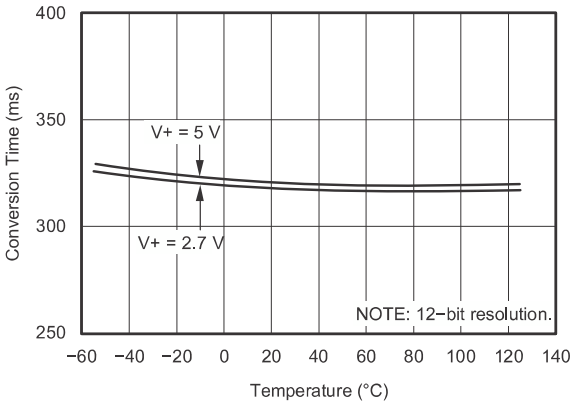

Figure 3. Conversion Time vs Temperature

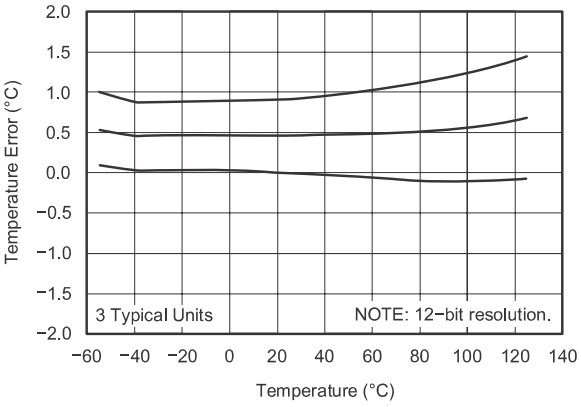

Figure 4. Temperature Accuracy vs Temperature

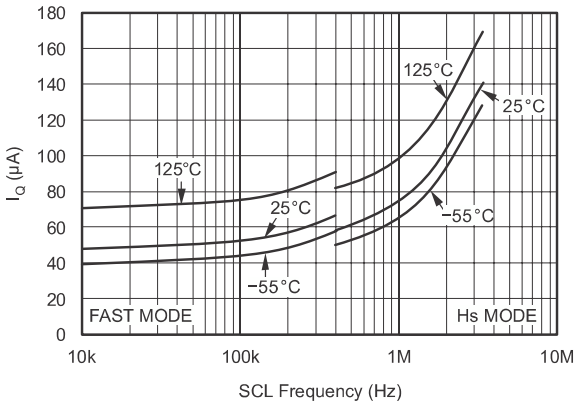

Figure 5. Quiescent Current With Bus Activity vs Temperature

Copyright © 2002–2015, Texas Instruments Incorporated

7 Detailed Description

7.1 Overview

The TMP100 and TMP101 devices are digital temperature sensors optimal for thermal management and thermal protection applications. The TMP100 and TMP101 devices are Two-Wire, SMBus, and I^2C interface-compatible. These devices are specified over a operating temperature range of −55°C to 125°C. The *Functional Block Diagram* section shows the internal block diagrams of the TMP100 and TMP101 devices.

The temperature sensor in the TMP100 and TMP101 devices is the chip itself. Thermal paths run through the package leads as well as the plastic package. The package leads provide the primary thermal path because of the lower thermal resistance of the metal. The GND pin of the TMP100 or TMP101 is directly connected to the metal lead frame, and is the best choice for thermal input.

7.2 Functional Block Diagram

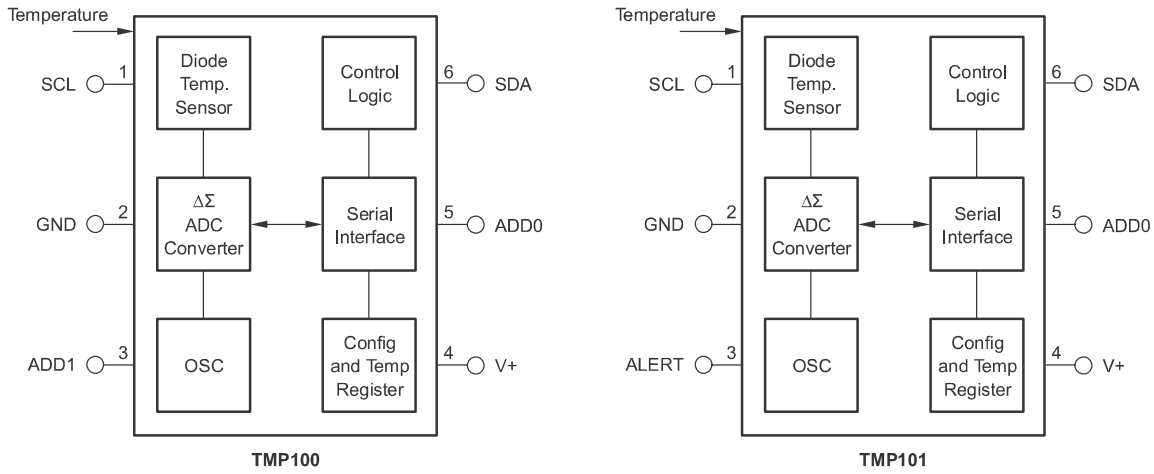

Copyright © 2002–2015, Texas Instruments Incorporated

7.3 Feature Description

7.3.1 Digital Temperature Output

The digital output from each temperature measurement conversion is stored in the read-only Temperature Register. The Temperature Register of the TMP100 or TMP101 device is a 12-bit, read-only register that stores the output of the most recent conversion. Two bytes must be read to obtain data and are listed in Table 6 and Table 7. The first 12 bits are used to indicate temperature with all the remaining bits equal to zero. The data format for temperature is listed in Table 1. Negative numbers are represented in binary twos complement format. Following power-up or reset, the temperature register reads 0°C until the first conversion is complete.

The user can obtain 9, 10, 11, or 12 bits of resolution by addressing the Configuration Register and setting the resolution bits accordingly. For 9-, 10-, or 11-bit resolution, the most significant bits (MSBs) in the Temperature Register are used with the unused least significant bits (LSBs) set to zero.

Table 1. Temperature Data Format

TEMPERATURE (°C)	DIGITAL OUTPUT	
	BINARY	HEX
128	0111 1111 1111	7FF
127.9375	0111 1111 1111	7FF
100	0110 0100 0000	640
80	0101 0000 0000	500
75	0100 1011 0000	4B0
50	0011 0010 0000	320
25	0001 1001 0000	190
0.25	0000 0000 0100	004
0	0000 0000 0000	000
–0.25	1111 1111 1100	FFC
–25	1110 0111 0000	E70
–55	1100 1001 0000	C90
–128	1000 0000 0000	800

7.3.2 Serial Interface

The TMP100 and TMP101 devices operate only as slave devices on the SMBus, Two-Wire, and I^2C interface-compatible bus. Connections to the bus are made through the open-drain I/O lines SDA and SCL. The TMP100 and TMP101 devices support the transmission protocol for fast (up to 400 kHz) and high-speed (up to 2 MHz) modes. All data bytes are transmitted MSB first.

7.3.2.1 Bus Overview

The device that initiates the transfer is called a *master*, and the devices controlled by the master are *slaves*. The bus must be controlled by a master device that generates the serial clock (SCL), controls the bus access, and generates the START and STOP conditions.

To address a specific device, a START condition is initiated, indicated by pulling the data line (SDA) from a HIGH to LOW logic level while SCL is HIGH. All slaves on the bus shift in the slave address byte, with the last bit indicating whether a read or write operation is intended. During the ninth clock pulse, the slave being addressed responds to the master by generating an Acknowledge and pulling SDA LOW.

Data transfer is then initiated and sent over eight clock pulses followed by an Acknowledge Bit. During data transfer, SDA must remain stable while SCL is HIGH because any change in SDA while SCL is HIGH is interpreted as a control signal.

When all data are transferred, the master generates a STOP condition indicated by pulling SDA from LOW to HIGH, while SCL is HIGH.

Copyright © 2002–2015, Texas Instruments Incorporated

7.3.2.2 Serial Bus Address

To program the TMP100 and TMP101 devices, the master must first address slave devices through a slave address byte. The slave address byte consists of seven address bits and a direction bit indicating the intent of executing a read or write operation.

The TMP100 device features two address pins to allow up to eight devices to be addressed on a single I^2C interface. Table 2 describes the pin logic levels used to properly connect up to eight devices. *Float* indicates the pin is left unconnected. The state of pins ADD0 and ADD1 is sampled on the first I^2C bus communication and must be set before any activity on the interface.

Table 2. Address Pins and Slave Addresses for the TMP100

ADD1	ADD0	SLAVE ADDRESS
0	0	1001000
0	Float	1001001
0	1	1001010
1	0	1001100
1	Float	1001101
1	1	1001110
Float	0	1001011
Float	1	1001111

The TMP101 device features one address pin and an ALERT pin, allowing up to three devices to be connected per bus. Pin logic levels are described in Table 3. The address pins of the TMP100 and TMP101 devices are read after reset or in response to an I^2C address acquire request. Following reading, the state of the address pins is latched to minimize power dissipation associated with detection.

Table 3. Address Pins and Slave Addresses for the TMP101

ADD0	SLAVE ADDRESS
0	1001000
Float	1001001
1	1001010

7.3.2.3 Writing and Reading to the TMP100 and TMP101

Accessing a particular register on the TMP100 and TMP101 devices is accomplished by writing the appropriate value to the Pointer Register. The value for the Pointer Register is the first byte transferred after the I^2C slave address byte with the R/$\overline{W}$ bit LOW. Every write operation to the TMP100 and TMP101 devices requires a value for the Pointer Register (see Figure 7).

When reading from the TMP100 and TMP101 devices, the last value stored in the Pointer Register by a write operation is used to determine which register is read by a read operation. To change the register pointer for a read operation, a new value must be written to the Pointer Register. This action is accomplished by issuing an I^2C slave address byte with the R/$\overline{W}$ bit LOW, followed by the Pointer Register Byte. No additional data are required. The master can then generate a START condition and send the I^2C slave address byte with the R/$\overline{W}$ bit HIGH to initiate the read command; see Figure 8 for details of this sequence. If repeated reads from the same register are desired, the Pointer Register bytes do not have to be continually sent because the TMP100 and TMP101 devices remember the Pointer Register value until that value is changed by the next write operation.

Copyright © 2002–2015, Texas Instruments Incorporated

7.3.2.4 Slave Mode Operations

The TMP100 and TMP101 devices can operate as a slave receiver or slave transmitter.

7.3.2.4.1 Slave Receiver Mode

The first byte transmitted by the master is the slave address, with the R/$\overline{W}$ bit LOW. The TMP100 or TMP101 devices then acknowledges reception of a valid address. The next byte transmitted by the master is the Pointer Register. The TMP100 or TMP101 devices then acknowledges reception of the Pointer Register byte. The next byte or bytes are written to the register addressed by the Pointer Register. The TMP100 and TMP101 devices acknowledge reception of each data byte. The master can terminate data transfer by generating a START or STOP condition.

7.3.2.4.2 Slave Transmitter Mode

The first byte is transmitted by the master and is the slave address, with the R/$\overline{W}$ bit HIGH. The slave acknowledges reception of a valid slave address. The next byte is transmitted by the slave and is the most significant byte of the register indicated by the Pointer Register. The master acknowledges reception of the data byte. The next byte transmitted by the slave is the least significant byte. The master acknowledges reception of the data byte. The master can terminate data transfer by generating a Not-Acknowledge on reception of any data byte, or generating a START or STOP condition.

7.3.2.5 SMBus Alert Function

The TMP101 device supports the SMBus Alert function. When the TMP101 device is operating in Interrupt Mode (TM = 1), the ALERT pin of the TMP101 device can be connected as an SMBus Alert signal. When a master senses that an ALERT condition is present on the ALERT line, the master sends an SMBus Alert command (00011001) on the bus. If the ALERT pin of the TMP101 device is active, the TMP101 device acknowledges the SMBus Alert command and responds by returning its slave address on the SDA line. The eighth bit (LSB) of the slave address byte indicates if the temperature exceeding T_{HIGH} or falling below T_{LOW} caused the ALERT condition. For POL = 0, this bit is LOW if the temperature is greater than or equal to THIGH. This bit is HIGH if the temperature is less than TLOW. The polarity of this bit is inverted if POL = 1; see Figure 9 for details of this sequence.

If multiple devices on the bus respond to the SMBus Alert command, arbitration during the slave address portion of the SMBus alert command determine which device clears its ALERT status. If the TMP101 device wins the arbitration, its ALERT pin becomes inactive at the completion of the SMBus Alert command. If the TMP101 loses the arbitration, its ALERT pin remains active.

The TMP100 device also responds to the SMBus ALERT command if its TM bit is set to 1. Because the device does not have an ALERT pin, the device must periodically poll the device by issuing an SMBus Alert command. If the TMP100 device generates an ALERT, the device acknowledges the SMBus Alert command and returns its slave address in the next byte.

7.3.2.6 General Call

The TMP100 and TMP101 devices respond to the I^2C General Call address (0000000) if the eighth bit is 0. The device acknowledges the General Call address and responds to commands in the second byte. If the second byte is 00000100, the TMP100 and TMP101 devices latch the status of their address pins, but do not reset. If the second byte is 00000110, the TMP100 and TMP101 devices latch the status of their address pins and reset their internal registers.

7.3.2.7 High-Speed Mode

In order for the I^2C bus to operate at frequencies above 400 kHz, the master device must issue an Hs-mode master code (00001XXX) as the first byte after a START condition to switch the bus to high-speed operation. The TMP100 and TMP101 devices do not acknowledge this byte as required by the I^2C specification, but do switch their input filters on SDA and SCL and their output filters on SDA to operate in Hs-mode, allowing transfers at up to 2 MHz. After the Hs-mode master code is issued, the master transmits an I^2C slave address to initiate a data transfer operation. The bus continues to operate in Hs-mode until a STOP condition occurs on the bus. Upon receiving the STOP condition, the TMP100 and TMP101 devices switch the input and output filter back to fast-mode operation.

Copyright © 2002–2015, Texas Instruments Incorporated

7.3.2.8 POR (Power-On Reset)

The TMP100 and TMP101 devices both have on-chip, power-on reset circuits that reset the device to default settings when the device is powered on. This circuit activates when the power supply is less than 0.3 V for more than 100 ms. If the TMP100 and TMP101 devices are powered down by removing supply voltage from the device, but the supply voltage is not assured to be less than 0.3 V, TI recommends issuing a General Call reset command on the I^2C interface bus to ensure that the TMP100 and TMP101 devices are completely reset.

7.3.3 Timing Diagrams

The TMP100 and TMP101 devices are Two-Wire, SMBUs, and I^2C interface-compatible. Figure 6 to Figure 9 describe the various operations on the TMP100 and TMP101. The following list provides bus definitions. Parameters for Figure 6 are defined in the *Timing Requirements* section.

Bus Idle: Both SDA and SCL lines remain HIGH.

Start Data Transfer: A change in the state of the SDA line, from HIGH to LOW, while the SCL line is HIGH, defines a START condition. Each data transfer is initiated with a START condition.

Stop Data Transfer: A change in the state of the SDA line from LOW to HIGH while the SCL line is HIGH defines a STOP condition. Each data transfer is terminated with a repeated START or STOP condition.

Data Transfer: The number of data bytes transferred between a START and a STOP condition is not limited and is determined by the master device. The receiver acknowledges the transfer of data.

Acknowledge: Each receiving device, when addressed, is obliged to generate an Acknowledge bit. A device that acknowledges must pull down the SDA line during the Acknowledge clock pulse in such a way that the SDA line is stable LOW during the HIGH period of the Acknowledge clock pulse. Setup and hold times must be taken into account. On a master receive, the termination of the data transfer can be signaled by the master generating a Not-Acknowledge on the last byte that is transmitted by the slave.

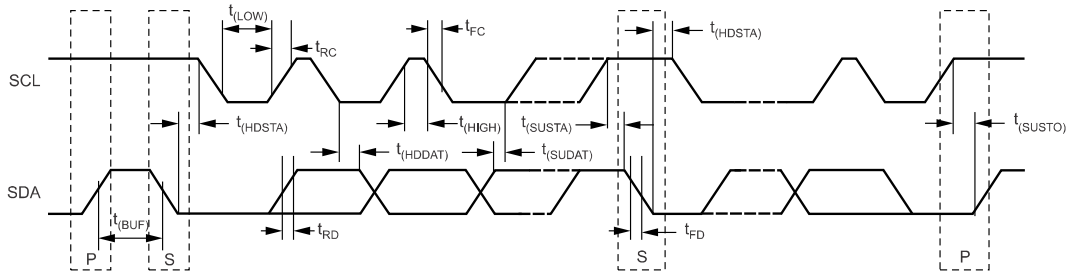

Figure 6. I^2C Timing Diagram

Copyright © 2002–2015, Texas Instruments Incorporated

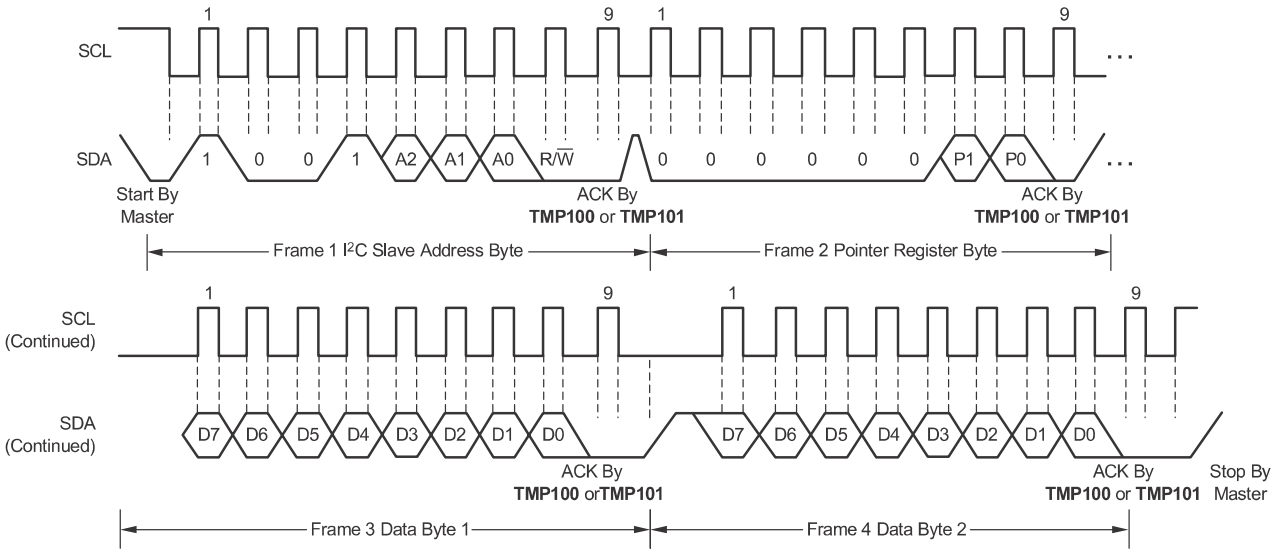

Figure 7. I²C Timing Diagram for Write Word Format

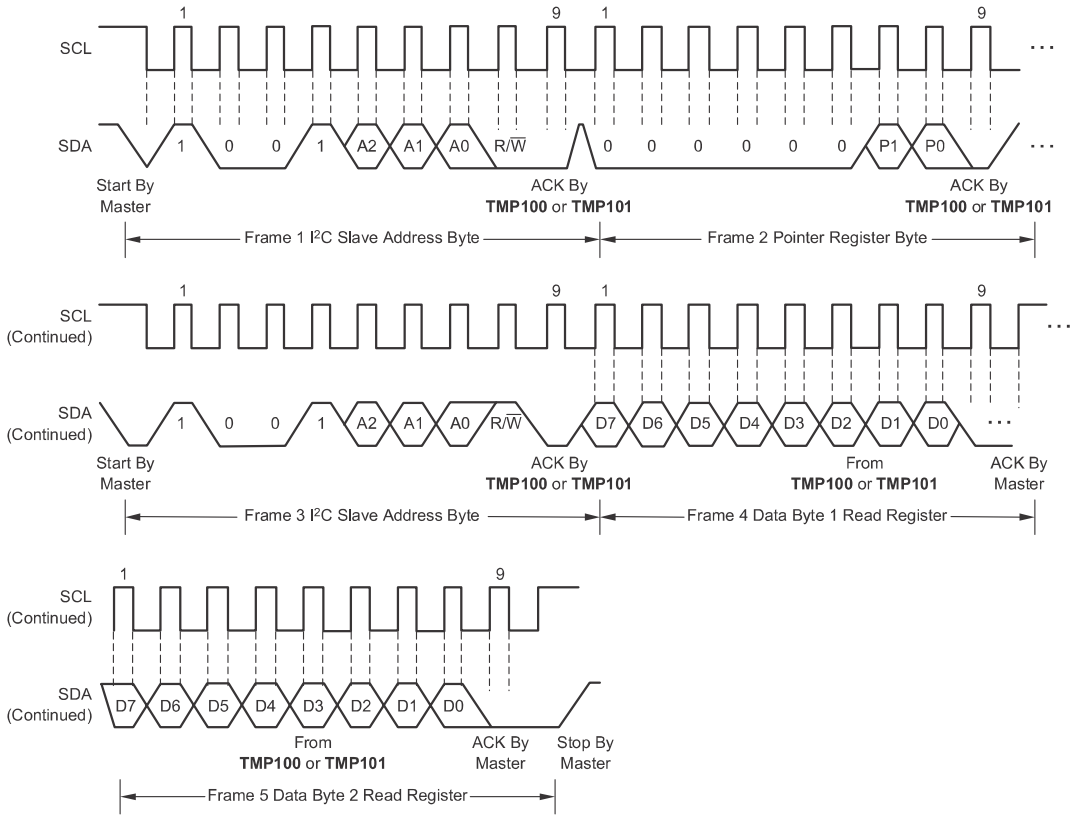

Figure 8. I²C Timing Diagram for Read Word Format

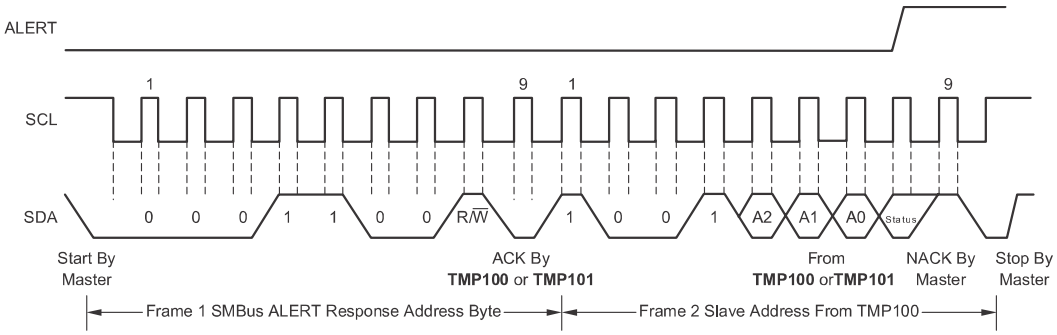

Figure 9. Timing Diagram for SMBus ALERT

7.4 Device Functional Modes

7.4.1 Shutdown Mode (SD)

The Shutdown Mode of the TMP100 and TMP101 devices lets the user save maximum power by shutting down all device circuitry other than the serial interface, which reduces current consumption to less than 1 µA. For the TMP100 and TMP101 devices, Shutdown Mode is enabled when the SD bit is 1. The device shuts down when the current conversion is completed. For SD equal to 0, the device maintains continuous conversion.

7.4.2 OS/ALERT (OS)

The TMP100 and TMP101 devices feature a One-Shot Temperature Measurement Mode. When the device is in Shutdown Mode, writing 1 to the OS/ALERT bit starts a single temperature conversion. The device returns to the shutdown state at the completion of the single conversion. This feature is useful to reduce power consumption in the TMP100 and TMP101 devices when continuous monitoring of temperature is not required.

Reading the OS/ALERT bit provides information about the Comparator Mode status. The state of the POL bit inverts the polarity of data returned from the OS/ALERT bit. For POL = 0, the OS/ALERT reads as 1 until the temperature equals or exceeds T_{HIGH} for the programmed number of consecutive faults, causing the OS/ALERT bit to read as 0. The OS/ALERT bit continues to read as 0 until the temperature falls below T_{LOW} for the programmed number of consecutive faults when the OS/ALERT bit again reads as 1. The status of the TM bit does not affect the status of the OS/ALERT bit.

7.4.3 Thermostat Mode (TM)

The Thermostat Mode bit of the TMP101 device indicates to the device whether to operate in Comparator Mode (TM = 0) or Interrupt Mode (TM = 1). For more information on comparator and interrupt modes, see the *High- and Low-Limit Registers* section.

7.4.3.1 Comparator Mode (TM = 0)

In Comparator Mode (TM = 0), the ALERT pin is activated when the temperature equals or exceeds the value in the T_{HIGH} register and remains active until the temperature falls below the value in the T_{LOW} register. For more information on the Comparator Mode, see the *High- and Low-Limit Registers* section.

7.4.3.2 Interrupt Mode (TM = 1)

In Interrupt Mode (TM = 1), the ALERT pin is activated when the temperature exceeds T_{HIGH} or goes below the T_{LOW} registers. The ALERT pin is cleared when the host controller reads the temperature register. For more information on the interrupt mode, see the *High- and Low-Limit Registers* section.

Copyright © 2002–2015, Texas Instruments Incorporated

7.5 Programming

7.5.1 Pointer Register

Figure 10 shows the internal register structure of the TMP100 and TMP101 devices. The 8-bit Pointer Register of the TMP100 and TMP101 devices is used to address a given data register. The Pointer Register uses the two LSBs to identify which of the data registers respond to a read or write command. Table 4 identifies the bits of the Pointer Register byte. Table 5 describes the pointer address of the registers available in the TMP100 and TMP101 devices. The power-up reset value of P1 and P0 is 00.

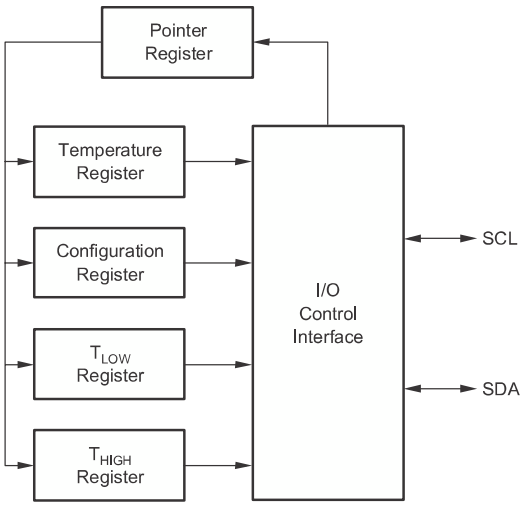

Figure 10. Internal Register Structure of the TMP100 and TMP101

7.5.1.1 Pointer Register Byte (pointer = N/A) [reset = 00h]

Table 4. Pointer Register Byte

P7	P6	P5	P4	P3	P2	P1	P0
0	0	0	0	0	0	Register Bits	

7.5.1.2 Pointer Addresses of the TMP100 and TMP101 Registers

Table 5. Pointer Addresses of the TMP100 and TMP101 Registers

P1	P0	TYPE	REGISTER
0	0	R only, default	Temperature Register
0	1	R/W	Configuration Register
1	0	R/W	T_{LOW} Register
1	1	R/W	T_{HIGH} Register

Copyright © 2002–2015, Texas Instruments Incorporated

7.5.2 Temperature Register

The Temperature Register of the TMP100 or TMP101 devices is a 12-bit, read-only register that stores the output of the most recent conversion. Two bytes must be read to obtain data, and are described in Table 6 and Table 7. The first 12 bits are used to indicate temperature, with all remaining bits equal to zero. Data format for temperature is summarized in Table 1. Following power-up or reset, the Temperature Register reads 0°C until the first conversion is complete.

Table 6. Byte 1 of the Temperature Register

D7	D6	D5	D4	D3	D2	D1	D0
T11	T10	T9	T8	T7	T6	T5	T4

Table 7. Byte 2 of the Temperature Register

D7	D6	D5	D4	D3	D2	D1	D0
T3	T2	T1	T0	0	0	0	0

7.5.3 Configuration Register

The Configuration Register is an 8-bit read and write register used to store bits that control the operational modes of the temperature sensor. Read and write operations are performed MSB-first. The format of the Configuration Register for the TMP100 and TMP101 devices is shown in Table 8, followed by a breakdown of the register bits. The power-up or reset value of the Configuration Register is all bits equal to 0. The OS/ALERT bit reads as 1 after power-up or reset value.

Table 8. Configuration Register Format

BYTE	D7	D6	D5	D4	D3	D2	D1	D0
1	OS/ALERT	R1	R0	F1	F0	POL	TM	SD

7.5.3.1 Shutdown Mode (SD)

The Shutdown Mode of the TMP100 and TMP101 devices allows the user to save maximum power by shutting down all device circuitry other than the serial interface, which reduces current consumption to less than 1 µA. For the TMP100 and TMP101 devices, Shutdown Mode is enabled when the SD bit is 1. The device shuts down when the current conversion is completed. For SD equal to 0, the device maintains continuous conversion.

7.5.3.2 Thermostat Mode (TM)

The Thermostat Mode bit of the TMP101 device indicates to the device whether to operate in Comparator Mode (TM = 0) or Interrupt Mode (TM = 1). For more information on comparator and interrupt modes, see *High- and Low-Limit Registers*.

7.5.3.3 Polarity (POL)

The Polarity bit of the TMP101 device lets the user adjust the polarity of the ALERT pin output. If the POL bit is set to 0 (default), the ALERT pin becomes active low. When the POL bit is set to 1, the ALERT pin becomes active high and the state of the ALERT pin is inverted. The operation of the ALERT pin in various modes is illustrated in Figure 11.

Copyright © 2002–2015, Texas Instruments Incorporated

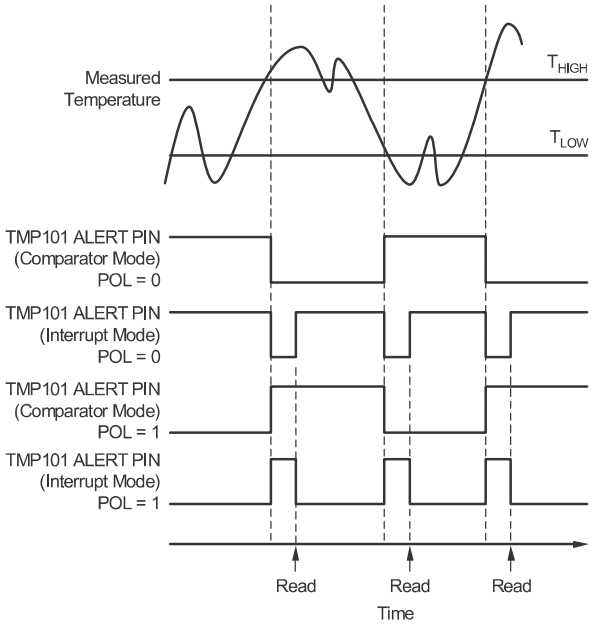

Figure 11. Output Transfer Function Diagrams

7.5.3.4 Fault Queue (F1, F0)

A fault condition occurs when the measured temperature exceeds the user-defined limits set in the T_{HIGH} and T_{LOW} Registers. Additionally, the number of fault conditions required to generate an alert can be programmed using the Fault Queue. The Fault Queue is provided to prevent a false alert resulting from environmental noise. The Fault Queue requires consecutive fault measurements in order to trigger the alert function. If the temperature falls below T_{LOW} before reaching the number of programmed consecutive faults limit, the count is reset to 0. Table 9 defines the number of measured faults that can be programmed to trigger an alert condition in the device.

Table 9. Fault Settings of the TMP100 and TMP101

F1	F0	CONSECUTIVE FAULTS
0	0	1
0	1	2
1	0	4
1	1	6

7.5.3.5 Converter Resolution (R1, R0)

The Converter Resolution bits control the resolution of the internal analog-to-digital converter (ADC), thus allowing the user to maximize efficiency by programming for higher resolution or faster conversion time. Table 10 identifies the Resolution bits and the relationship between resolution and conversion time.

Table 10. Resolution of the TMP100 and TMP101

R1	R0	RESOLUTION	CONVERSION TIME (Typical)
0	0	9 bits (0.5°C)	40 ms
0	1	10 bits (0.25°C)	80 ms
1	0	11 bits (0.125°C)	160 ms
1	1	12 bits (0.0625°C)	320 ms

Copyright © 2002–2015, Texas Instruments Incorporated

7.5.3.6 OS/ALERT (OS)

The TMP100 and TMP101 devices feature a One-Shot Temperature Measurement Mode. When the device is in Shutdown Mode, writing 1 to the OS/ALERT bit starts a single temperature conversion. The device returns to the shutdown state at the completion of the single conversion. This feature is useful to reduce power consumption in the TMP100 and TMP101 when continuous temperature monitoring is not required.

Reading the OS/ALERT bit provides information about the Comparator Mode status. The state of the POL bit inverts the polarity of data returned from the OS/ALERT bit. For POL = 0, the OS/ALERT reads as 1 until the temperature equals or exceeds T_{HIGH} for the programmed number of consecutive faults, causing the OS/ALERT bit to read as 0. The OS/ALERT bit continues to read as 0 until the temperature falls below T_{LOW} for the programmed number of consecutive faults when the OS/ALERT bit again reads as 1. The status of the TM bit does not affect the status of the OS/ALERT bit.

7.5.4 High- and Low-Limit Registers

In Comparator Mode (TM = 0), the ALERT pin of the TMP101 becomes active when the temperature equals or exceeds the value in T_{HIGH} and generates a consecutive number of faults according to fault bits F1 and F0. The ALERT pin remains active until the temperature falls below the indicated T_{LOW} value for the same number of faults.

In Interrupt Mode (TM = 1) the ALERT pin becomes active when the temperature equals or exceeds T_{HIGH} for a consecutive number of fault conditions. The ALERT pin remains active until a read operation of any register occurs or the device successfully responds to the SMBus Alert Response Address. The ALERT pin is also cleared if the device is placed in Shutdown Mode. When the ALERT pin is cleared, it only becomes active again by the temperature falling below TLOW. When the temperature falls below T_{LOW}, the ALERT pin becomes active and remains active until cleared by a read operation of any register or a successful response to the SMBus Alert Response Address. When the ALERT pin is cleared, the above cycle repeats with the ALERT pin becoming active when the temperature equals or exceeds T_{HIGH}. The ALERT pin can also be cleared by resetting the device with the General Call Reset command. This action also clears the state of the internal registers in the device, returning the device to Comparator Mode (TM = 0).

Both operational modes are represented in Figure 11. Table 11, Table 12, Table 13, and Table 14 describe the format for the T_{HIGH} and T_{LOW} registers. Power-up reset values for T_{HIGH} and T_{LOW} are: T_{HIGH} = 80°C and T_{LOW} = 75°C. The format of the data for T_{HIGH} and T_{LOW} is the same as for the Temperature Register.

Table 11. Byte 1 of the T_{HIGH} Register

D7	D6	D5	D4	D3	D2	D1	D0
H11	H10	H9	H8	H7	H6	H5	H4

Table 12. Byte 2 of the T_{HIGH} Register

D7	D6	D5	D4	D3	D2	D1	D0
H3	H2	H1	H0	0	0	0	0

Table 13. Byte 1 of the T_{LOW} Register

D7	D6	D5	D4	D3	D2	D1	D0
L11	L10	L9	L8	L7	L6	L5	L4

Table 14. Byte 2 of the T_{LOW} Register

D7	D6	D5	D4	D3	D2	D1	D0
L3	L2	L1	L0	0	0	0	0

All 12 bits for the Temperature, T_{HIGH}, and T_{LOW} registers are used in the comparisons for the ALERT function for all converter resolutions. The three LSBs in T_{HIGH} and T_{LOW} can affect the ALERT output even if the converter is configured for 9-bit resolution.

Copyright © 2002–2015, Texas Instruments Incorporated

8 Application and Implementation

NOTE

Information in the following applications sections is not part of the TI component specification, and TI does not warrant its accuracy or completeness. TI's customers are responsible for determining suitability of components for their purposes. Customers should validate and test their design implementation to confirm system functionality.

8.1 Application Information

The TMP100 and TMP101 devices are used to measure the printed circuit board (PCB) temperature of the board location where the devices are mounted. The TMP100 features two address pins to allow up to eight devices to be addressed on a single I^2C interface. The TMP101 device features one address pin and an ALERT pin, allowing up to three devices to be connected per bus. The TMP100 and TMP101 devices require no external components for operation except for pullup resistors on SCL, SDA, and ALERT (TMP101 device), although a 0.1-µF bypass capacitor is recommended.

The sensing device of the TMP100 and TMP101 devices is the chip itself. Thermal paths run through the package leads as well as the plastic package. The die flag of the lead frame is connected to GND. The lower thermal resistance of metal causes the leads to provide the primary thermal path. The GND pin of the TMP100 or TMP101 device is directly connected to the metal lead frame, and is the best choice for thermal input.

8.2 Typical Application

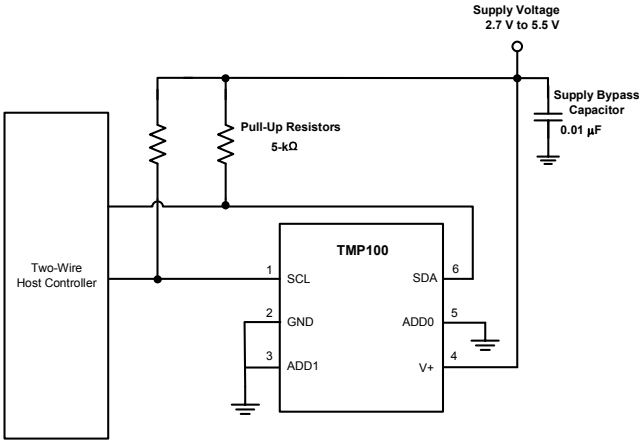

Figure 12. Typical Connections of the TMP100

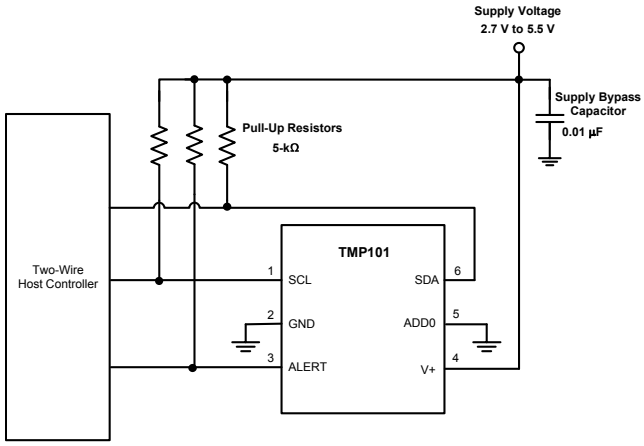

Figure 13. Typical Connections of the TMP101

8.2.1 Design Requirements

The TMP100 and TMP101 devices require pullup resistors on the SCL, SDA, and ALERT (TMP101 device) pins. The recommended value for the pullup resistor is 5-kΩ. In some applications, the pullup resistor can be lower or higher than 5-kΩ but must not exceed 3 mA of current on the SCL and SDA pins, and must not exceed 4 mA on the ALERT (TMP101) pin. A 0.1-µF bypass capacitor is recommended, as shown in Figure 12 and Figure 13. The SCL, SDA, and ALERT lines can be pulled up to a supply that is equal to or higher than V_S through the pullup resistors. For the TMP100, to configure one of eight different addresses on the bus, connect ADD0 and ADD1 to either the GND pin, V+ pin, or float. Float indicates the pin is left unconnected. For the TMP101 device, to configure one of three different addresses on the bus, connect ADD0 to either the GND pin, V+ pin, or float.

8.2.2 Detailed Design Procedure

Place the TMP100 and TMP101 devices in close proximity to the heat source that must be monitored, with a proper layout for good thermal coupling. This placement ensures that temperature changes are captured within the shortest possible time interval. To maintain accuracy in applications that require air or surface temperature measurement, care must be taken to isolate the package and leads from ambient air temperature. A thermally-conductive adhesive is helpful in achieving accurate surface temperature measurement.

Copyright © 2002–2015, Texas Instruments Incorporated

Typical Application (continued)

8.2.3 Application Curve

Figure 14 shows the step response of the TMP100 and TMP101 devices to a submersion in an oil bath of 100ºC from room temperature (27ºC). The time constant, or the time for the output to reach 63% of the input step, is 0.9 s. The time-constant result depends on the PCB that the TMP100 and TMP101 devices are mounted. For this test, the TMP100 and TMP101 devices are soldered to a two-layer PCB that measures 0.375 inch × 0.437 inch.

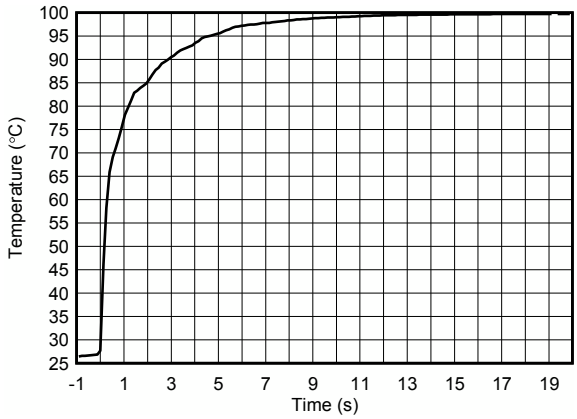

Figure 14. Temperature Step Response

Copyright © 2002–2015, Texas Instruments Incorporated

9 Power Supply Recommendations

The TMP100 and TMP101 devices operate with power supply in the range of 2.7 V to 5.5 V. A power-supply bypass capacitor is required for stability; place this capacitor as close as possible to the supply and ground pins of the device. A typical value for this supply bypass capacitor is 0.01 µF. Applications with noisy or high-impedance power supplies can require additional decoupling capacitors to reject power-supply noise.

10 Layout

10.1 Layout Guidelines

Place the power-supply bypass capacitor as close as possible to the supply and ground pins. The recommended value of this bypass capacitor is 0.01 µF. Additional decoupling capacitance can be added to compensate for noisy or high-impedance power supplies. Pull up the open-drain output pins SDA , SCL, and ALERT (TMP101) through 5-kΩ pullup resistors.

10.2 Layout Examples

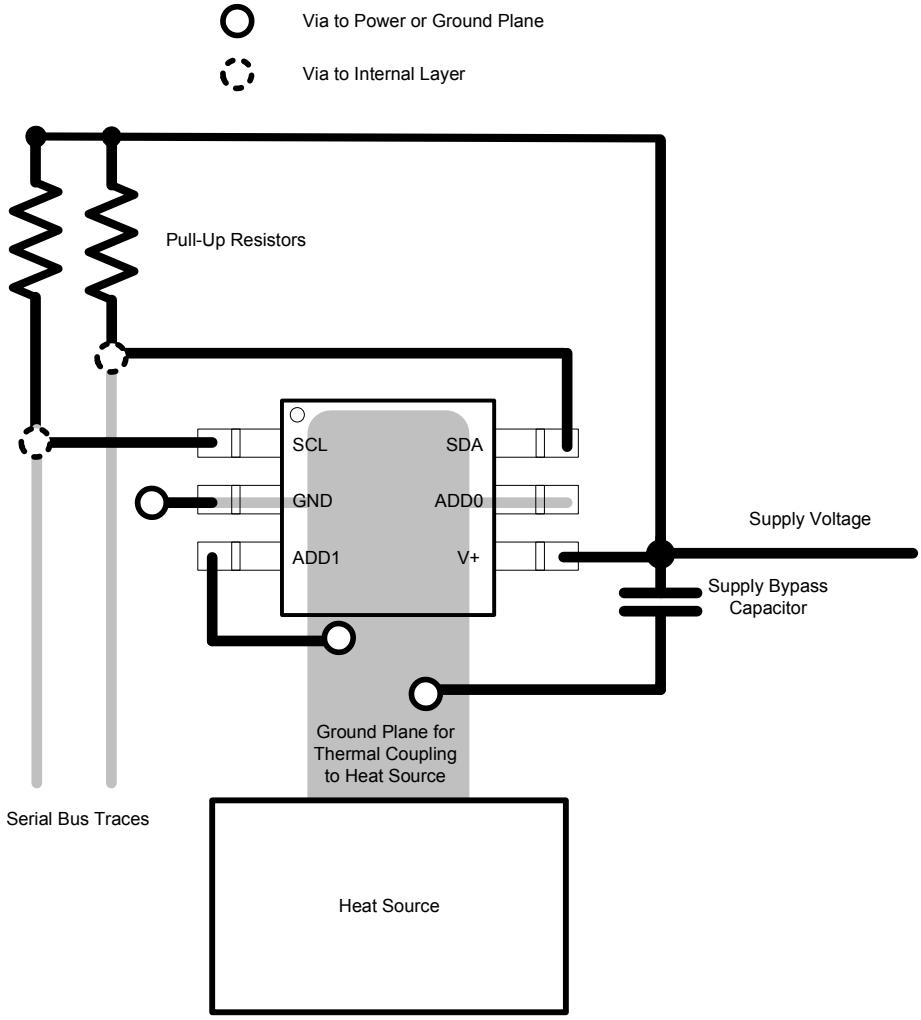

Figure 15. TMP100 Layout Example

Layout Examples (continued)

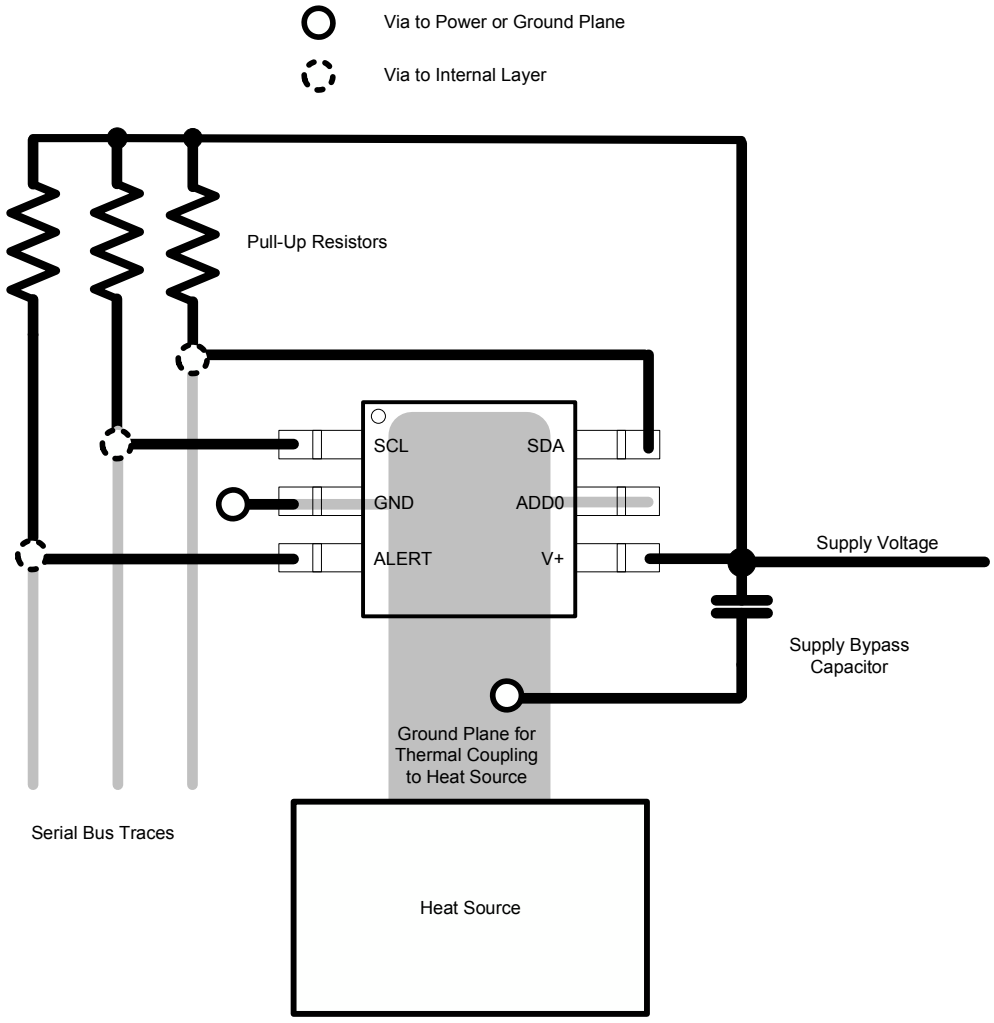

Figure 16. TMP101 Layout Example

Copyright © 2002–2015, Texas Instruments Incorporated

11 Device and Documentation Support

11.1 Related Links

The table below lists quick access links. Categories include technical documents, support and community resources, tools and software, and quick access to sample or buy.

Table 15. Related Links

PARTS	PRODUCT FOLDER	SAMPLE & BUY	TECHNICAL DOCUMENTS	TOOLS & SOFTWARE	SUPPORT & COMMUNITY
TMP100	Click here	Click here	Click here	Click here	Click here
TMP101	Click here	Click here	Click here	Click here	Click here

11.2 Trademarks

SMBus is a trademark of NXP Semiconductors.
All other trademarks are the property of their respective owners.

11.3 Electrostatic Discharge Caution



These devices have limited built-in ESD protection. The leads should be shorted together or the device placed in conductive foam during storage or handling to prevent electrostatic damage to the MOS gates.

11.4 Glossary

SLYZ022 — *TI Glossary*.

This glossary lists and explains terms, acronyms, and definitions.

12 Mechanical, Packaging, and Orderable Information

The following pages include mechanical, packaging, and orderable information. This information is the most current data available for the designated devices. This data is subject to change without notice and revision of this document. For browser-based versions of this data sheet, refer to the left-hand navigation.

Copyright © 2002–2015, Texas Instruments Incorporated

PACKAGING INFORMATION

Orderable Device	Status (1)	Package Type	Package Drawing	Pins	Package Qty	Eco Plan (2)	Lead/Ball Finish (6)	MSL Peak Temp (3)	Op Temp (°C)	Device Marking (4/5)	Samples
TMP100NA/250	ACTIVE	SOT-23	DBV	6	250	Green (RoHS & no Sb/Br)	CU NIPDAU	Level-2-260C-1 YEAR		T100	Samples
TMP100NA/250G4	ACTIVE	SOT-23	DBV	6	250	Green (RoHS & no Sb/Br)	CU NIPDAU	Level-2-260C-1 YEAR		T100	Samples
TMP100NA/3K	ACTIVE	SOT-23	DBV	6	3000	Green (RoHS & no Sb/Br)	CU NIPDAU	Level-2-260C-1 YEAR	-55 to 125	T100	Samples
TMP100NA/3KG4	ACTIVE	SOT-23	DBV	6	3000	Green (RoHS & no Sb/Br)	CU NIPDAU	Level-2-260C-1 YEAR	-55 to 125	T100	Samples
TMP101NA/250	ACTIVE	SOT-23	DBV	6	250	Green (RoHS & no Sb/Br)	CU NIPDAU	Level-2-260C-1 YEAR	-55 to 125	T101	Samples
TMP101NA/250G4	ACTIVE	SOT-23	DBV	6	250	Green (RoHS & no Sb/Br)	CU NIPDAU	Level-2-260C-1 YEAR	-55 to 125	T101	Samples
TMP101NA/3K	ACTIVE	SOT-23	DBV	6	3000	Green (RoHS & no Sb/Br)	CU NIPDAU	Level-2-260C-1 YEAR	-55 to 125	T101	Samples
TMP101NA/3KG4	ACTIVE	SOT-23	DBV	6	3000	Green (RoHS & no Sb/Br)	CU NIPDAU	Level-2-260C-1 YEAR	-55 to 125	T101	Samples

(1) The marketing status values are defined as follows:
ACTIVE: Product device recommended for new designs.
LIFEBUY: TI has announced that the device will be discontinued, and a lifetime-buy period is in effect.
NRND: Not recommended for new designs. Device is in production to support existing customers, but TI does not recommend using this part in a new design.
PREVIEW: Device has been announced but is not in production. Samples may or may not be available.
OBSOLETE: TI has discontinued the production of the device.

(2) Eco Plan - The planned eco-friendly classification: Pb-Free (RoHS), Pb-Free (RoHS Exempt), or Green (RoHS & no Sb/Br) - please check http://www.ti.com/productcontent for the latest availability information and additional product content details.
TBD: The Pb-Free/Green conversion plan has not been defined.
Pb-Free (RoHS): TI's terms "Lead-Free" or "Pb-Free" mean semiconductor products that are compatible with the current RoHS requirements for all 6 substances, including the requirement that lead not exceed 0.1% by weight in homogeneous materials. Where designed to be soldered at high temperatures, TI Pb-Free products are suitable for use in specified lead-free processes.
Pb-Free (RoHS Exempt): This component has a RoHS exemption for either 1) lead-based flip-chip solder bumps used between the die and package, or 2) lead-based die adhesive used between the die and leadframe. The component is otherwise considered Pb-Free (RoHS compatible) as defined above.
Green (RoHS & no Sb/Br): TI defines "Green" to mean Pb-Free (RoHS compatible), and free of Bromine (Br) and Antimony (Sb) based flame retardants (Br or Sb do not exceed 0.1% by weight in homogeneous material)

(3) MSL, Peak Temp. - The Moisture Sensitivity Level rating according to the JEDEC industry standard classifications, and peak solder temperature.

(4) There may be additional marking, which relates to the logo, the lot trace code information, or the environmental category on the device.

(5) Multiple Device Markings will be inside parentheses. Only one Device Marking contained in parentheses and separated by a "~" will appear on a device. If a line is indented then it is a continuation of the previous line and the two combined represent the entire Device Marking for that device.

(6) Lead/Ball Finish - Orderable Devices may have multiple material finish options. Finish options are separated by a vertical ruled line. Lead/Ball Finish values may wrap to two lines if the finish value exceeds the maximum column width.

Important Information and Disclaimer: The information provided on this page represents TI's knowledge and belief as of the date that it is provided. TI bases its knowledge and belief on information provided by third parties, and makes no representation or warranty as to the accuracy of such information. Efforts are underway to better integrate information from third parties. TI has taken and continues to take reasonable steps to provide representative and accurate information but may not have conducted destructive testing or chemical analysis on incoming materials and chemicals. TI and TI suppliers consider certain information to be proprietary, and thus CAS numbers and other limited information may not be available for release.

In no event shall TI's liability arising out of such information exceed the total purchase price of the TI part(s) at issue in this document sold by TI to Customer on an annual basis.

OTHER QUALIFIED VERSIONS OF TMP100, TMP101 :

- Automotive: TMP101-Q1
- Enhanced Product: TMP100-EP

NOTE: Qualified Version Definitions:

- Automotive - Q100 devices qualified for high-reliability automotive applications targeting zero defects
- Enhanced Product - Supports Defense, Aerospace and Medical Applications

TAPE AND REEL INFORMATION

REEL DIMENSIONS

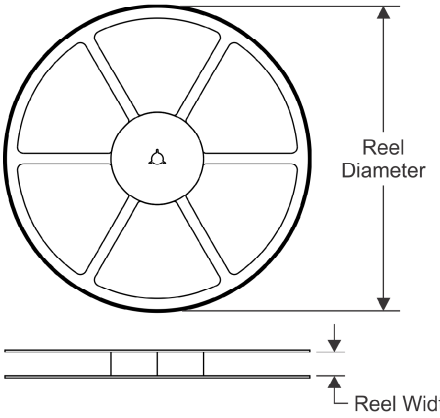

TAPE DIMENSIONS

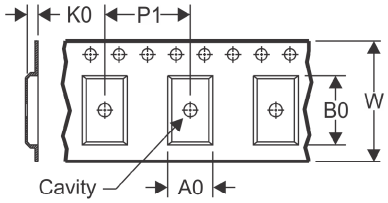

A0	Dimension designed to accommodate the component width
B0	Dimension designed to accommodate the component length
K0	Dimension designed to accommodate the component thickness
W	Overall width of the carrier tape
P1	Pitch between successive cavity centers

QUADRANT ASSIGNMENTS FOR PIN 1 ORIENTATION IN TAPE

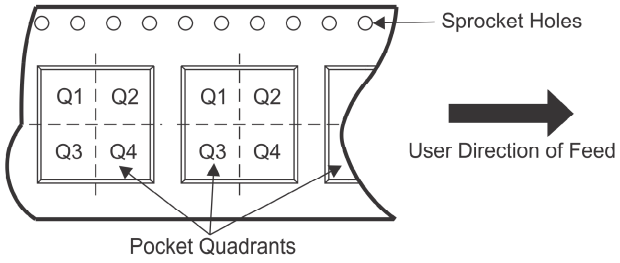

*All dimensions are nominal

Device	Package Type	Package Drawing	Pins	SPQ	Reel Diameter (mm)	Reel Width W1 (mm)	A0 (mm)	B0 (mm)	K0 (mm)	P1 (mm)	W (mm)	Pin1 Quadrant
TMP100NA/250	SOT-23	DBV	6	250	178.0	9.0	3.23	3.17	1.37	4.0	8.0	Q3
TMP100NA/3K	SOT-23	DBV	6	3000	178.0	9.0	3.23	3.17	1.37	4.0	8.0	Q3

TAPE AND REEL BOX DIMENSIONS

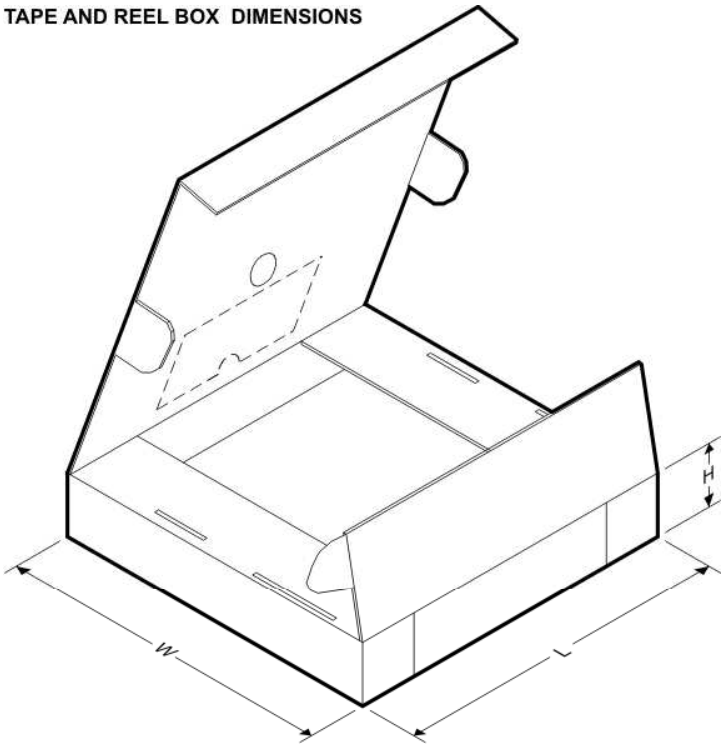

*All dimensions are nominal

Device	Package Type	Package Drawing	Pins	SPQ	Length (mm)	Width (mm)	Height (mm)
TMP100NA/250	SOT-23	DBV	6	250	180.0	180.0	18.0
TMP100NA/3K	SOT-23	DBV	6	3000	180.0	180.0	18.0

DBV (R–PDSO–G6) PLASTIC SMALL–OUTLINE PACKAGE

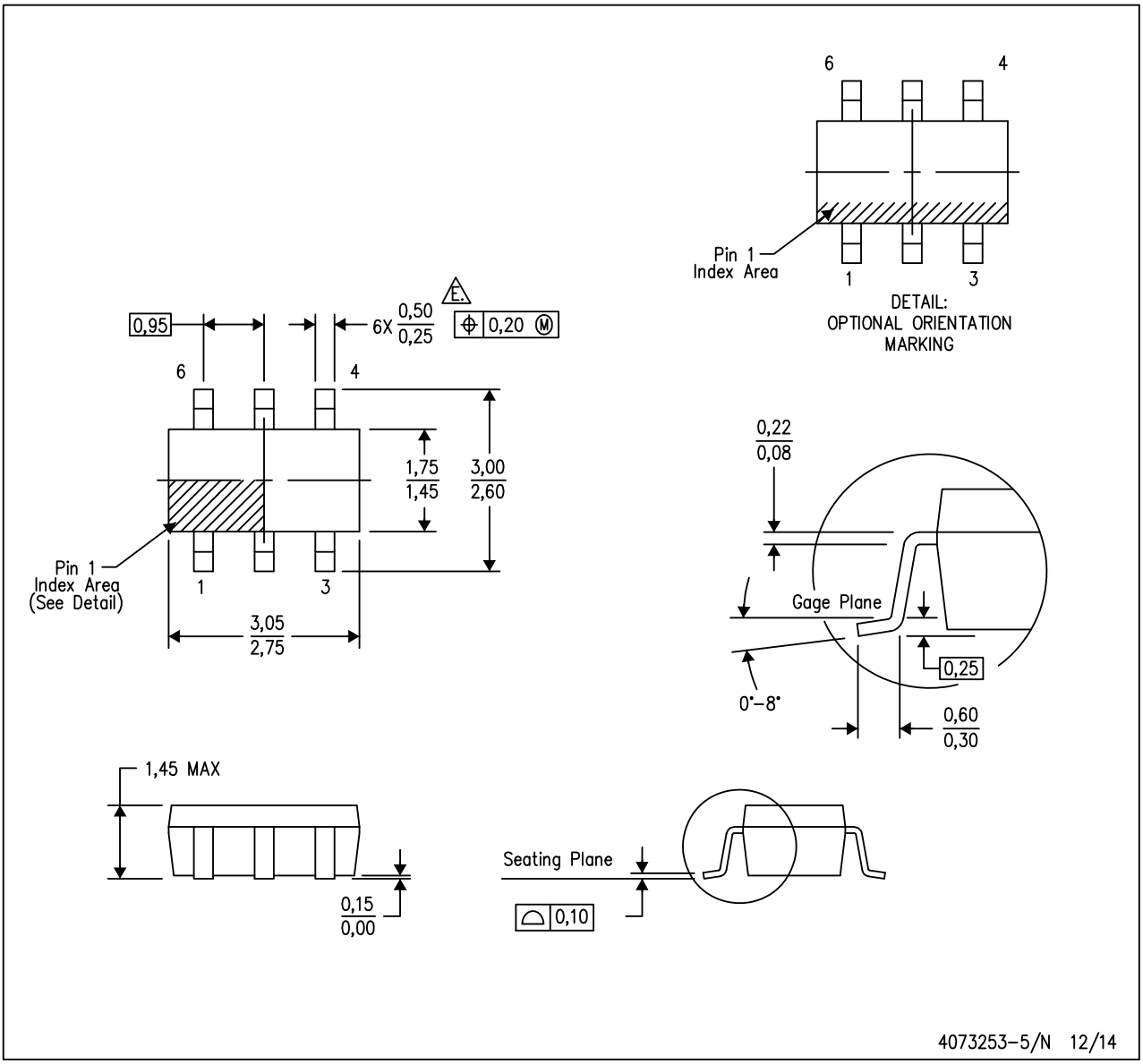

NOTES:
A. All linear dimensions are in millimeters.
B. This drawing is subject to change without notice.
C. Body dimensions do not include mold flash or protrusion. Mold flash and protrusion shall not exceed 0.15 per side.
D. Leads 1,2,3 may be wider than leads 4,5,6 for package orientation.
E. Falls within JEDEC MO–178 Variation AB, except minimum lead width.

DBV (R–PDSO–G6) PLASTIC SMALL OUTLINE

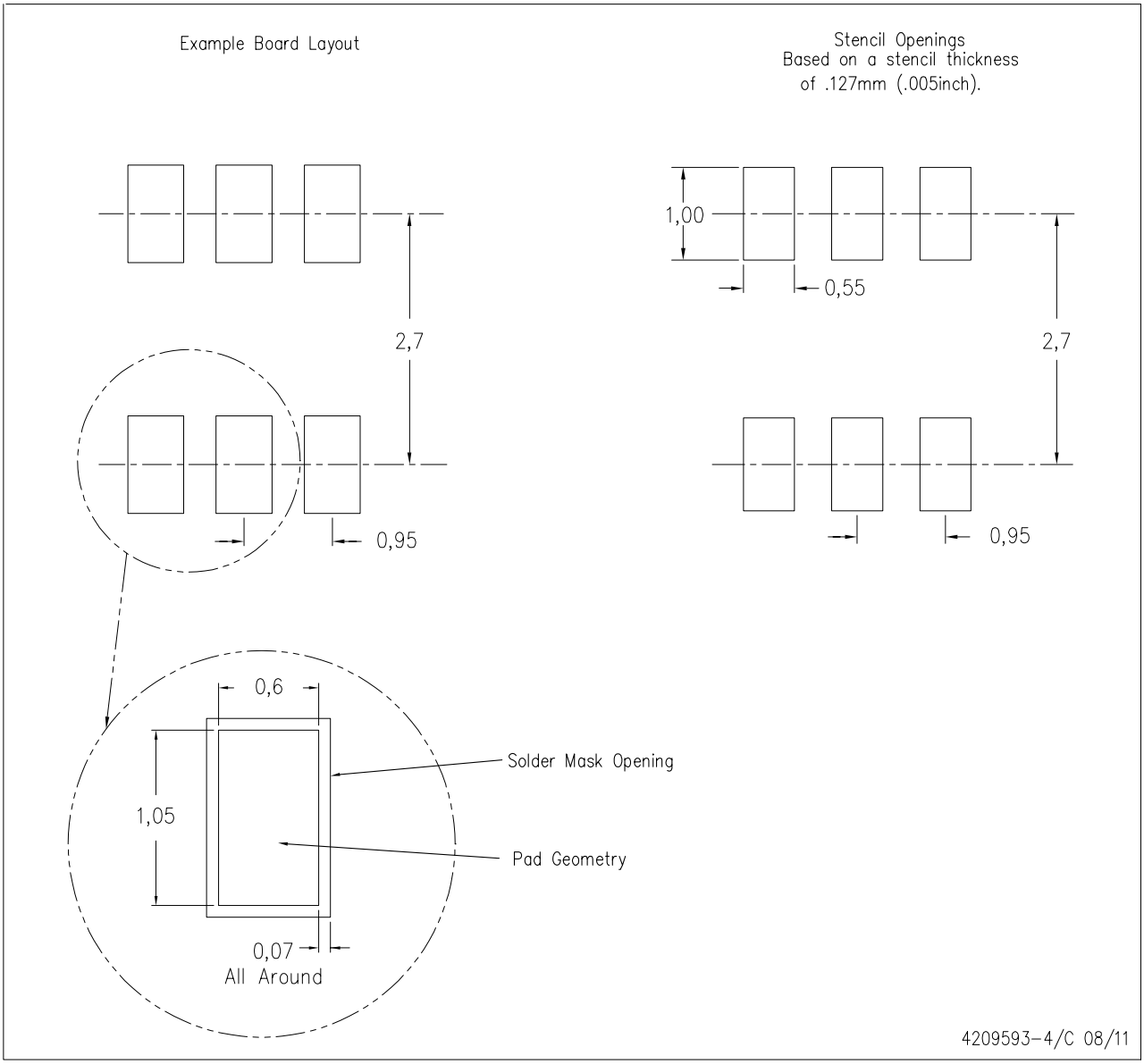

NOTES:
A. All linear dimensions are in millimeters.
B. This drawing is subject to change without notice.
C. Customers should place a note on the circuit board fabrication drawing not to alter the center solder mask defined pad.
D. Publication IPC–7351 is recommended for alternate designs.
E. Laser cutting apertures with trapezoidal walls and also rounding corners will offer better paste release. Customers should contact their board assembly site for stencil design recommendations. Example stencil design based on a 50% volumetric metal load solder paste. Refer to IPC–7525 for other stencil recommendations.

IMPORTANT NOTICE

Texas Instruments Incorporated and its subsidiaries (TI) reserve the right to make corrections, enhancements, improvements and other changes to its semiconductor products and services per JESD46, latest issue, and to discontinue any product or service per JESD48, latest issue. Buyers should obtain the latest relevant information before placing orders and should verify that such information is current and complete. All semiconductor products (also referred to herein as “components”) are sold subject to TI’s terms and conditions of sale supplied at the time of order acknowledgment.

TI warrants performance of its components to the specifications applicable at the time of sale, in accordance with the warranty in TI’s terms and conditions of sale of semiconductor products. Testing and other quality control techniques are used to the extent TI deems necessary to support this warranty. Except where mandated by applicable law, testing of all parameters of each component is not necessarily performed.

TI assumes no liability for applications assistance or the design of Buyers’ products. Buyers are responsible for their products and applications using TI components. To minimize the risks associated with Buyers’ products and applications, Buyers should provide adequate design and operating safeguards.

TI does not warrant or represent that any license, either express or implied, is granted under any patent right, copyright, mask work right, or other intellectual property right relating to any combination, machine, or process in which TI components or services are used. Information published by TI regarding third-party products or services does not constitute a license to use such products or services or a warranty or endorsement thereof. Use of such information may require a license from a third party under the patents or other intellectual property of the third party, or a license from TI under the patents or other intellectual property of TI.

Reproduction of significant portions of TI information in TI data books or data sheets is permissible only if reproduction is without alteration and is accompanied by all associated warranties, conditions, limitations, and notices. TI is not responsible or liable for such altered documentation. Information of third parties may be subject to additional restrictions.

Resale of TI components or services with statements different from or beyond the parameters stated by TI for that component or service voids all express and any implied warranties for the associated TI component or service and is an unfair and deceptive business practice. TI is not responsible or liable for any such statements.

Buyer acknowledges and agrees that it is solely responsible for compliance with all legal, regulatory and safety-related requirements concerning its products, and any use of TI components in its applications, notwithstanding any applications-related information or support that may be provided by TI. Buyer represents and agrees that it has all the necessary expertise to create and implement safeguards which anticipate dangerous consequences of failures, monitor failures and their consequences, lessen the likelihood of failures that might cause harm and take appropriate remedial actions. Buyer will fully indemnify TI and its representatives against any damages arising out of the use of any TI components in safety-critical applications.

In some cases, TI components may be promoted specifically to facilitate safety-related applications. With such components, TI’s goal is to help enable customers to design and create their own end-product solutions that meet applicable functional safety standards and requirements. Nonetheless, such components are subject to these terms.

No TI components are authorized for use in FDA Class III (or similar life-critical medical equipment) unless authorized officers of the parties have executed a special agreement specifically governing such use.

Only those TI components which TI has specifically designated as military grade or “enhanced plastic” are designed and intended for use in military/aerospace applications or environments. Buyer acknowledges and agrees that any military or aerospace use of TI components which have ***not*** been so designated is solely at the Buyer's risk, and that Buyer is solely responsible for compliance with all legal and regulatory requirements in connection with such use.

TI has specifically designated certain components as meeting ISO/TS16949 requirements, mainly for automotive use. In any case of use of non-designated products, TI will not be responsible for any failure to meet ISO/TS16949.

Products		**Applications**	
Audio	www.ti.com/audio	Automotive and Transportation	www.ti.com/automotive
Amplifiers	amplifier.ti.com	Communications and Telecom	www.ti.com/communications
Data Converters	dataconverter.ti.com	Computers and Peripherals	www.ti.com/computers
DLP® Products	www.dlp.com	Consumer Electronics	www.ti.com/consumer-apps
DSP	dsp.ti.com	Energy and Lighting	www.ti.com/energy
Clocks and Timers	www.ti.com/clocks	Industrial	www.ti.com/industrial
Interface	interface.ti.com	Medical	www.ti.com/medical
Logic	logic.ti.com	Security	www.ti.com/security
Power Mgmt	power.ti.com	Space, Avionics and Defense	www.ti.com/space-avionics-defense
Microcontrollers	microcontroller.ti.com	Video and Imaging	www.ti.com/video
RFID	www.ti-rfid.com		
OMAP Applications Processors	www.ti.com/omap	**TI E2E Community**	e2e.ti.com
Wireless Connectivity	www.ti.com/wirelessconnectivity		

Mailing Address: Texas Instruments, Post Office Box 655303, Dallas, Texas 75265
Copyright © 2015, Texas Instruments Incorporated

Texas Instruments Inc. Downloaded on 11/22/2015

Details for
"TMP100NA/25
0"

Current Product Information

TI part number	Lead/ball finish	Planned lead/ball finish	MSL / reflow ratings	Assembly site	ackage | pin	Package body size (WxLxH) mm	Total device mass (mg)
TMP100NA/250	CU NIPDAU		Level-2-260C-1	Ext-Mfg	DBV | 6	2.9x1.6x1.45	17.961941

Environmental Ratings Information

Part number type	RoHS & high-temp compliant	Pb-free(RoHS) conversion date	Pb-free(RoHS) available supply date	JIG material content compliance	Green compliant	Green conversion date	Green available supply date
Std	Y	01-Dec-2004 (DC 0449)	UNASSIGNED		Y	01-Dec-2004 (DC 0449)	UNASSIGNED

Component Information

				Homogeneous Material Level		Component Level	
Component	Substance	CAS Number	Amount (mg)	Percentage %	ppm	Percentage %	ppm
Bond Wire							
Precious Metals	Gold	7440-57-5	0.038324	100	1000000	0.2129	2129

Sub-Total			**0.038324**	**100**	**1000000**	**0.2129**	**2129**
Die Attach Adhesive							
Precious Metals	Silver	7440-22-4	0.149805	80.0001	800001	0.8322	8322
Thermoplastics	Epoxy	85954-11-6	0.037451	19.9999	199998	0.2081	2080
Sub-Total			**0.187256**	**100**	**1000000**	**1.0403**	**10402**
Lead Frame							
Copper and Its Alloys	Copper	7440-50-8	5.943993	97.4425	974424	33.0222	330221
Copper and Its Alloys	Iron	7439-89-6	0.14335	2.35	23499	0.7964	7963
Copper and Its Alloys	Phosphorus	7723-14-0	0.005033	0.0825	825	0.028	279
Zinc and Its Alloys	Zinc	7440-66-6	0.007625	0.125	1249	0.0424	423
Sub-Total			**6.100001**	**100**	**1000000**	**33.8889**	**338886**
Lead Frame Plating							
Nickel and Its Alloys	Nickel	7440-02-0	0.09512	95.12	951199	0.5284	5284
Precious Metals	Gold	7440-57-5	0.00078	0.78	7799	0.0043	43
Precious Metals	Palladium	7440-05-3	0.0041	4.1	41000	0.0228	227
Sub-Total			**0.1**	**100**	**1000000**	**0.5556**	**5554**
Mold Compound							
Other Inorganic Materials	Fused Silica	60676-86-0, 14464-46-1	9.571821	86	860000	53.1768	531767
Other Plastics and Rubber	Carbon Black	1333-86-4	0.05565	0.5	4999	0.3092	3091
Thermoplastics	Epoxy	85954-11-6	1.502553	13.5	134999	8.3475	83475
Sub-Total			**11.130024**	**100**	**1000000**	**61.8335**	**618333**
Semiconductor Device							

Ceramics / Glass	Doped Silicon	7440-21-3	0.406336	100	1000000	2.2574	22574
Sub-Total			**0.406336**	**100**	**1000000**	**2.2574**	**22574**
Total			**17.961941**			**100**	**1000000**

Important Note

The ppm calculations are at the **homogeneous material** level and are maximum concentration values. The ppm displayed represents the **homogeneous material** with the for that substance. The amount (mg) calculations represent the maximum total amount of each substance within the component.
The ppm calculations are at the **component** level and are average concentration values. The amount (mg) calculations represent the average total amount of each substar
See Glossary of Terms for more details.

Important Part Information

There is a remote possibility the Customer Part Number (CPN) your company uses could reference more than one TI part number. This is due to two or more users (EMSIs or subcontractors) using the same CPN for different TI part numbers. If this occurs, please check your Customer Part Number and cross

Product Content Methodology

For an explanation of the methods used to determine material weights, SeeProduct Content Methodology.

Material Declaration Certificate for Semiconductor IC Packaged Products

TI certifies that the material content information provided by TI is representative and accurate to the best of their knowledge based on material information provided by its suppliers and their combination into finished IC packaged products. TI semiconductor products designated to be "Pb-free", "Green" or "RoHS Exempt" fully meets the latest EU

TI bases its material content knowledge on information provided by third parties and has taken and continues to take reasonable steps to provide representative and accurate information, but may not have conducted destructive testing or chemical analysis on incoming materials and chemicals. TI and TI suppliers consider certain information to be proprietary, and thus CAS numbers and other limited information may not be available for release. TI's standard warranty and limitation of liability provisions of Standard Terms and Conditions (available at

Signature: (click here for a fuller statement with a signed

Name/Title:Robert Furtaw, Vice President, Worldwide SC

Date:Downloaded on 11/22/2015

Pb-Free: TI defines "Pb-Free" or "RoHS Compliant" to mean semiconductor products that are compliant with the current RoHS requirements for all 6 substances, including the requirement that lead not exceed 0.1% by weight in homogeneous

RoHS Exempt: TI defines "RoHS Exempt" to mean products that contain lead but are compliant with RoHS pursuant to

Green: TI defines "Green" to mean Pb-Free/RoHS Compliant and free of Bromine (Br) and Antimony (Sb) based flame retardants (Br or Sb do not exceed 0.1% by weight in homogeneous mold compound material). To satisfy customer requests, efforts through early 2Q09 are being made to verify that all non-metal homogeneous material contained in TI

highest ppm

ıce within the component.

Statement on REACH Articles Provisions from Texas Instruments, Integrated Circuit Products

This document outlines Texas Instruments (TI)'s current understanding of obligations for communication of substances of very high concern in articles and disclosure of TI's actions to appropriately address such requirements.

With regard to the Substances of Very High Concern (SVHC) candidate list published on the European Chemicals Agency (ECHA) website, based on information from our suppliers and internal chemical screening processes *TI products do not contain any of the SVHC candidates listed herein above the regulatory threshold of 0.1% in TI Integrated Circuit (IC) devices or development vehicles such as evaluation modules*. TI is currently engaging with its suppliers to obtain additional information and assurances. As the ECHA SVHC list is updated, TI will provide information to its customers in a timely manner concerning their use or non-use within finished IC products through TI's product content data base (www.ti.com/ecoinfo).
In the past, TI used Cobalt Dichloride ($CoCl_2$) (CAS #7646-79-9) at a concentration of approximately 0.15% to detect humidity in our product packaging. TI no longer uses $CoCl_2$ but some of the product we have in our distribution centers may still contain this chemical. The boxes of TI product that contain a $CoCl_2$ HIC card are marked to identify this substance. In some of TI's Bill of Materials descriptions Boron trioxide (B_2O_3) (CAS #1303-86-2) will be used as a component of glass. The use of B_2O_3 is as a chemical intermediate to make glass and is therefore not an SVHC.

The following list of SVHC candidates was last updated by ECHA on June 15, 2015.

Initial: REACH Candidate List on 28 October 2008			
Substance Category Name	**CAS number(s) published by ECHA**	**EC number**	**Identification as a Basic SVHC**
Triethyl arsenate	15606-95-8	427-700-2	Carcinogenic, article 57a
Sodium dichromate, dihydrate	7789-12-0, 10588-01-9	234-190-3	Carcinogenic, mutagenic and toxic for reproduction, article 57a, 57b & 57c
Lead hydrogen arsenate	7784-40-9	232-064-2	Carcinogenic and toxic for reproduction, article 57a & 57c
Hexabromocyclododecane (HBCDD) and all major diastereoisomers	25637-99-4, 3194-55-6, 134237-50-6, 134237-51-7, 134237-52-8	247-148-4 221-695-9	PBT, article 57d
Dibutyl phthalate (DBP)	84-74-2	201-557-4	Toxic for reproduction, article 57c
Diarsenic trioxide	1327-53-3	215-481-4	Carcinogenic, article 57a
Diarsenic pentoxide	1303-28-2	215-116-9	Carcinogenic, article 57a
Tributyl tin oxide (TBTO)	56-35-9	200-268-0	PBT, article 57d
Bis (2-ethylhexyl) phthalate (DEHP)	117-81-7	204-211-0	Toxic for reproduction, article 57c *Also Included on REACH SVHC List 2014/12/17*
Benzyl butyl phthalate (BBP)	85-68-7	201-622-7	Toxic for reproduction, article 57c
Anthracene	120-12-7	204-371-1	PBT, article 57d
Alkanes, Shortchain Chlorinated Paraffins (C10 - C13)	85535-84-8	287-476-5	PBT and vPvB, article 57d & e
5-tert-butyl-2,4,6-trinitro-m-xylene	81-15-2	201-329-4	vPvB, article 57e
4,4'- Diaminodiphenylmethane	101-77-9	202-974-4	Carcinogenic, article 57a
Cobalt dichloride (CoCl2)	7646-79-9	231-589-4	Carcinogenic and toxic for reproduction, article

			57a & 57c *Also Included on REACH SVHC List 2011/06/20*
Update: REACH Candidate List on 13 January 2010			
Tris (2-chloroethyl) phosphate (TCEP)	115-96-8	204-118-5	Toxic for reproduction, article 57c
Coal tar pitch, high temperature	65996-93-2	266-028-2	Carcinogenic, PBT and vPvB, articles a, d & e
Lead sulfochromate yellow (C.I. Pigment Yellow 34)	1344-37-2	215-693-7	Carcinogenic, toxic for reproduction, article 57a & 57c
Lead chromate molybdate sulfate red (C.I. Pigment Red 104)	12656-85-8	235-759-9	Carcinogenic and toxic for reproduction, article 57a & 57c
Lead chromate	7758-97-6	231-846-0	Carcinogenic and toxic for reproduction, article 57a & 57c
Diisobutyl phthalate (DIBP)	84-69-5	201-553-2	Toxic for reproduction, article 57c
Anthracene oil, anthracene paste, distn. Lights	91995-17-4	295-278-5	Carcinogenic, Mutagenic, PBT and vPvB, articles a, b, d & e
Anthracene oil, anthracene paste, anthracene fraction	91995-15-2	295-275-9	Carcinogenic, Mutagenic, PBT and vPvB, articles a, b, d & e
Anthracene oil, anthracene paste	90640-81-6	292-603-2	Carcinogenic, Mutagenic, PBT and vPvB, articles a, b, d & e
Anthracene oil, anthracene-low	90640-82-7	292-604-8	Carcinogenic, Mutagenic, PBT and vPvB, articles a, b, d & e
Anthracene oil	90640-80-5	292-602-7	Carcinogenic, PBT and vPvB, articles a, d & e
2,4-Dinitrotoluene	121-14-2	204-450-0	Carcinogenic, article 57a
Update: REACH Candidate List on 30 March 2010			
Acrylamide	79-06-1	201-173-7	Carcinogenic and mutagenic, article 57a & 57b
Update: REACH Candidate List on 18 June 2010			
Sodium chromate	7775-11-3	231-889-5	Carcinogenic, mutagenic and toxic for reproduction, article 57a, 57b & 57c
Potassium chromate	7789-00-6	232-140-5	Carcinogenic, mutagenic, article 57a & 57b
Ammonium dichromate	7789-09-5	232-143-1	Carcinogenic, mutagenic and toxic for reproduction, article 57a, 57b & 57c
Potassium dichromate	7778-50-9	231-906-6	Carcinogenic, mutagenic and toxic for reproduction, article 57a, 57b & 57c
Tetraboron disodium heptaoxide, hydrate	12267-73-1	235-541-3	Toxic for reproduction, article 57c
Disodium tetraborate, anhydrous	1303-96-4, 1330-43-4, 12179-04-3	215-540-4	Toxic for reproduction, article 57c
Boric acid	10043-35-3, 11113-50-1	233-139-2, 234-343-4	Toxic for reproduction, article 57c
Trichloroethylene	79-01-6	201-167-4	Carcinogenic, article 57a
Update: REACH Candidate List on 15 December 2010:			
Chromium Trioxide	1333-82-0	215-607-8	Carcinogenic and mutagenic, article 57a & 57b

Acids generated from chromium trioxide and their oligomers. *Names of the acids and their oligomers: Chromic acid, Dichromic acid, Oligomers of chromic acid and dichromic acid.*	7738-94-5, 13530-68-2	231-801-5, 236-881-5	Carcinogenic, article 57a
2-Ethoxyethanol	110-80-5	203-804-1	Toxic for reproduction, article 57c
2-Methoxyethanol	109-86-4	203-713-7	Toxic for reproduction, article 57c
Cobalt(II) Diacetate	71-48-7	200-755-8	Carcinogenic and toxic for reproduction, article 57a & 57C
Cobalt(II) Carbonate	513-79-1	208-169-4	Carcinogenic and toxic for reproduction, article 57a & 57C
Cobalt(II) Dinitrate	10141-05-6	233-402-1	Carcinogenic and toxic for reproduction, article 57a & 57C
Cobalt(II) Sulphate	10124-43-3	233-334-2	Carcinogenic and toxic for reproduction, article 57a & 57c
Update: REACH Candidate List on 20 June 2011:			
1,2-Benzenedicarboxylic acid, di-C7-11-branched and linear alkyl esters (DHNUP)	68515-42-4	271-084-6	Toxic for reproduction, article 57c
1,2,3-Trichloropropane	96-18-4	202-486-1	Carcinogenic and toxic for reproduction, article 57a & 57C
1-Methyl-2-pyrrolidone	872-50-4	212-828-1	Toxic for reproduction, article 57c
Hydrazine	302-01-2, 7803-57-8	206-114-9	Carcinogenic, article 57a
1,2-Benzenedicarboxylic acid, di-C6-8-branched alkyl esters, C7-rich (DIHP)	71888-89-6	276-158-1	Toxic for reproduction, article 57c
Strontium chromate	7789-06-2	232-142-6	Carcinogenic, article 57a
2-Ethoxyethyl acetate	111-15-9	203-839-2	Toxic for reproduction, article 57c
Update: REACH Candidate List on 19 December 2011:			
2,2'-dichloro-4,4'-methylenedianiline	101-14-4	202-918-9	Carcinogenic, article 57a
Bis(2-methoxyethyl) phthalate	117-82-8	204-212-6	Toxic for reproduction, article 57c
Bis(2-methoxyethyl) ether	111-96-6	203-924-4	Toxic for reproduction, article 57c
Calcium arsenate	7778-44-1	231-904-5	Carcinogenic, article 57 a
Potassium hydroxyoctaoxodizincatedichromate	11103-86-9	234-329-8	Carcinogenic, article 57 a
Lead dipicrate	6477-64-1	229-335-2	Toxic for reproduction, article 57c
N,N-dimethylacetamide	127-19-5	204-826-4	Toxic for reproduction, article 57c
Arsenic acid	7778-39-4	231-901-9	Carcinogenic, article 57 a
2-Methoxyaniline; o-Anisidine	90-04-0	201-963-1	Carcinogenic, article 57 a
Trilead diarsenate	3687-31-8	222-979-5	Carcinogenic and toxic for reproduction, article 57a & 57C
1,2-dichloroethane	107-06-2	203-458-1	Carcinogenic, article 57 a
Pentazinc chromate octahydroxide	49663-84-5	256-418-0	Carcinogenic, article 57 a
Formaldehyde, oligomeric reaction products with aniline	25214-70-4	500-036-1	Carcinogenic, article 57 a
4-(1,1,3,3-tetramethylbutyl)phenol	140-66-9	205-426-2	Equivalent level of concern having probable serious effects to the environment, article 57 f
Lead diazide, Lead azide	13424-46-9	236-542-1	Toxic for reproduction, article 57c

Phenolphthalein	77-09-8	201-004-7	Carcinogenic, article 57 a
Dichromium tris(chromate)	24613-89-6	246-356-2	Carcinogenic, article 57 a
Lead styphnate	15245-44-0	239-290-0	Toxic for reproduction, article 57c
Zirconia Aluminosilicate Refractory Ceramic Fibres *are fibres covered by index number 650-017-00-8 in Annex VI, part 3, table 3.1 of Regulation (EC) No 1272/2008 of the European Parliament and of the Council of 16 December 2008 on classification, labelling and packaging of substances and mixtures, and fulfil the three following conditions: a) oxides of aluminium, silicon and zirconium are the main components present (in the fibres) within variable concentration ranges b) fibres have a length weighted geometric mean diameter less two standard geometric errors of 6 or less micrometres (µm). c) alkaline oxide and alkali earth oxide (Na2O+K2O+CaO+MgO+BaO) content less or equal to 18% by weight*	No CAS number(s) provided	No ES number(s) provided	Carcinogenic, article 57 a *Was also on REACH SVHC list published 13/01/2010*
Aluminosilicate Refractory Ceramic Fibres *are fibres covered by index number 650-017-00-8 in Annex VI, part 3, table 3.1 of Regulation (EC) No 1272/2008 of the European Parliament and of the Council of 16 December 2008 on classification, labelling and packaging of substances and mixtures, and fulfil the three following conditions: a) oxides of aluminium and silicon are the main components present (in the fibres) within variable concentration ranges b) fibres have a length weighted geometric mean diameter less two standard geometric errors of 6 or less micrometres (µm) c) alkaline oxide and alkali earth oxide (Na2O+K2O+CaO+MgO+BaO) content less or equal to 18% by weight*	No CAS number(s) provided	No ES number(s) provided	Carcinogenic, article 57 *Was also on REACH SVHC list published 13/01/2010*
Update: REACH Candidate List on 18 June 2012:			
Diboron trioxide	1303-86-2	215-125-8	Toxic for reproduction, article 57c
Lead(II) bis(methanesulfonate)	17570-76-2	401-750-5	Toxic for reproduction, article 57c
1,2-bis(2-methoxyethoxy)ethane (TEGDME; triglyme)	112-49-2	203-977-3	Toxic for reproduction, article 57c
1,2-dimethoxyethane; ethylene glycol dimethyl ether (EGDME)	110-71-4	203-794-9	Toxic for reproduction, article 57c
Formamide	75-12-7	200-842-0	Toxic for reproduction, article 57c
1,3,5-tris(oxiran-2-ylmethyl)-1,3,5-triazinane-2,4,6-trione (TGIC)	2451-62-9	219-514-3	Mutagenic (Article 57b)
1,3,5-tris[(2S and 2R)-2,3-epoxypropyl]-1,3,5-triazine-2,4,6-(1H,3H,5H)-trione (B-TGIC)	59653-74-6	423-400-0	Mutagenic (Article 57b)
4,4'-bis(dimethylamino)benzophenone (Michler's ketone)	90-94-8	202-027-5	Carcinogenic, article 57a
N,N,N',N'-tetramethyl-4,4'-methylenedianiline (Michler's base)	101-61-1	202-959-2	Carcinogenic (Article 57a)
[4-[[4-anilino-1-naphthyl][4-(dimethylamino)phenyl] methylene]cyclohexa-2,5-dien-1-ylidene] dimethylammonium chloride (C.I. Basic Blue 26) [with greater than or equal to 0.1% of Michler's ketone (EC No. 202-	2580-56-5	219-943-6	Carcinogenic, article 57a

027-5) or Michler's base (EC No. 202-959-2)]			
a,a-Bis[4-(dimethylamino)phenyl]-4 (phenylamino) naphthalene-1-methanol (C.I. Solvent Blue 4) [with greater than or equal to 0.1% of Michler's ketone (EC No. 202-027-5) or Michler's base (EC No. 202-959-2)]	6786-83-0	229-851-8	Carcinogenic (Article 57a)
[4-[4,4'-bis(dimethylamino) benzhydrylidene]cyclohexa-2,5-dien-1-ylidene]dimethylammonium chloride (C.I. Basic Violet 3) [with greater than or equal to 0.1% of Michler's ketone (EC No. 202-027-5) or Michler's base (EC No. 202-959-2)]	548-62-9	208-953-6	Carcinogenic (Article 57a)
4,4'-bis(dimethylamino)-4''-(methylamino)trityl alcohol [with greater than or equal to 0.1% of Michler's ketone (EC No. 202-027-5) or Michler's base (EC No. 202-959-2)]	561-41-1	209-218-2	Carcinogenic, article 57a
Update: REACH Candidate List on 19 December 2012			
Pyrochlore, antimony lead yellow	8012-00-8	232-382-1	Toxic for reproduction (Article 57 c)
6-methoxy-m-toluidine (p-cresidine)	120-71-8	204-419-1	Carcinogenic (Article 57a)
Henicosafluoroundecanoic acid	2058-94-8	218-165-4	vPvB (Article 57 e)
Hexahydromethylphthalic anhydride [1], Hexahydro-4-methylphthalic anhydride [2], Hexahydro-1-methylphthalic anhydride [3], Hexahydro-3-methylphthalic anhydride [4] [The individual isomers [2], [3] and [4] (including their cis- and trans- stereo isomeric forms) and all possible combinations of the isomers [1] are covered by this entry]	25550-51-0, 19438-60-9, 48122-14-1, 57110-29-9	247-094-1, 243-072-0, 256-356-4, 260-566-1	Equivalent level of concern having probable serious effects to human health (Article 57 f)
Cyclohexane-1,2-dicarboxylic anhydride [1], cis-cyclohexane-1,2-dicarboxylic anhydride [2], trans-cyclohexane-1,2-dicarboxylic anhydride [3] [The individual cis- [2] and trans- [3] isomer substances and all possible combinations of the cis- and transisomers [1] are covered by this entry]	85-42-7, 13149-00-3, 14166-21-3	201-604-9, 236-086-3, 238-009-9	Equivalent level of concern having probable serious effects to human health (Article 57 f)
Dibutyltin dichloride (DBTC)	683-18-1	211-670-0	Toxic for reproduction (Article 57 c)
Lead bis(tetrafluoroborate)	13814-96-5	237-486-0	Toxic for reproduction (Article 57 c)
Lead dinitrate	10099-74-8	233-245-9	Toxic for reproduction (Article 57 c)
Silicic acid, lead salt	11120-22-2	234-363-3	Toxic for reproduction (Article 57 c)
4-Aminoazobenzene	60-09-3	200-453-6	Carcinogenic (Article 57a)
Lead titanium zirconium oxide	12626-81-2	235-727-4	Toxic for reproduction (Article 57 c)
Lead monoxide (lead oxide)	1317-36-8	215-267-0	Toxic for reproduction (Article 57 c)
o-Toluidine	95-53-4	202-429-0	Carcinogenic (Article 57a)
3-ethyl-2-methyl-2-(3-methylbutyl)-1,3-oxazolidine	143860-04-2	421-150-7	Toxic for reproduction (Article 57c)
Silicic acid (H2Si2O5), barium salt (1:1), lead-doped *[with lead (Pb) content above the applicable generic concentration limit for 'toxicity for reproduction' Repr. 1A (CLP) or category 1 (DSD); the substance is a member of the group entry of lead compounds, with index number 082-001-00-*	68784-75-8	272-271-5	Toxic for reproduction (Article 57 c)

6 in Regulation (EC) No 1272/2008]			
Trilead bis(carbonate)dihydroxide	1319-46-6	215-290-6	Toxic for reproduction (Article 57 c)
Furan	110-00-9	203-727-3	Carcinogenic (Article 57a)
N,N-dimethylformamide	68-12-2	200-679-5	Toxic for reproduction (Article 57 c)
4-(1,1,3,3-tetramethylbutyl)phenol, ethoxylated [covering well-defined substances and UVCB substances, polymers and homologues]	-	-	Equivalent level of concern having probable serious effects to human health (Article 57 f)
4-Nonylphenol, branched and linear [substances with a linear and/or branched alkyl chain with a carbon number of 9 covalently bound in position 4 to phenol, covering also UVCB- and well-defined substances which include any of the individual isomers or a combination thereof]	-	-	Equivalent level of concern having probable serious effects to human health (Article 57 f)
4,4'-methylenedi-o-toluidine	838-88-0	212-658-8	Carcinogenic (Article 57a)
Diethyl sulphate	64-67-5	200-589-6	Carcinogenic (Article 57a); Mutagenic (Article 57b)
Dimethyl sulphate	77-78-1	201-058-1	Carcinogenic (Article 57a)
Lead oxide sulfate	12036-76-9	234-853-7	Toxic for reproduction (Article 57 c)
Lead titanium trioxide	12060-00-3	235-038-9	Toxic for reproduction (Article 57 c)
Acetic acid, lead salt, basic	51404-69-4	257-175-3	Toxic for reproduction (Article 57 c)
[Phthalato(2-)]dioxotrilead	69011-06-9	273-688-5	Toxic for reproduction (Article 57 c)
Bis(pentabromophenyl)ether decabromodiphenyl ether; DecaBDE)	1163-19-5	214-604-9	PBT (Article 57 d); vPvB (Article 57 e)
N-methylacetamide	79-16-3	201-182-6	Toxic for reproduction (Article 57c)
Dinoseb (6-sec-butyl-2,4-dinitrophenol)	88-85-7	201-861-7	Toxic for reproduction (Article 57c)
1,2-Diethoxyethane	629-14-1	211-076-1	Toxic for reproduction (Article 57 c)
Tetralead trioxide sulphate	12202-17-4	235-380-9	Toxic for reproduction (Article 57c)
N-pentyl-isopentylphthalate	776297-69-9	-	Toxic for reproduction (Article 57 c)
Dioxobis(stearato)trilead	12578-12-0	235-702-8	Toxic for reproduction (Article 57 c)
Tetraethyllead	78-00-2	201-075-4	Toxic for reproduction (Article 57c)
Pentalead tetraoxide sulphate	12065-90-6	235-067-7	Toxic for reproduction (Article 57 c)
Pentacosafluorotridecanoic acid	72629-94-8	276-745-2	vPvB (Article 57 e)
Tricosafluorododecanoic acid	307-55-1	206-203-2	vPvB (Article 57 e)
Heptacosafluorotetradecanoic acid	376-06-7	206-803-4	vPvB (Article 57 e)
1-bromopropane (n-propyl bromide)	106-94-5	203-445-0	Toxic for reproduction (Article 57 c)
Methoxyacetic acid	625-45-6	210-894-6	Toxic for reproduction (Article 57 c)
4-methyl-m-phenylenediamine (toluene-2,4-diamine)	95-80-7	202-453-1	Carcinogenic (Article 57a)
Methyloxirane (Propylene oxide)	75-56-9	200-879-2	Carcinogenic (Article 57a); Mutagenic (Article 57b)
Trilead dioxide phosphonate	12141-20-7	235-252-2	Toxic for reproduction (Article 57c)
o-aminoazotoluene	97-56-3	202-591-2	Carcinogenic (Article 57a)
1,2-Benzenedicarboxylic acid, dipentylester, branched and linear	84777-06-0	284-032-2	Toxic for reproduction (Article 57 c)
4,4'-oxydianiline and its salts	101-80-4	202-977-0	Carcinogenic (Article 57a); Mutagenic (Article 57b)

Orange lead (lead tetroxide)	1314-41-6	215-235-6	Toxic for reproduction (Article 57 c)
Biphenyl-4-ylamine	92-67-1	202-177-1	Carcinogenic (Article 57a)
Diisopentylphthalate (DIPP)	605-50-5	210-088-4	Toxic for reproduction (Article 57 c)
Fatty acids, C16-18, lead salts	91031-62-8	292-966-7	Toxic for reproduction (Article 57 c)
Diazene-1,2-dicarboxamide (C,C'-azodi(formamide)) *(ADCA)*	123-77-3	204-650-8	Equivalent level of concern having probable serious effects to human health (Article 57 f)
Sulfurous acid, lead salt, dibasic	62229-08-7	263-467-1	Toxic for reproduction (Article 57 c)
Lead cyanamidate	20837-86-9	244-073-9	Toxic for reproduction (Article 57 c)
Update: REACH Candidate List on 20 June 2013:			
Cadmium	7440-43-9	231-152-8	Carcinogenic (Article 57a); Equivalent level of concern having probable serious effects to human health (Article 57f)
Cadmium oxide	1306-19-0	215-146-2	Carcinogenic (Article 57a); Equivalent level of concern having probable serious effects to human health (Article 57f)
Pentadecafluorooctanoic acid (PFOA)	335-67-1	206-397-9	Toxic for reproduction (Article 57c); PBT (Article 57d)
Ammonium pentadecafluorooctanoate (APFO)	3825-26-1	223-320-4	Toxic for reproduction (Article 57c); PBT (Article 57d)
Dipentyl phthalate (DPP)	131-18-0	205-017-9	Toxic for reproduction (Article 57c)
4-Nonylphenol, branched and linear, ethoxylated [substances with a linear and/or branched alkyl chain with a carbon number of 9 covalently bound in position 4 to phenol, ethoxylated covering UVCB- and well-defined substances, polymers and homologues, which include any of the individual isomers and/or combinations thereof]	-	-	Equivalent level of concern having probable serious effects to the environment (Article 57f)
Update: REACH Candidate List on 16 December 2013			
Disodium 4-amino-3-[[4'-[(2,4-diaminophenyl)azo] [1,1'-biphenyl]-4-yl]azo] -5-hydroxy-6-(phenylazo) naphthalene-2,7-disulphonate (C.I. Direct Black 38)	1937-37-7	217-710-3	Carcinogenic (Article 57a)
Trixylyl phosphate	25155-23-1	246-677-8	Toxic for reproduction (Article 57c)
Disodium 3,3'-[[1,1'-biphenyl]-4,4'-diylbis(azo)]bis(4-aminonaphthalene-1-sulphonate) (C.I. Direct Red 28)	573-58-0	209-358-4	Carcinogenic (Article 57a)
Dihexyl phthalate	84-75-3	201-559-5	Toxic for reproduction (Article 57c)
Imidazolidine-2-thione; (2-imidazoline-2-thiol)	96-45-7	202-506-9	Toxic for reproduction (Article 57c)
Cadmium sulphide	1306-23-6	215-147-8	Carcinogenic (Article 57a); Equivalent level of concern having probable serious effects to human health (Article 57f)
Lead di(acetate)	301-04-2	206-104-4	Toxic for reproduction (Article 57c)

Update: REACH Candidate List on 16 June 2014			
1,2-Benzenedicarboxylic acid, dihexyl ester, branched and linear	68515-50-4	271-093-5	Toxic for reproduction (Article 57c)
Cadmium chloride	10108-64-2	233-296-7	Carcinogenic (Article 57a); Mutagenic (Article 57b); Toxic for reproduction (Article 57c); Equivalent level of concern having probable serious effects to human health (Article 57 f)
Sodium perborate; perboric acid, sodium salt	-	239-172-9; 234-390-0	Toxic for reproduction (Article 57c)
Sodium peroxometaborate	7632-04-4	231-556-4	Toxic for reproduction (Article 57c)
Update: REACH Candidate List on 17 Dec 2014			
Cadmium fluoride	7790-79-6	232-222-0	Carcinogenic (Article 57a): Mutagenic (Article57b); Toxic for reproduction (Article 57c); Equivalent level of concern having probable serious effects to human health (Article 57f)
Cadmium sulfate	10124-36-4 31119-53-6	233-331-6	Carcinogenic (Article 57a); Mutagenic (Article 57b); Toxic for reproduction (Article 57c); Equivalent level of concern having probable serious effects to human health (Article 57 f)
2-Benzotriazoi-2-yl-4, 6-di-tert-butyphenol (UV-320)	3846-71-7	223-346-6	PBT (Article 57d); vPvB (Article 57e)
2-(2H-benzotriazol-2-yl)-4, 6-ditertpentylphenol (UV-328)	25973-55-1	247-384-8	PBT (Article 57d); vPvB (Article 57e)
2-ethylhexyl 10-ethyl-4,4-dioctyl-7-oxo-8-oxa-3,5-dithia-4-stannatefradecanoate (DOTE)	15571-58-1	239-622-4	Toxic for reproduction (Article) 57c)
reaction mass of 2-ethylhexyl 10-ethyl-4,4-dloctyl-7-oxo-8-oxa-3,5-dithia-4-stannatetradecanoate and 2-ethylhexyl 10-ethyl-4-ll2[(2ethylhexyl)oxy)-2-oxoethyl)thio}-4-octyl-7-oxo-8-oxa-3,5-dithia-4-stannatetradecanoate (reaction mass of DOTE and MOTE)	-	-	Toxic for reproduction (Article) 57c)
Update: REACH Candidate List on 15 Jun 2015			
1,2-benzenedicarboxylic acid, di-C6-10-alkyl esters; 1,2-benzenedicarboxylic acid, mixed decyl and hexyl and octyl diesters with greater than or equal to 0.3% of dihexyl phthalate	68515-51-5, 68648-93-1	201-559-5	Toxic for reproduction (Article 57c)
5-sec-butyl-2-(2,4-dimethylcyclohex-3-en-1-yl)-5-methyl-1,3-dioxane [1], 5-sec-butyl-2-(4,6-dimethylcyclohex-3-en-1-yl)-5-methyl-1,3-dioxane [2] [covering any of the individual stereoisomers of [1] and [2] or any combination thereof]	No CAS number(s) provided	No EC number(s) provided	vPvB (Article 57e)

Currently no substances in TI products are listed under the restriction provisions of REACH Article XVII.

TI has taken and continues to take commercially reasonable steps to provide representative and accurate information concerning the application of REACH on TI IC products and development vehicles. TI relies on information from third parties, including suppliers and may not have conducted destructive testing or chemical analysis on incoming materials and chemicals. TI's standard warranty and limitation of liability provisions of TI's Standard Terms and Conditions (available at: http://www.ti.com/sc/docs/stdterms.htm) apply to the representations herein unless otherwise provided by a written contract or other agreement signed by the parties.

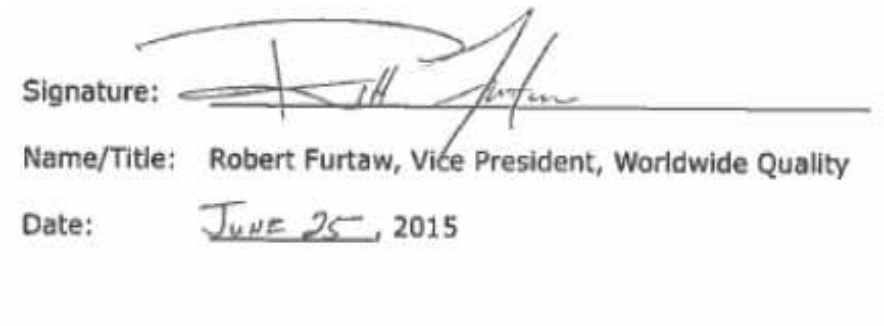

IMPORTANT NOTICE

Texas Instruments Incorporated and its subsidiaries (TI) reserve the right to make corrections, enhancements, improvements and other changes to its semiconductor products and services per JESD46, latest issue, and to discontinue any product or service per JESD48, latest issue. Buyers should obtain the latest relevant information before placing orders and should verify that such information is current and complete. All semiconductor products (also referred to herein as "components") are sold subject to TI's terms and conditions of sale supplied at the time of order acknowledgment.

TI warrants performance of its components to the specifications applicable at the time of sale, in accordance with the warranty in TI's terms and conditions of sale of semiconductor products. Testing and other quality control techniques are used to the extent TI deems necessary to support this warranty. Except where mandated by applicable law, testing of all parameters of each component is not necessarily performed.

TI assumes no liability for applications assistance or the design of Buyers' products. Buyers are responsible for their products and applications using TI components. To minimize the risks associated with Buyers' products and applications, Buyers should provide adequate design and operating safeguards.

TI does not warrant or represent that any license, either express or implied, is granted under any patent right, copyright, mask work right, or other intellectual property right relating to any combination, machine, or process in which TI components or services are used. Information published by TI regarding third-party products or services does not constitute a license to use such products or services or a warranty or endorsement thereof. Use of such information may require a license from a third party under the patents or other intellectual property of the third party, or a license from TI under the patents or other intellectual property of TI.

Reproduction of significant portions of TI information in TI data books or data sheets is permissible only if reproduction is without alteration and is accompanied by all associated warranties, conditions, limitations, and notices. TI is not responsible or liable for such altered documentation. Information of third parties may be subject to additional restrictions.

Resale of TI components or services with statements different from or beyond the parameters stated by TI for that component or service voids all express and any implied warranties for the associated TI component or service and is an unfair and deceptive business practice. TI is not responsible or liable for any such statements.

Buyer acknowledges and agrees that it is solely responsible for compliance with all legal, regulatory and safety-related requirements concerning its products, and any use of TI components in its applications, notwithstanding any applications-related information or support that may be provided by TI. Buyer represents and agrees that it has all the necessary expertise to create and implement safeguards which anticipate dangerous consequences of failures, monitor failures and their consequences lessen the likelihood of failures that might cause harm and take appropriate remedial actions. Buyer will fully indemnify TI and its representatives against any damages arising out of the use of any TI components in safety-critical applications.

In some cases, TI components may be promoted specifically to facilitate safety-related applications. With such components, TI's goal is to help enable customers to design and create their own end-product solutions that meet applicable functional safety standards and requirements. Nonetheless, such components are subject to these terms.

No TI components are authorized for use in FDA Class III (or similar life-critical medical equipment) unless authorized officers of the parties have executed a special agreement specifically governing such use.

Only those TI components which TI has specifically designated as military grade or "enhanced plastic" are designed and intended for use in military/aerospace applications or environments. Buyer acknowledges and agrees that any military or aerospace use of TI components which have not been so designated is solely at the Buyer's risk, and that Buyer is solely responsible for compliance with all legal and regulatory requirements in connection with such use.

TI has specifically designated certain components as meeting ISO/TS16949 requirements, mainly for automotive use. In any case of use of non-designated products, TI will not be responsible for any failure to meet ISO/TS16949.

Products		**Applications**	
Audio	www.ti.com/audio	Automotive and Transportation	www.ti.com/automotive
Amplifiers	amplifier.ti.com	Communications and Telecom	www.ti.com/communications
Data Converters	dataconverter.ti.com	Computers and Peripherals	www.ti.com/computers
DLP® Products	www.dlp.com	Consumer Electronics	www.ti.com/consumer-apps
DSP	dsp.ti.com	Energy and Lighting	www.ti.com/energy
Clocks and Timers	www.ti.com/clocks	Industrial	www.ti.com/industrial
Interface	interface.ti.com	Medical	www.ti.com/medical
Logic	logic.ti.com	Security	www.ti.com/security
Power Mgmt	power.ti.com	Space, Avionics and Defense	www.ti.com/space-avionics-defense
Microcontrollers	microcontroller.ti.com	Video and Imaging	www.ti.com/video
RFID	www.ti-rfid.com	TI E2E Community	e2e.ti.com
OMAP Applications Processors	www.ti.com/omap		
Wireless Connectivity	www.ti.com/wirelessconnectivity		

Mailing Address: Texas Instruments, Post Office Box 655303, Dallas, Texas 75265
Copyright © 2014, Texas Instruments Incorporated

IMPORTANT NOTICE

Texas Instruments Incorporated and its subsidiaries (TI) reserve the right to make corrections, enhancements, improvements and other changes to its semiconductor products and services per JESD46, latest issue, and to discontinue any product or service per JESD48, latest issue. Buyers should obtain the latest relevant information before placing orders and should verify that such information is current and complete. All semiconductor products (also referred to herein as “components”) are sold subject to TI’s terms and conditions of sale supplied at the time of order acknowledgment.

TI warrants performance of its components to the specifications applicable at the time of sale, in accordance with the warranty in TI’s terms and conditions of sale of semiconductor products. Testing and other quality control techniques are used to the extent TI deems necessary to support this warranty. Except where mandated by applicable law, testing of all parameters of each component is not necessarily performed.

TI assumes no liability for applications assistance or the design of Buyers’ products. Buyers are responsible for their products and applications using TI components. To minimize the risks associated with Buyers’ products and applications, Buyers should provide adequate design and operating safeguards.

TI does not warrant or represent that any license, either express or implied, is granted under any patent right, copyright, mask work right, or other intellectual property right relating to any combination, machine, or process in which TI components or services are used. Information published by TI regarding third-party products or services does not constitute a license to use such products or services or a warranty or endorsement thereof. Use of such information may require a license from a third party under the patents or other intellectual property of the third party, or a license from TI under the patents or other intellectual property of TI.

Reproduction of significant portions of TI information in TI data books or data sheets is permissible only if reproduction is without alteration and is accompanied by all associated warranties, conditions, limitations, and notices. TI is not responsible or liable for such altered documentation. Information of third parties may be subject to additional restrictions.

Resale of TI components or services with statements different from or beyond the parameters stated by TI for that component or service voids all express and any implied warranties for the associated TI component or service and is an unfair and deceptive business practice. TI is not responsible or liable for any such statements.

Buyer acknowledges and agrees that it is solely responsible for compliance with all legal, regulatory and safety-related requirements concerning its products, and any use of TI components in its applications, notwithstanding any applications-related information or support that may be provided by TI. Buyer represents and agrees that it has all the necessary expertise to create and implement safeguards which anticipate dangerous consequences of failures, monitor failures and their consequences, lessen the likelihood of failures that might cause harm and take appropriate remedial actions. Buyer will fully indemnify TI and its representatives against any damages arising out of the use of any TI components in safety-critical applications.

In some cases, TI components may be promoted specifically to facilitate safety-related applications. With such components, TI’s goal is to help enable customers to design and create their own end-product solutions that meet applicable functional safety standards and requirements. Nonetheless, such components are subject to these terms.

No TI components are authorized for use in FDA Class III (or similar life-critical medical equipment) unless authorized officers of the parties have executed a special agreement specifically governing such use.

Only those TI components which TI has specifically designated as military grade or “enhanced plastic” are designed and intended for use in military/aerospace applications or environments. Buyer acknowledges and agrees that any military or aerospace use of TI components which have ***not*** been so designated is solely at the Buyer's risk, and that Buyer is solely responsible for compliance with all legal and regulatory requirements in connection with such use.

TI has specifically designated certain components as meeting ISO/TS16949 requirements, mainly for automotive use. In any case of use of non-designated products, TI will not be responsible for any failure to meet ISO/TS16949.

Products		**Applications**	
Audio	www.ti.com/audio	Automotive and Transportation	www.ti.com/automotive
Amplifiers	amplifier.ti.com	Communications and Telecom	www.ti.com/communications
Data Converters	dataconverter.ti.com	Computers and Peripherals	www.ti.com/computers
DLP® Products	www.dlp.com	Consumer Electronics	www.ti.com/consumer-apps
DSP	dsp.ti.com	Energy and Lighting	www.ti.com/energy
Clocks and Timers	www.ti.com/clocks	Industrial	www.ti.com/industrial
Interface	interface.ti.com	Medical	www.ti.com/medical
Logic	logic.ti.com	Security	www.ti.com/security
Power Mgmt	power.ti.com	Space, Avionics and Defense	www.ti.com/space-avionics-defense
Microcontrollers	microcontroller.ti.com	Video and Imaging	www.ti.com/video
RFID	www.ti-rfid.com		
OMAP Applications Processors	www.ti.com/omap	**TI E2E Community**	e2e.ti.com
Wireless Connectivity	www.ti.com/wirelessconnectivity		

Mailing Address: Texas Instruments, Post Office Box 655303, Dallas, Texas 75265
Copyright © 2015, Texas Instruments Incorporated

Texas Instruments Incorporated

Statement on non-use of HBCDD & Phthalates (DEHP, BBP, DBP, DINP, DNOP, DIBP and DIDP)
In Texas Instruments (TI) Semiconductor Products

Date: 14 Mar 2013

Texas Instruments continues to actively monitor regulatory requirements for new and proposed regulations that may restrict the use of additional substances in electronic products. The current restrictions being proposed for HBCDD and Phthalates (DEHP, BBP, DBP, DINP, DNOP, DIBP and DIDP) in particular have already been evaluated with TI's internal tracking systems and have been determined to not be contained in TI's finished IC products. This database is developed from full homogeneous reporting required from our suppliers for each material set approved for production.

Testing for bromine, due to customer requirements for low halogen products, are already being performed at the homogeneous level for applicable plasticizers such as mold compounds, die attaches & substrates. TI products stated to be "green" meet these low halogen requirements. Products stated as RoHS compliant may meet them, but would need to be verified. The low halogen threshold is < 900ppm for Chlorine & Bromine and <1500ppm for the sum of Chlorine and Bromine. TI does not use inks, paints or dyes in its finished IC products since they are laser scribed.

As laws are released, any new testing requirements will take approximately 18 months to pass through the supply chain for applicable material sets.

While some PAH's have been identified for use control in EU directives and International Treaties, these do not apply to semiconductors. Those controls specifically apply to tires and extender oils. These materials are not used to manufacture semiconductors. This information represents TI's knowledge and belief as of the date that it is provided.

Sincerely,



Mark Frimann
SC Product Stewardship Management
SC Quality – Texas Instruments

SZZQ091

IMPORTANT NOTICE

Texas Instruments Incorporated and its subsidiaries (TI) reserve the right to make corrections, enhancements, improvements and other changes to its semiconductor products and services per JESD46, latest issue, and to discontinue any product or service per JESD48, latest issue. Buyers should obtain the latest relevant information before placing orders and should verify that such information is current and complete. All semiconductor products (also referred to herein as “components”) are sold subject to TI’s terms and conditions of sale supplied at the time of order acknowledgment.

TI warrants performance of its components to the specifications applicable at the time of sale, in accordance with the warranty in TI’s terms and conditions of sale of semiconductor products. Testing and other quality control techniques are used to the extent TI deems necessary to support this warranty. Except where mandated by applicable law, testing of all parameters of each component is not necessarily performed.

TI assumes no liability for applications assistance or the design of Buyers’ products. Buyers are responsible for their products and applications using TI components. To minimize the risks associated with Buyers’ products and applications, Buyers should provide adequate design and operating safeguards.

TI does not warrant or represent that any license, either express or implied, is granted under any patent right, copyright, mask work right, or other intellectual property right relating to any combination, machine, or process in which TI components or services are used. Information published by TI regarding third-party products or services does not constitute a license to use such products or services or a warranty or endorsement thereof. Use of such information may require a license from a third party under the patents or other intellectual property of the third party, or a license from TI under the patents or other intellectual property of TI.

Reproduction of significant portions of TI information in TI data books or data sheets is permissible only if reproduction is without alteration and is accompanied by all associated warranties, conditions, limitations, and notices. TI is not responsible or liable for such altered documentation. Information of third parties may be subject to additional restrictions.

Resale of TI components or services with statements different from or beyond the parameters stated by TI for that component or service voids all express and any implied warranties for the associated TI component or service and is an unfair and deceptive business practice. TI is not responsible or liable for any such statements.

Buyer acknowledges and agrees that it is solely responsible for compliance with all legal, regulatory and safety-related requirements concerning its products, and any use of TI components in its applications, notwithstanding any applications-related information or support that may be provided by TI. Buyer represents and agrees that it has all the necessary expertise to create and implement safeguards which anticipate dangerous consequences of failures, monitor failures and their consequences, lessen the likelihood of failures that might cause harm and take appropriate remedial actions. Buyer will fully indemnify TI and its representatives against any damages arising out of the use of any TI components in safety-critical applications.

In some cases, TI components may be promoted specifically to facilitate safety-related applications. With such components, TI’s goal is to help enable customers to design and create their own end-product solutions that meet applicable functional safety standards and requirements. Nonetheless, such components are subject to these terms.

No TI components are authorized for use in FDA Class III (or similar life-critical medical equipment) unless authorized officers of the parties have executed a special agreement specifically governing such use.

Only those TI components which TI has specifically designated as military grade or “enhanced plastic” are designed and intended for use in military/aerospace applications or environments. Buyer acknowledges and agrees that any military or aerospace use of TI components which have ***not*** been so designated is solely at the Buyer's risk, and that Buyer is solely responsible for compliance with all legal and regulatory requirements in connection with such use.

TI has specifically designated certain components as meeting ISO/TS16949 requirements, mainly for automotive use. In any case of use of non-designated products, TI will not be responsible for any failure to meet ISO/TS16949.

Products		**Applications**	
Audio	www.ti.com/audio	Automotive and Transportation	www.ti.com/automotive
Amplifiers	amplifier.ti.com	Communications and Telecom	www.ti.com/communications
Data Converters	dataconverter.ti.com	Computers and Peripherals	www.ti.com/computers
DLP® Products	www.dlp.com	Consumer Electronics	www.ti.com/consumer-apps
DSP	dsp.ti.com	Energy and Lighting	www.ti.com/energy
Clocks and Timers	www.ti.com/clocks	Industrial	www.ti.com/industrial
Interface	interface.ti.com	Medical	www.ti.com/medical
Logic	logic.ti.com	Security	www.ti.com/security
Power Mgmt	power.ti.com	Space, Avionics and Defense	www.ti.com/space-avionics-defense
Microcontrollers	microcontroller.ti.com	Video and Imaging	www.ti.com/video
RFID	www.ti-rfid.com		
OMAP Applications Processors	www.ti.com/omap	**TI E2E Community**	e2e.ti.com
Wireless Connectivity	www.ti.com/wirelessconnectivity		

Mailing Address: Texas Instruments, Post Office Box 655303, Dallas, Texas 75265
Copyright © 2013, Texas Instruments Incorporated

TEXAS INSTRUMENTS

RoHS & Material Declaration Certificate for Semiconductor Products

TI certifies to the best of its knowledge that TI's semiconductor products designated as "Pb-Free", "RoHS Exempt" or "Green" (defined below):

- Are compliant with the threshold requirements of the European Union's Restriction on Use of Hazardous Substances Directive, 2002/95/EC ("RoHS1"), as well as the recast Directive 2011/65/EU ("RoHS 2")
- Do not exceed IEC 62474 dB (formerly the Joint Industry Guide ("JIG-101")) and the Global Automotive Declarable Substance List (GADSL) for regulated substance thresholds
- Meet the China Management Methods for controlling Pollution by Electronic Information Products ("China RoHS").
- Do not contain any of the Registration, Evaluation, Authorization and Restriction of Chemicals ("REACH") substances of very high concern (SVHC) above the regulatory threshold of 0.1% at the Article 33 level. (See TI_REACH_Statement.pdf for the latest TI REACH document)

TI defines "Pb-free", "RoHS Exempt" and "Green" products as follows:

- **Pb-Free:** TI defines "Pb-Free" or "RoHS Compliant" to mean semiconductor products that are compliant with the current EU RoHS requirements for all 6 RoHS substances, including the requirement that lead not exceed 0.1% by weight in homogeneous materials. Where designed to be soldered at high temperatures, TI "Pb-Free" and "RoHS Compliant" products are suitable for use in specified lead-free processes. Product is also fully compliant to GADSL and IEC 62474 database electronics requirements
- **RoHS Exempt:** TI defines "RoHS Exempt" to mean products that contain lead but are compliant with EU RoHS pursuant to a specific EU RoHS exemption.
- **Green:** TI defines "Green" to mean Pb-Free/RoHS Compliant and content of Chlorine (Cl), Bromine (Br) based flame retardants meet JS709B low halogen requirements of <=1000ppm threshold. Antimony trioxide based flame retardants must meet the 1000ppm threshold requirement

***Note:** Proprietary materials must be in full compliance to known regulatory requirements as well*

TI semiconductor products *not* designated as "Pb-Free" or "Green" complies with EU RoHS and China RoHS for all substances except Lead (Pb), which may be found in the leadframe plating or solder balls, or in one of the RoHS exempt applications, 7(a), 7(c)-I, 7(c)-IV or 15. For semiconductor products containing lead, the China RoHS EFUP is 50 years (www.ti.com/leadfree).

TI's position is that its semiconductor products are considered "components" under EU RoHS definition. Therefore, the CE marking, EU declaration of conformity, and internal product control provisions stipulated in Article 7 of RoHS 2 do not apply.

Evaluation modules (EVMs): TI's EVMs are "equipment specifically designed solely for the purposes of research and development only made available on a business-to-business basis" and, per Article 2(4)(j) of RoHS 2, are not subject to RoHS 2.

To the best of TI's knowledge, its packing materials (boxes, trays, etc) comply with EU Directive 2013/2/EU for Packaging and Packaging Waste Material.

Signature: 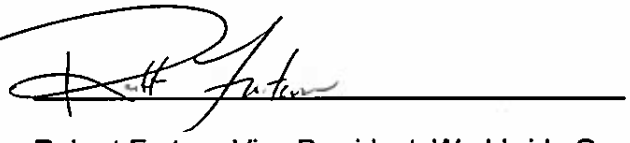

Name/Title: Robert Furtaw, Vice President, Worldwide Quality

Date: 05/29/2015

Important Warrantee and Disclaimer Information

TI bases its material content knowledge on information provided by third parties and has taken and continues to take commercially reasonable steps to provide representative and accurate information but may not have conducted destructive testing or chemical analysis on incoming materials and chemicals. TI and TI suppliers consider certain limited information to be proprietary, and thus CAS numbers and other limited information may not be available for release. TI's standard warranty and limitation of liability provisions of TI's Standard Terms and Conditions (available at http://www.ti.com/sc/docs/stdterms.htm) apply to the representations herein unless otherwise provided by a written contract or other agreement signed by the parties.

IMPORTANT NOTICE

Texas Instruments Incorporated and its subsidiaries (TI) reserve the right to make corrections, enhancements, improvements and other changes to its semiconductor products and services per JESD46, latest issue, and to discontinue any product or service per JESD48, latest issue. Buyers should obtain the latest relevant information before placing orders and should verify that such information is current and complete. All semiconductor products (also referred to herein as "components") are sold subject to TI's terms and conditions of sale supplied at the time of order acknowledgment.
TI warrants performance of its components to the specifications applicable at the time of sale, in accordance with the warranty in TI's terms and conditions of sale of semiconductor products. Testing and other quality control techniques are used to the extent TI deems necessary to support this warranty. Except where mandated by applicable law, testing of all parameters of each component is not necessarily performed.

TI assumes no liability for applications assistance or the design of Buyers' products. Buyers are responsible for their products and applications using TI components. To minimize the risks associated with Buyers' products and applications, Buyers should provide adequate design and operating safeguards.

TI does not warrant or represent that any license, either express or implied, is granted under any patent right, copyright, mask work right, or other intellectual property right relating to any combination, machine, or process in which TI components or services are used. Information published by TI regarding third-party products or services does not constitute a license to use such products or services or a warranty or endorsement thereof. Use of such information may require a license from a third party under the patents or other intellectual property of the third party, or a license from TI under the patents or other intellectual property of TI.

Reproduction of significant portions of TI information in TI data books or data sheets is permissible only if reproduction is without alteration and is accompanied by all associated warranties, conditions, limitations, and notices. TI is not responsible or liable for such altered documentation. Information of third parties may be subject to additional restrictions.

Resale of TI components or services with statements different from or beyond the parameters stated by TI for that component or service voids all express and any implied warranties for the associated TI component or service and is an unfair and deceptive business practice. TI is not responsible or liable for any such statements.

Buyer acknowledges and agrees that it is solely responsible for compliance with all legal, regulatory and safety-related requirements concerning its products, and any use of TI components in its applications, notwithstanding any applications-related information or support that may be provided by TI. Buyer represents and agrees that it has all the necessary expertise to create and implement safeguards which anticipate dangerous consequences of failures, monitor failures and their consequences lessen the likelihood of failures that might cause harm and take appropriate remedial actions. Buyer will fully indemnify TI and its representatives against any damages arising out of the use of any TI components in safety-critical applications.

In some cases, TI components may be promoted specifically to facilitate safety-related applications. With such components, TI's goal is to help enable customers to design and create their own end-product solutions that meet applicable functional safety standards and requirements. Nonetheless, such components are subject to these terms.

No TI components are authorized for use in FDA Class III (or similar life-critical medical equipment) unless authorized officers of the parties have executed a special agreement specifically governing such use.

Only those TI components which TI has specifically designated as military grade or "enhanced plastic" are designed and intended for use in military/aerospace applications or environments. Buyer acknowledges and agrees that any military or aerospace use of TI components which have ***not*** been so designated is solely at the Buyer's risk, and that Buyer is solely responsible for compliance with all legal and regulatory requirements in connection with such use.

TI has specifically designated certain components as meeting ISO/TS16949 requirements, mainly for automotive use. In any case of use of non-designated products, TI will not be responsible for any failure to meet ISO/TS16949.

Products		**Applications**	
Audio	www.ti.com/audio	Automotive and Transportation	www.ti.com/automotive
Amplifiers	amplifier.ti.com	Communications and Telecom	www.ti.com/communications
Data Converters	dataconverter.ti.com	Computers and Peripherals	www.ti.com/computers
DLP® Products	www.dlp.com	Consumer Electronics	www.ti.com/consumer-apps
DSP	dsp.ti.com	Energy and Lighting	www.ti.com/energy
Clocks and Timers	www.ti.com/clocks	Industrial	www.ti.com/industrial
Interface	interface.ti.com	Medical	www.ti.com/medical
Logic	logic.ti.com	Security	www.ti.com/security
Power Mgmt	power.ti.com	Space, Avionics and Defense	www.ti.com/space-avionics-defense
Microcontrollers	microcontroller.ti.com	Video and Imaging	www.ti.com/video
RFID	www.ti-rfid.com	TI E2E Community	e2e.ti.com
OMAP Applications Processors	www.ti.com/omap		
Wireless Connectivity	www.ti.com/wirelessconnectivity		

Mailing Address: Texas Instruments, Post Office Box 655303, Dallas, Texas 75265
Copyright © 2014, Texas Instruments Incorporated

IMPORTANT NOTICE

Texas Instruments Incorporated and its subsidiaries (TI) reserve the right to make corrections, enhancements, improvements and other changes to its semiconductor products and services per JESD46, latest issue, and to discontinue any product or service per JESD48, latest issue. Buyers should obtain the latest relevant information before placing orders and should verify that such information is current and complete. All semiconductor products (also referred to herein as “components”) are sold subject to TI’s terms and conditions of sale supplied at the time of order acknowledgment.

TI warrants performance of its components to the specifications applicable at the time of sale, in accordance with the warranty in TI’s terms and conditions of sale of semiconductor products. Testing and other quality control techniques are used to the extent TI deems necessary to support this warranty. Except where mandated by applicable law, testing of all parameters of each component is not necessarily performed.

TI assumes no liability for applications assistance or the design of Buyers’ products. Buyers are responsible for their products and applications using TI components. To minimize the risks associated with Buyers’ products and applications, Buyers should provide adequate design and operating safeguards.

TI does not warrant or represent that any license, either express or implied, is granted under any patent right, copyright, mask work right, or other intellectual property right relating to any combination, machine, or process in which TI components or services are used. Information published by TI regarding third-party products or services does not constitute a license to use such products or services or a warranty or endorsement thereof. Use of such information may require a license from a third party under the patents or other intellectual property of the third party, or a license from TI under the patents or other intellectual property of TI.

Reproduction of significant portions of TI information in TI data books or data sheets is permissible only if reproduction is without alteration and is accompanied by all associated warranties, conditions, limitations, and notices. TI is not responsible or liable for such altered documentation. Information of third parties may be subject to additional restrictions.

Resale of TI components or services with statements different from or beyond the parameters stated by TI for that component or service voids all express and any implied warranties for the associated TI component or service and is an unfair and deceptive business practice. TI is not responsible or liable for any such statements.

Buyer acknowledges and agrees that it is solely responsible for compliance with all legal, regulatory and safety-related requirements concerning its products, and any use of TI components in its applications, notwithstanding any applications-related information or support that may be provided by TI. Buyer represents and agrees that it has all the necessary expertise to create and implement safeguards which anticipate dangerous consequences of failures, monitor failures and their consequences, lessen the likelihood of failures that might cause harm and take appropriate remedial actions. Buyer will fully indemnify TI and its representatives against any damages arising out of the use of any TI components in safety-critical applications.

In some cases, TI components may be promoted specifically to facilitate safety-related applications. With such components, TI’s goal is to help enable customers to design and create their own end-product solutions that meet applicable functional safety standards and requirements. Nonetheless, such components are subject to these terms.

No TI components are authorized for use in FDA Class III (or similar life-critical medical equipment) unless authorized officers of the parties have executed a special agreement specifically governing such use.

Only those TI components which TI has specifically designated as military grade or “enhanced plastic” are designed and intended for use in military/aerospace applications or environments. Buyer acknowledges and agrees that any military or aerospace use of TI components which have ***not*** been so designated is solely at the Buyer's risk, and that Buyer is solely responsible for compliance with all legal and regulatory requirements in connection with such use.

TI has specifically designated certain components as meeting ISO/TS16949 requirements, mainly for automotive use. In any case of use of non-designated products, TI will not be responsible for any failure to meet ISO/TS16949.

Products		**Applications**	
Audio	www.ti.com/audio	Automotive and Transportation	www.ti.com/automotive
Amplifiers	amplifier.ti.com	Communications and Telecom	www.ti.com/communications
Data Converters	dataconverter.ti.com	Computers and Peripherals	www.ti.com/computers
DLP® Products	www.dlp.com	Consumer Electronics	www.ti.com/consumer-apps
DSP	dsp.ti.com	Energy and Lighting	www.ti.com/energy
Clocks and Timers	www.ti.com/clocks	Industrial	www.ti.com/industrial
Interface	interface.ti.com	Medical	www.ti.com/medical
Logic	logic.ti.com	Security	www.ti.com/security
Power Mgmt	power.ti.com	Space, Avionics and Defense	www.ti.com/space-avionics-defense
Microcontrollers	microcontroller.ti.com	Video and Imaging	www.ti.com/video
RFID	www.ti-rfid.com		
OMAP Applications Processors	www.ti.com/omap	**TI E2E Community**	e2e.ti.com
Wireless Connectivity	www.ti.com/wirelessconnectivity		

Mailing Address: Texas Instruments, Post Office Box 655303, Dallas, Texas 75265
Copyright © 2015, Texas Instruments Incorporated