REV.	DATE	DESCRIPTION	BY	ARRD

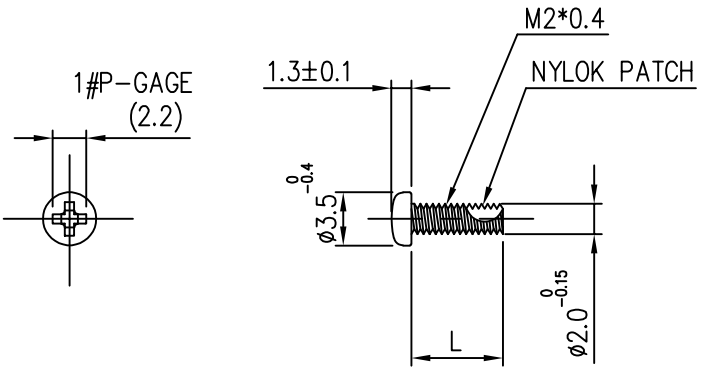

ITEM	PART NO.	PART NAME	Size L	toler	PLATING	APPROVED FILE No.	LOCATION	REMARK
2	3GSY2004P15	M2*0.4-4	4.0	-0.5	Ni			
1	3GSY2003P15	M2*0.4-3	3.0	-0.5	Ni	G0077		

MACHINE SCREW (PAN HEAD) + NYLOK/ 機械螺絲 (盤頭) + 耐落

5. 檢驗規範文件編號:QWI-018

4.NYLOK :

4-1.為美國NYLOK公司專利之防鬆螺絲塗層.

4-2.塗半圓周,留2牙不做;防鬆扭力:3Kg.

4-3.建議電動起子扭力設定<2Kg.

3.需脫脂去油.

2.電鍍處理膜厚 : 0.002-0.003mm

註 : 1.材質 : 1006

THIRD ANGLE PROJECTION	UNITS : mm	SCALE : 1 / 1	SHEET : 1 / 1	MODEL NO.: COMMON
	MATERIAL : SEE NOTES		TREATMENT : SEE NOTES	
DSGD by Ferris Tsai	2023/09/06	PART NAME: MACHINE SCREW (PAN HEAD)		
APPD by		PART NO.: SEE NOTES		VER. 0
APPD No. : SEE NOTES	FILE NAME : GSY20--P1--	DIVA Laboratories ,Ltd.		