

設計驗證
工程課
2023.09.26
發行
[illegible]科技開發股份有限公司

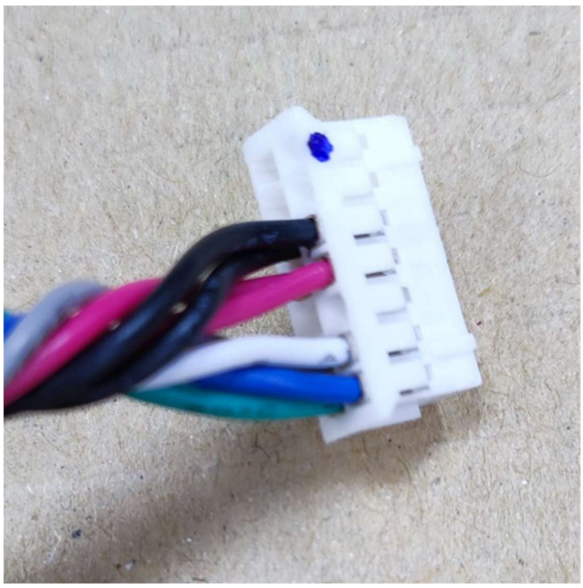

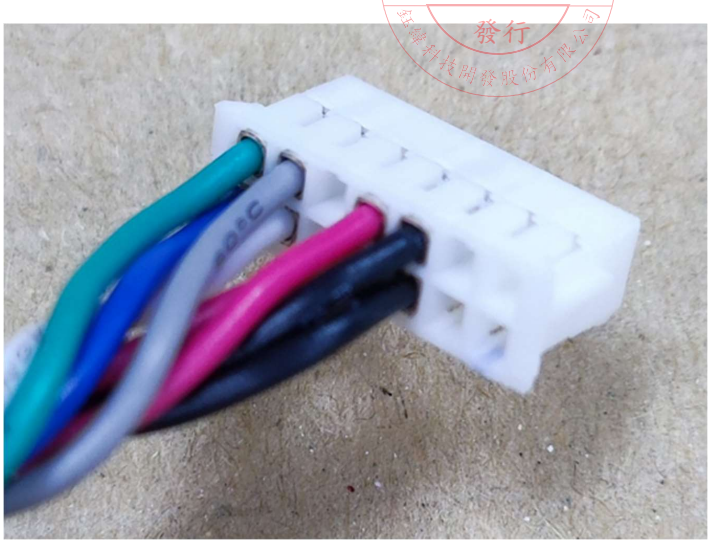

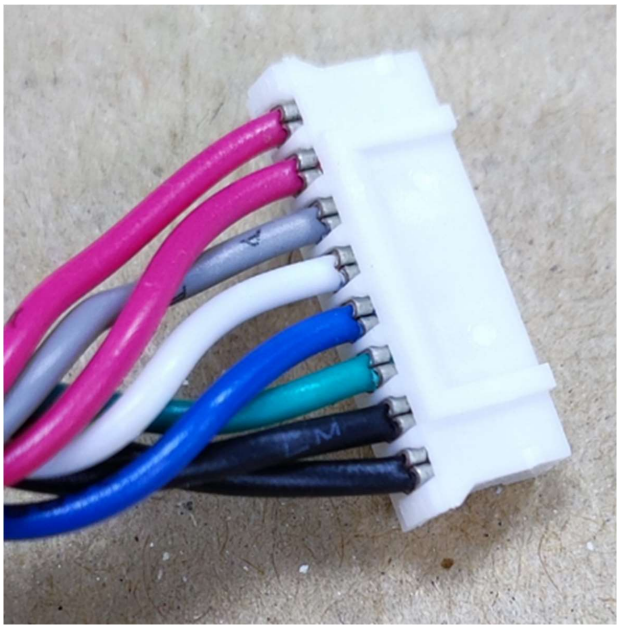



Henya

浙江恒亞電子科技有限公司

ZHEJIANG HENYA ELECTRONIC TECHNOLOGY CO., LTD.

承 認 書

SPECIFICATION FOR APPROVAL

客　戶 CUSTOMER	Qisda DIVA
品　名 PART NAME	WIRE HARNESS
佳世达料號 QISDA P/N	TY.5KD10.009
钰纬科技料號 DIVA P/N	3KH00286000 (K1149)
恒亞料號 HENYA P/N	LCDXXBA3019
UL 號 UL NO.	E156602
版本號 Version NO.	A
日 期 DATE	2023-9-21

客戶簽核 APPROVED BY CUSTOMER		
核準 Approved by	審核 Checked by	檢驗 Test by
設計驗證 工程課 2023.09.26 發行		

恒亞簽核 APPROVED BY HENYA		
核準 Approved by	審核 Checked by	制作 Designed by
9.21	9.21	陳心楠 9.21

地址：浙江省温州市瓯江口产业集聚区翼翔北路 27 号

ADD: no. 27, nixiang north road, oujiangkou industrial agglomeration zone, wenzhou city, zhejiang province

Tel :0577-86522888

Fax:0577-86528922

承认书版本说明
COMPONENT SPEC VERSION RECORD

佳世达料号： QISDA PART NO.		TY.5KD10.009	恒亚料号： HENYA PART NO.	LCDXXBA3019
版本 VER	发起人 APPLICANT	MINUTE OF CHANGES	HENYA CHECK	RELEASE DATE
A		新增版	陈心榆	2023-9-21

产品单重:15.48 ±10%(g) Produce Weight	环保要求: ☑ RoHS ☐ HF Environmental Protection Level	产品状态: ☑ 设计中 ☒ 已承认 Product Status Designing Approvaled	承认号: _____ App. sheet NO.	产品评审: ☑ 延伸产品 ☐ 新产品 Product review Extensibility products New product

无红磷

版本 REV	变更单号 ECN NO.	变更内容 DESCRIPTION	日期 TIME
A0		新图纸	2023-8-10
A1		修正线位图	2023-8-11

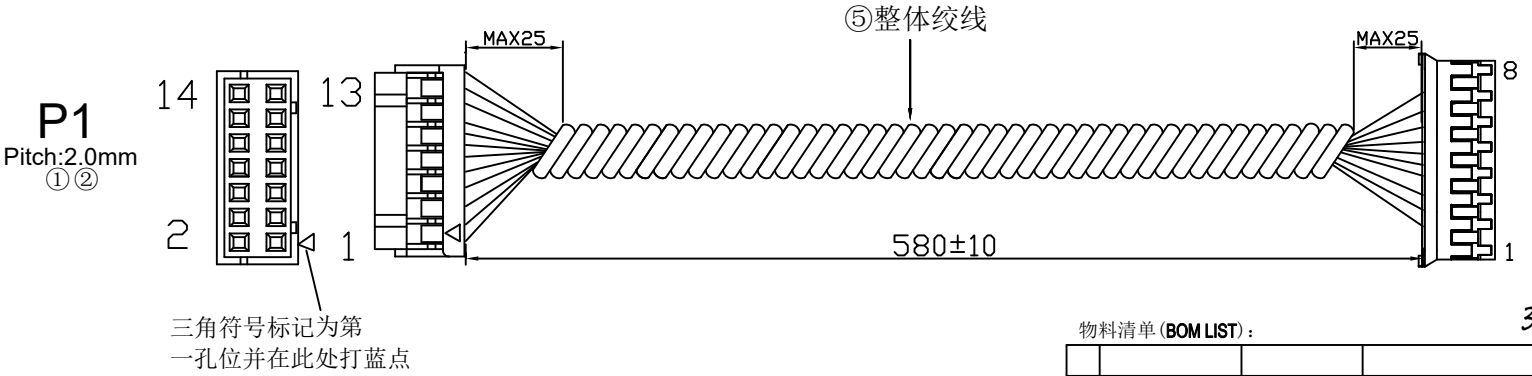

3KH00286000(K1149)

設計驗證 工程課 2023.09.26 發行 鈺緯科技開發股份有限公司

线位图(PIN DEFINE):

P1	1	2	3	4	5	6	7	8	9	10	11	12	13	14
颜色 COLOR	空 NG	空 NG	空 NG	空 NG	黑 Black	黑 Black	红 Red	红 Red	空 NG	空 NG	白 White	灰 Gray	蓝 Blue	绿 Green
P2					7	8	1	2			4	3	5	6
加工工艺 Processing Technic	整体绞线													
线号 AWG	UL1007 26AWG TS OD=1.3													
线长 Length	615													

物料清单(BOM LIST):

序号 NO.	材料名称	物料编码	名称	基本用量	辅助用量	同料多量	供应商	UL安规 UL FILE NO.	量产件	备注 Note
5	电子线(Wire)		UL1007 26AWG TS OD=1.3		615*8	1	XINYA	E170689 LL109915		否
5	电子线(Wire)		UL1007 26AWG TS OD=1.3		615*8	1	兴鸿豪	E315421		否
4	塑件(Housing)		JS-1124-08	1		1	CS	Connector JS-2007 (E113675)		否
2	塑件(Housing)		JS-2007-2*07	1		1	CS	Connector JS-2007 (E113675)		是
2	塑件(Housing)		D2006-2*7P	1		1	XINYA	E216870		是
3	端子(Terminal)		JS-1124-T	8		1	CS	Connector JS-2007 (E113675)		否
1	端子(Terminal)		D2006TOP.VA	8		1	XINYA			否
1	端子(Terminal)		JS-2007-T	8		1	CS	Connector JS-2007 (E113675)		否

注:1、机种(MODEL):
2、成品须100%电气测试,不得有短路、断路、错位等不良现象
3、HOUSING不得有任何杂色、缺胶、变色等不良
4、所有色线不紧绷

GENERAL TOLERANCE	
0~30	±1.5
31~100	±2.0
101~200	±3.0
201~	±4.0
ANGEL	±2° ☑

成品

Henya 浙江恒亚电子科技有限公司
ZHEJIANG HENYA ELECTRONIC TECHNOLOGY CO., LTD.

制图: DR.	单位 UNIT	mm	客户名称 CUSTOMER NAME: 鈺緯科技DIVA
校对: RWR.	比例 SCALE	Free	客户料号 CUSTOMER P/N: TY.5KD10.009
审核: CHK.	纸张 SIZE	A4	恒亚料号 HENYA P/N: LCDXXBA3019
核准: APP.	页次 SHEET	1 / 1	系统编码 SYSTEM P/N:
			初版日期 ORIGINAL DATE: 2023-8-10 版本 REV: A1



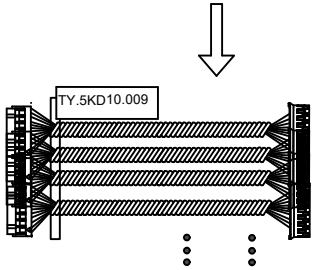

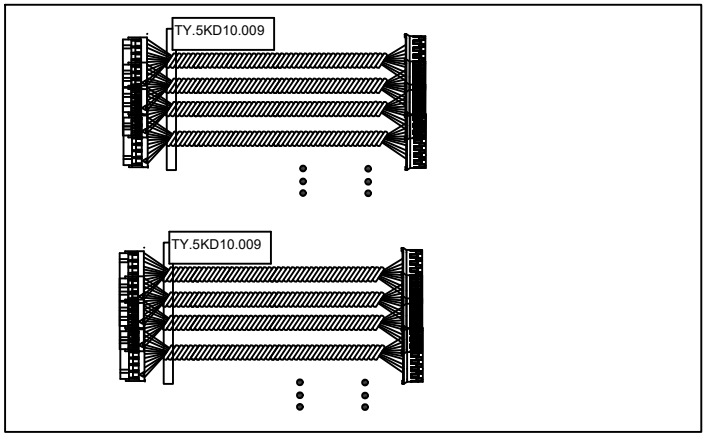

重量 weight(g)：15.48g
尺寸(最大值)
长(mm)：596
宽(mm)：0.16
高(mm)：0.16

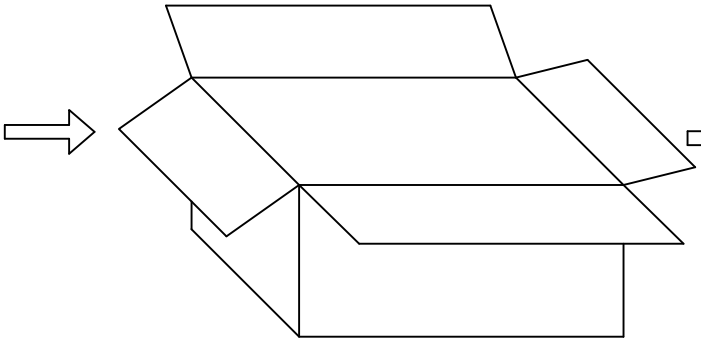

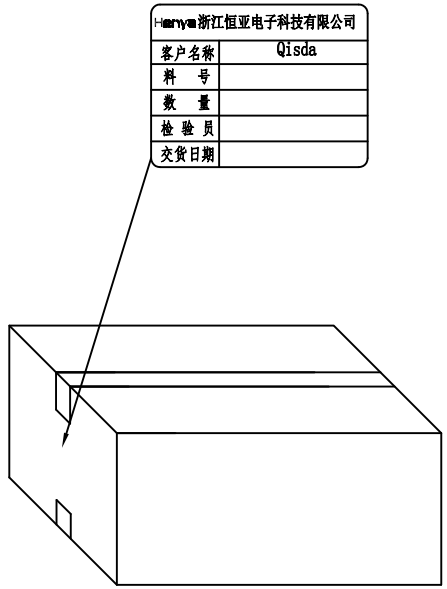

GENERL TOLERANCE	
0~30	±1.5
31~100	±2.0
101~200	±3.0
201~	±4.0
ANGEL	±2°
x.	±0.50
.x	±0.25
.xx	±0.15
.xxx	±0.10
ANGEL	±1°

Henya 浙江恒亚电子科技有限公司
ZHEJIANG HENYA ELECTRONIC TECHNOLOGY CO., LTD.

制图: DR. 叶斌	单位 UNIT	mm	客户名称 CUSTOMERNAME	Qisda	
审核: CHK.	比例 SCALE	Free	客户料号 CUSTOMER P/N	TY.5KD10.009	
核准: APP. 任潇	纸张 SIZE	A4	恒亚料号 HENYA P/N	LCDXXBA3019	
	页次 SHEET	1 / 1	初版日期 ORIGINAL DATE	2023-9-21	版本 REV A

附图A:

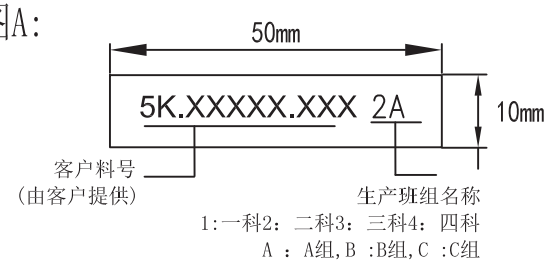

附图C:

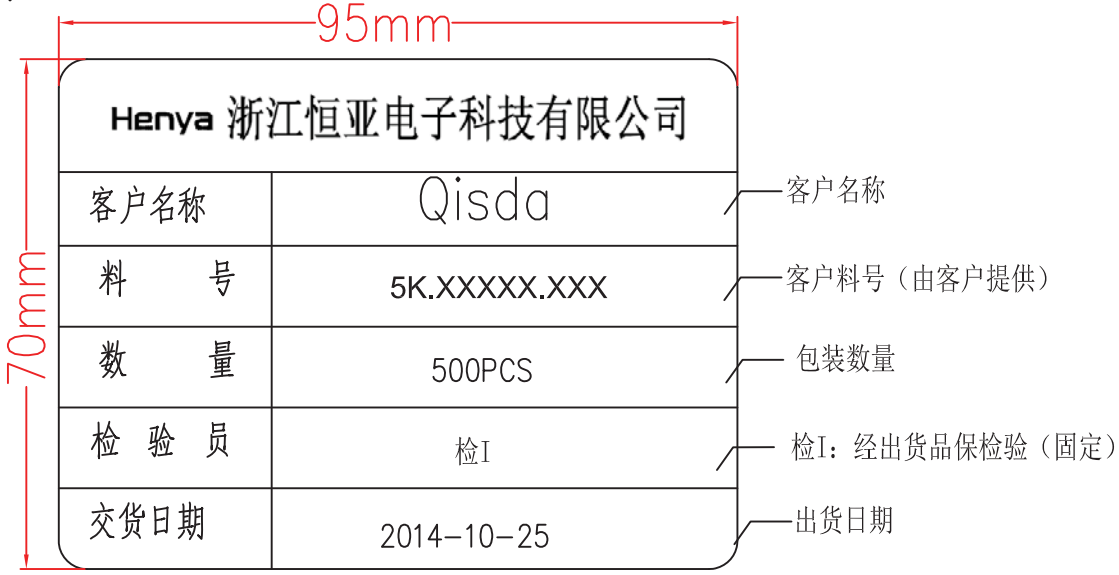

附图B:

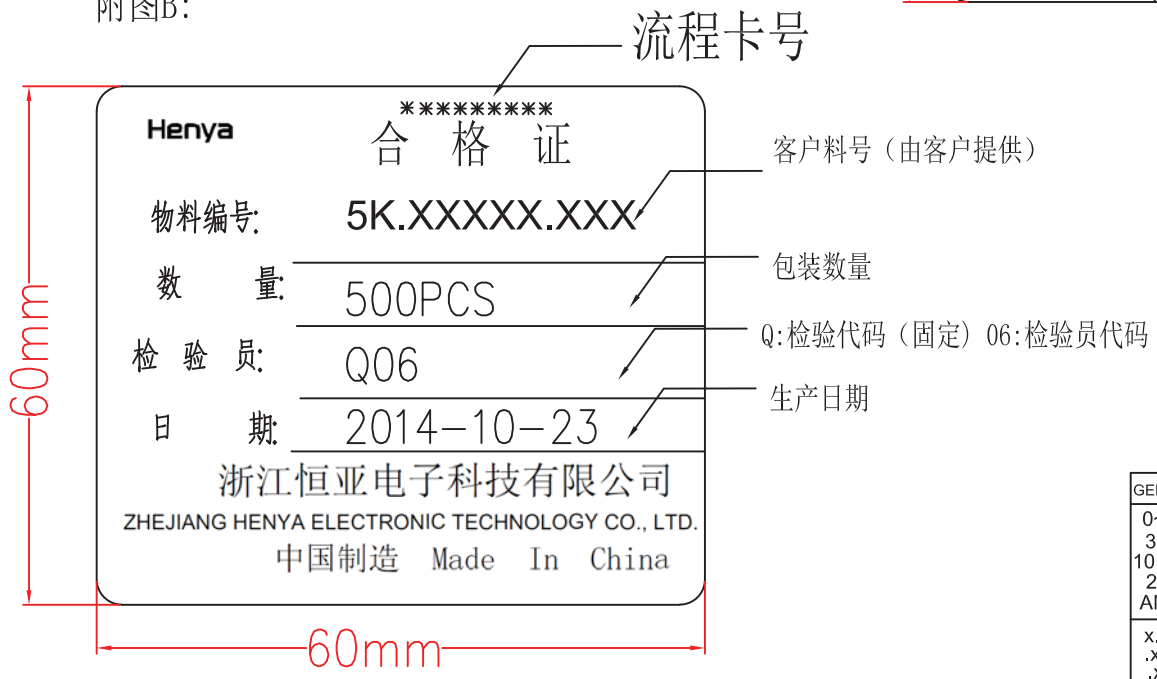

附图D:

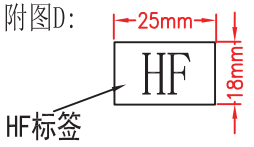

附图E:

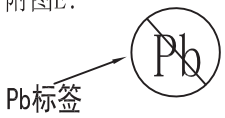

GENERAL TOLERANCE	Henya 浙江恒亚电子科技有限公司 ZHEJIANG HENYA ELECTRONIC TECHNOLOGY CO., LTD.				
0~30 ±1.5 31~100 ±2.0 101~200 ±3.0 201~ ±4.0 ANGE ±2°	制图: DR. 黄尚华	单位 UNIT	mm	客户名称 CUSTOMER NAME	佳世达
x. ±0.50 .x ±0.25 .xx ±0.15 .xxx ±0.10 ANGEL ±1°	校对: CHK.	比例 SCALE	Free	客户料号 CUSTOMER P/N	5K.XXXXX.XXX
	审核: CHK.	纸张 SIZE	A4	恒亚料号 HENYA P/N	
	核准: APP.	页次 SHEET	1 / 1	初版日期 ORIGINAL DATE	2014-10-23
				版本 REV	A

1. 目的：

为方便管理产品、提供方便性之统一指称，以便内部之管理及与客户之沟通。

2. 适用范围：凡浙江新亚电子科技有限公司，客户的产品均属之。

3. 名词解释：无

4. 技术部权责：

4.1.1 负责成品料号编码、管制。

4.1.2 负责成品料号核对与定义的归纳整理

4.1.3 负责产品料号增订时相关变更之事项。

4.1.4 负责将公司所有产品的料号，编码清册调整、整理等相关事宜。

5. 内容：

5.1 NB 部分：成品料号共 11 码(不含延伸码)，定义如下：

N	B	3	4	5	6	7	8	9	10	11	延伸码

第 1,2 码：产品大类，固定不变，为 NB 产品专用

第 3 码： 产品中类 0 --> 成品

第 4 码： 产品小类

C --> 同轴线（焊接 Hot-bar 制程）

T--> 铁弗隆线（焊接 Hot-bar 制程）

W --> 电子线（铆压端子制程）

注：

1.当产品使用同轴线焊接，并且也有铆端制程时，则定义为 C 类

2.当产品使用铁弗隆线焊接，并且也有铆端制程时，则定义为 T 类

3.NB 客户产品，无 Hot-bar 焊接制程的料号，则统一定义为 W 类

第 5,6 码： 为客户简称或字母拼音缩写，或客户 LOGO 中的两位英文字母，当同一客户有多家工厂时，第二位为工厂英文序号;但不出现不易识别“O”与“I”字母。详见(附表一)

第 7,8 码： 当时公元年份之末位两码，如：2002 年 即为 02

第 9,10,11 码：流水号（从 001~999，不够使用时可以从 A01~A99,B01~B99…依此类推）跨年度后，即重新由 001 开始编号。如：NB0CGD09001 在跨年度到 2010 后，新的产品即编码为 NB0CGD10001

5.2 非 NB 成品料号：成品料号共 11 码(不含延伸码)，定义如下：

1	2	3	4	5	6	7	8	9	10	11	延伸码

1~5 码：产品类别，不够用字母“X”表示，详见(附表二)

6~7 码：为客户简称或字母拼音缩写，或客户 LOGO 中的两位英文字母，当同一客户有多家工厂时，第二位为工厂英文序号; 但不出现不易识别“O”与“I”字母。详见(附表一)

8~11 码：流水号，从 0001~9999，不够用时再从 A001~A999、B001~B999…依此类推

5.3 FFC 成品料号：成品料号共12 码(不含延伸码)，定义如下：

F	1	2	3	4	5	6	7	8	9	10	11	延伸码

F 码: 成品类别代码：共1 码； F= FFC 软排线

1 码：PITCH：

A: 0.5mm B: 1.0mm C: 1.25mm D: 2.54mm E:0.4mm

2 码： 扁铜线规格：

1: Ct0.05 * Cw0.65 2: Ct0.035 * Cw0.65

3: Ct0.035 * Cw0.30 4: Ct0.05 * Cw0.30

5: Ct0.05 * Cw0.80 6: Ct0.1*Cw0.30

7: Ct0.1* Cw0.50 8: Ct0.05* Cw0.50

9: Ct0.075 * Cw0.575(郑力2019-2-22)

3~4 码：PIN 数：共 2 码 如：30 为30PIN

5 码：镀金：G 镀锡： T

6~7 码：客户代码例如 FOXCONN ：QC

8~11 码：共4 码（流水号0001~9999）

5.4 延伸码： 主要作用为界定成品须要符合环保的特定等级要求。

A: 若成品料号后无延伸码，则成品须符合RoHS 要求；

B: 若成品料号后延伸码为 –HF ，成品不仅须要符合RoHS 要求，同时须符合无卤素要求，即：溴 Br 和氯Cl 单项小于700PPM，合计小于1000PPM；

5.5 当RD 接到客户新料号时，于网络“\\192.168.20.60\恢复后技术部\技术部日常报表中心\20**年度技术部日常报表中心\日报\各客户成品料号编码清单”文件夹内登录新的料号，根据表单要求填写相关
的内容

5.6 技术部料号编辑人员，负责将新亚成品料号及相关信息登入ERP 系统。NB 产品在Notebook cable 内新增存货档案，将料件编号建入系统后，技术部人员通知各单位进行针对此新料号相关数据的维护。

5.7 ERP 内成品基础档案登入信息修改时，申请单位须填写《基础档案新增,修改,停用申请单》，经各单位人员会签核准后，由技术部料号编辑人员进行更新

6. 相关表单

6.1《基础档案新增,修改,停用申请单》

附表一

客户	代码	客户	代码	客户	代码	客户	代码
友达	AU	天津光电	GA	群创	QC	威星	WX
奥克斯	AX	广达	GD	全汉	H	温州	WZ
明基视讯	BA	歌尔声学	GE	仁宝	RB	维融电子	WR
明基打印机	BB	天津洪波	HB	仁聚	RJ	贤承	XC
明基 TV	BC	华富	HF	SCI	SC	浙江欣大	XD
明基多功能事务机	BD	和强迪讯	HQ	三花	SH	金尧	XH
贝尔佳	BJ	恒升	HS	尚盟	SM	星睿光电	XR
百特尔	BR	华硕、昌硕、和硕	HU	欧斯达	ST	博顿	XS
CCIG	CC	宁波华英伦	HY	烜炀	SY	宣威	XW
灿坤	CK	IMI	IM	福清冠捷	TA	XINYA	XY
创智城	CZ	捷克	JK	东方冠捷	TB	YAMAHA	YA
春晖智控	CH	精英	JY	武汉冠捷	TC	友诚	YC
达方	DA	钜正电子	JZ	苏州冠捷	TD	英业达	YD
马来西亚 DLYV	DL	凯博	KB	中坜飞合	TE	天津耀明	YM
东光大荣	DR	北京快达	KD	中和捷联	TF	宇晨	YU
德维比斯	DW	光宝	LA	宁波冠捷	TG	上海纵达	ZD
顶星	DX	联升（邦兴达）	LB	厦门乐捷	TH	智英	ZE
大众	DZ	联界	LJ	英冠达	TK	正泰	ZT
爱立信	ER	武汉力兴	LX	台湾表面黏着	TS	展运	ZY
富豪特	FH	美迪欧	MD	台湾冠捷	TW	浙江金利	JL
富士康	FS	美扬　(美星)	MY	维坊共达电讯	WF	捷星	TJ
方泰	FT	缤特力	PA	纬创	WT	古鳌	GU
丰源	FY	荣大昌	RC	融和	RH		

附表二

成品线材类别	代码
LVDS　Wire Harness 类	LVDSX
LCD　Wire Harness 类	LCDXX
POWER CORD 类	POWER
USB　CABLE 类 (USB1.0 1.1 2.0)	USBXX
USB　CABLE 类 (USB3.0)	USB30
RCA　CABLE 类	RCAXX
DC　CABLE 类	DCXXX
DVI　CABLE 类	DVIXX
RGB　CABLE 类	RGBXX
HDMI　CABLE 类	HDMIX
PANEL　CABLE 类	PANEL
D-SUB　CABLE 类	DSUBX
IDC　CABLE 类	IDCXX
RF　CABLE 类	RFXXX
LAN　CABLE	LANXX
接地线/跳线　类	PANEN
线路串并联复杂,机器内部混合线	ASSYX
IEEE1394　CABLE 类	IEEEX
测试用产品或者治具线，非正式量产	TESTX
备注：（同一机种出现多种类别组合时，以 PIN 位最多的类别编号）	

KUNSHAN XINGHONGMENG ELECTRONIC CO.，LTD
TEL:0512-50191998 FAX:0512-50191996
http://www.szshongmeng.cn

核准 APPROVED	审核 CHECKED	制作 DRAWING
STONE SHI	ADAM	NICOLE

规格承认书 Product Specifications

REV:1.0

规格SPECIFICATION:		UL 1007 30#TS～16#TS							
项目ITEM		规 格 SPECIFICATION							
导体 CONDUCTOR	线规AWG	30	28	26	24	22	20	18	16
	材质MATERIAL	镀锡铜 TINNED COPPER							
	尺寸COND.SIZE	7/0.100±0.008	7/0.127±0.008	7/0.160±0.009	11/0.16±0.009	17/0.16±0.009	26/0.16±0.009	41/0.16±0.009	26/0.254±0.009
绝缘 INSULATION	平均厚度 AverageThickness	0.38㎜							
	最小厚度 Min. Thickness	0.33㎜							
	材质MATERIAL	聚氯乙烯 PVC							
	OD外径(MM)	1.10±0.05	1.20±0.05	1.30±0.05	1.40±0.05	1.60±0.10	1.80±0.10	2.10±0.10	2.40±0.10
	颜色COLOUR	任意Optional							
Conductor Resistance: Max(Ω/Km,20℃)		381	239	150	94.2	59.4	36.7	23.2	14.6
印 字 MARKING		AWM 1007 E315421 VW-I 80℃ 300V XXAWG HONGMENG AWM I A FTI 80℃ 300V XXAWG LM							

电气性能ELECTRICAL CHARACTERISTICS

1. 额定值Rating : 温度TEMP： -10℃~80℃； 电压VOLTAGE 300V
2. 浸水耐压Dielectric-Withstand Test:2000V
3. 火花电压Spark Test:3000V

物理性能PHYSICAL CHARACTERISTICS

1. 抗张强度Tensile Strength: 1.05kgf/mm^2
2. 伸长率Elongation: Unaged: 100% min
3. 热冲击Heat shock test: 不开裂NO CRACKING
4. 低温弯曲Cold bend test:-15℃/1H 不开裂NO CRACKING
5. 加热变形Deformation test: MAX 50%
6. 燃烧测试Flame test: PASS VW-1

剖面图Cross - Sectional View :

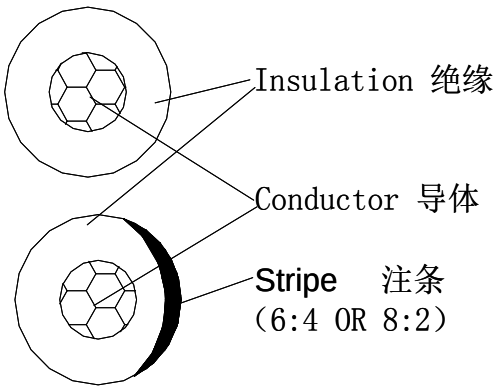

备 注 REMARK

设计卡号：D-0001

图号 PART NO.	HM160427003	客户承认 APPROVED BY	

材料安全数据表

1.物质识别号

物品名称:　镀锡单丝、并线及绞线

制造商或供货商名称/地址

震雄铜业集团有限公司/江苏省昆山市花桥镇花园路

紧急联络电话/传真电话

TEL:0512-57697318　　FAX:0512-57697618

2.危险识别号

最重要危害与效应

健康危害效应: 铜加工时所产生的铜粉会影响皮肤及呼吸道.

环境影响: 无

物理性及化学性危害: 无.

特殊危害: 无.

主要症状:无

物品危害分类:无

3.成分/组成信息

纯物质

中英文名称: 镀锡铜线(Tinned Copper wire)

成份%

物质名称	CAS 号码	EC 号码	含量(%)
Cu	7440-50-8	231-159-6	≥98.5

Se	7782-49-2	231-957-4	≤0.0002
Te	13494-80-9	236-813-4	≤0.0002
Bi	7440-69-9	231-177-4	≤0.0002
Sb	7440-36-0	231-146-5	≤0.0004
As	7440-38-2	231-148-6	≤0.0005
Pb	7439-92-1	231-100-4	≤0.0005
S	7704-34-9	231-722-6	≤0.0015
Fe	7439-89-6	231-096-4	≤0.001
Ag	7440-22-4	231-131-3	≤0.0025
O	7782-44-7	231-956-9	≤0.001
Sn	7440-31-5	231-141-8	≥1.3

危害物质成份(成份百分比): 无

混合物化学性质: 无

危害物质成份之中文名称	浓度或浓度范围(成份百分比)	危害物质分类及图式
无	无	无

4.急救措施

不同暴露途径之急救方法

吸入: 无

皮肤接触: 用水清洁

眼睛接触: 用水清洗 15 分钟,如仍感不适,询问医生.

食入: 呕吐之,如仍感不适,询问医生.

最重要症状及危害效应:无

对急救人员之防护:无

对医生之提示:无

5.消防措施

适用灭火剂：二氧化碳,化学干粉

灭火时可能遭遇之特殊危害：燃烧所产生之大量的有机气体,对人类会造成伤害

特殊灭或火程序：请戴供正压或正压全面行自携式呼吸防护具.

消防人员之特殊防护装备：穿戴防毒,防火之设备

6.泄露应急处理

个人应处理事项	环境注意事项	清理方法
无	无	无

7.处置与储存

处置：镀锡铜导体应注意与电源隔离，当发生火灾时应及时将导体旁边的电源切断。

储存：由于铜导电性优、露置在空气中会变色、在湿空气中表面变成绿色的碱式碳酸盐，故在储存时必须选择远离电源，对铜导体进行严密包装，温湿度相对干燥一些的环境，一般相对湿度在：60%--75%为宜。

8.接触控制与个人保护

工程控制：铜加工时应避免粉尘污染

控制参数：十二小时日时量平均容许浓度/短时间时量平均容许浓度/

最高容许浓度: N/A

生物指标: N/A

个人防护设备: 无

呼吸防护	手部防护	眼睛防护	皮肤及身体防护
无	铜加工时戴手套	无	无

9.物性及化学性质

物质状态	形状	气味	---	---
固态	圆柱形	无	---	---
物质	颜色	沸点/沸点范围	熔解温度	比重
铜	黄色	2595°C	1083°C	8.94
物质	颜色	沸点/沸点范围	熔解温度	比重
锡	银白色	2260°C	231.9°C	7.3

10 稳定性与反应性

安定性:稳定

特殊状况下可能致危害反应：通电后对动物会有触电反应及生命危害。

应避免之状况：裸露直接与电源接触，应避免放置在 180°C 以上的地方储存。

应避免之物质：与稀硝酸、热浓硫酸、热浓的氢溴酸、乙酸或其它有机酸反应。

11.毒性资料

急毒性:无

局部效应:无

致敏感性:无

慢毒性或长期毒性;无

特殊效应;无

12.生态资料

可能之环境影响/环境流布;无

13.废弃处置方法

废弃处置方法：废弃之铜线由冶炼厂回收利用。

14 运输资料

国际运送规定	联合国编号	国内运输规定	特殊运送方法及注意事项
无	无	无	无

15.规章

适用法规;无

16 其它资料

参考文献;无

品保专用章
震雄铜业集团有限公司

2015 年 01 月 11 日

物質安全資料表
MATERIAL SAFETY DATA SHEET(MSDS)

1 供應商資料 Supplier information

物品名稱 : Product Name 125 ℃ Irradiation cross-linked halogen-free low-smoke flame-retardant POE insulating compound

供應商名稱 : Supplier : Hebei Zhonglian Polymer Technology Development Co., Ltd.

地址 : address : the Hot spring Zone , Xiong County, Baoding , Hebei , China

電話 : Tel 0312- 5301555

緊急聯絡人: Emergency contact Wang Chao | 電話: Phone 0312-5301555 | 傳真: Fax 0312-5811676

2 成份辨識資料 composition /information on ingredients

中英文名稱 :

Major hazardous substance			化學文摘社登記號碼 CAS NO:	濃度或濃度範圍(成份百分比)			危害物質分類及圖示 variety and illustration of Hazardous substance
Ingredients	化學式 (Chemical equation)	Percent(%)		時量平均容許濃度 TWA	短時間時量平均容許濃度 STEL	最高容許濃度 CEILING	
聚乙烯	┤CH2-CH2├n	25	9002-88-4				NO
乙烯-醋酸乙烯酯共聚物	C18H30O6X2	28	24937-78-8				NO
氢氧化铝	AL(OH)3	43	21645-51-2				NO
抗氧剂	C73H108O12	2	6683-19-8				NO
交联剂	C24H41N3O6	2	64265-57-2				NO
							NO

3 危害辨識資料與急救措施Hazards Identification and first aid measures

最重要危害效應 Major hazardous effect

健康危害效應: Adverse Human Health Effects : Does not affect the body health

環境影響: Environmental effects ：Thermal decomposition, producing

物理性及化學興危害: Physical and Chemical Hazards：NO

特殊危害: Specific Hazards :NO

主要症狀: Major symptom ：When it is heated A stimulating odour

hazardous substances

4 急救措施

急救措施Accidental Release Measures

不同暴露途徑之急救方法: Emergency measures to different exposures

最重要危害效應: Major hazardous effect

對急救人員防護: Protection of First aiders

對醫師之提示: Notes to Physician

5 滅火措施 Fire - Fighting measures

適用滅火器: Applicable File Extinguisher ：dry chemical powder, foam,CO2

滅火時可能遭遇特殊危害: Possible Accident during Fire-Fighting ：When burning the CO2 and water cause burns ,

colloidal particlesthe scene

消防人員之特殊防護設備: Special Equipment for the Prection of Firefighters

6	洩漏處理方法 Disposure of leakage	個人應注意事項: Personal Precautions : Restrict enter into, until it is cleaned
		環境注意事項: Environmental Precautions : Remove all the flash source
		清理方法: Methods for Cleaning Up： mix leak content with dry, clean containers, Stamp and sign
7	安全處置與儲存方法 Handling and Storage	處置: Handling ： 1. Disposal of homework prevent falling 2. Processing work to avoid being fused burns ；
		儲存: Storage ： 1. Avoid storing in near the fire 2. Pay attention to waterproof

8	暴露預防措施 Exposure Controls /Personal Protection	工程控制: Engineering Measures ：	
		參數控制: Control Parameters ：无	
		個人防護設備: Personal Protective Equipment	
		呼吸防護: Breath Measures ： Under the confined Spaces, suitable to wear	眼睛防護: eye protecting ： wear a mask
		手部防護: Hand Measures ：Equipped with heat-proof gloves	皮膚及身體防護: skin /body protecting
		衛生措施: Hygiene Measures ： NO	Wear the corresponding obligations when necessary
9	物理及化學性質 Physical and chemical properties	物質狀態: Physical State ： solid	形狀: Form: particle
		顏色: color : White	氣味: Odor : NO
		PH值: PH :4.3	沸點/沸點範圍: Boiling Point /Boiling Range:
		分解溫度: Decomposition Temperature: NO	閃火點: Flash Point NO
			測試方法: Testing Methods NO
		自然溫度 Nature Ignition Temperature:NO	爆炸界限: Explosion Limit NO
		蒸氣壓: Vapor Pressure:NO	蒸氣密度: Vapor Density NO
		密度: Density :1.45g/cm3	溶解度: Solubility: insolubility
10	安定性及反應性 Stability and Reactivity	安定性: stability ：Under normal condition, the product is stable	
		than 518℃	
		or will produce the smell of the decomposition	
		應避免狀況: Conditions to Avoid: Strong oxidant, acid,and the Storage temperature shall not be higher than not higher than 270 ℃	
		應避免之物質: Materials to Avoid : organic solvent ,Strong oxidant, acid, alkali	

		危害分解物: Hazardous Decomposition Products:CO2,CO , H2O	
11	毒性資料 Toxicological Information	急毒性: Acute toxicity : EVA sourness stimulate the respiratory system	致敏感性: Sensitization :NO
		局部效應: Local effects : Contact with the melt will be burned	
		慢毒性或長期毒性: Chronic Toxicity or Long Term Toxicity : NO	
		特殊效應: Specific effects :NO	
12	生態資料 Ecological Information	可能環境影響/環境流佈Possible Environmental Effects,Behavior and Fate: NO	
13	廢棄處置方法 Disposal Considerations	廢棄處置方法Disposal Considerations: 1. Refer to the current laws and regulations before processing 2. Can take on some landfill, incineration treatment measures	
14	運送資料Transport Information	國際運送規定International regulations	
		聯合國編號:UN classification number	
		國內運送規定Domestic regulations:	
		特殊運送方法及注意事項Specific Precautionary Transport Measures and Conditions:	
15	法規資料 Regulatory Information	適用法規Applicable Regulations: : According to international shipping regulations processing measures ,such as DOT IATA/ICA .IMDG	
16	Other Info 其它信息	參考文獻 Literature Reference:According to the supplier's material safety data	
		製表單位:	名稱: Company : Hebei Zhonglian Polymer Technology Development Co.,
			地址/電話: address/phone : the Hot spring Zone , Xiong County, Baoding , Hebei , China
		製表人Drafted by:	職稱Job title: manager of technical department / 姓名name: Wei Hejun
		製表日期Draft date:	2015-12-11

SPECIFICATION FOR APPROVAL

SPECIFICATION:	UL 1007 28#TS～16#TS

ITEM		SPECIFICATION							
CONDUCTOR	AWG	28	26	24	22	20	18	16	/
	MATERIAL	tinned copper wire							
	COND.SIZE	7/0.127 ±0.008	7/0.160 ±0.009	11/0.160 ±0.009	17/0.160 ±0.009	26/0.160 ±0.009	41/0.160 ±0.009	26/0.254 ±0.009	/
INSULATION	Nominal Thickness	0.38mm							
	Min. Thickness	0.33mm							
	MATERIAL	PVC							
	OD	1.20 ± 0.05	1.30 ± 0.05	1.40 ± 0.05	1.60 ± 0.10	1.80 ± 0.10	2.10 ± 0.10	2.40 ± 0.10	/
Conductor Resistance: AT 20℃ Max(Ω/Km,20℃)		239	150	94.2	59.4	36.7	23.2	14.6	/

CONSTRUCTION D.W.G

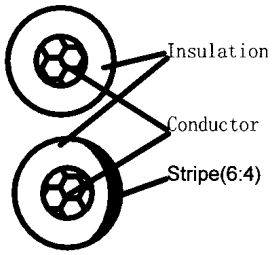

COLOUR CODE:

Optional

MARKING

AWM 1007 E170689 VW-1 80℃ 300V XXAWG XINYA
CSA AWM I A LL109915 FT1 80℃ 300V XXAWG -F- LM

REMARK

Single Stripe Proportion（6：4）

ELECTRICAL CHARACTERISTICS

1. Rating :TEMP 80℃ ; VOLTAGE 300V
2. Dielectric-Withstand Test:2000V
3.Spark Test:3000V

PHYSICAL CHARACTERISTICS

1.Tensile Strength: Unaged: 1.05kgf/mm^2
2. Elongation: Unaged: 100% min
3. Heat Shock Test: NO CRACKING
4. Cold Bend Test: NO CRACKING
5. Deformation Test: MAX 50%
6. Flame Test: PASS VW-1

Xinya XINYA ELECTRONIC CO., LTD
TEL:86-0577-62866888 FAX:86-0577-62865999
http://www.xinya-cn.com

PART NO.		SP0706012	
APPROVED	Hong Fei	CUSTOMER	
CHECKED	Stone Gui	APPROVED BY	
DRAWING	Guan Hong		

新亚电子股份有限公司

物质安全资料表（MSDS）

一、 物品与厂商资料

物品名称	镀锡铜线
联系地址	中国浙江省乐清市温州大桥工业园区
紧急联络电话	TEL：86-0577-62866887　　FAX：86-577-62865999

二、 产品成分辨别资料

混合物

中英文名称：铜（Copper Wire）、纯锡（Tin）

物质名称	CSA 号码	EC 号码	含量 （%）
Cu	7440-50-8	231-159-6	≥98.653%
Se	7782-49-2	231-957-4	≤0.0002%
Te	13494-80-9	/	≤0.0002%
Bi	7440-69-9	231-177-4	≤0.0002%
Sb	7440-36-0	231-146-5	≤0.0004%
As	7440-38-2	231-148-6	≤0.0005%
Pb	7439-92-1	/	≤0.0005%
S	7704-34-9	231-722-6	≤0.0015%
Fe	7439-89-6	231-096-4	≤0.001%
Ag	7440-22-4	231-131-3	≤0.0025%
O	7782-44-7	231-956-9	≤0.04%
Sn	7440-31-5	231-141-8	≤1.3%

三、 危害辨识资料

健康危害效应：铜加工时所产生的铜粉会影响皮肤及呼吸道.

环境影响：无

物理性及化学性危害：无

特殊危害：无

四、 急救措施

皮肤接触：用水或肥皂清洗

眼睛接触：用水清洗15 分钟,如仍感不适,询问医生.

吸入：不适用

摄入：呕吐之,如仍感不适,询问医生.

五、 消防措施

适用灭火剂： 泡沫灭火器、干粉灭火器

灭火时可能遭遇之特殊危害： 燃烧所产生大量的有机气体,对人类会造成伤害.

特殊灭火程序：请戴正压或正压全面行自携式呼吸防护具.

消防人员之特殊防护设备：穿戴防毒、防火之设备.

六、 泄露处理方法

个人应注意事项：无

环境预防措施：避免污染环境

清理方法：回收再变卖处理

七、 操作处置与储存

操作处置：应注意与电源隔离,当发生火灾时应及时将导体旁边的电源切断.
储存：由于铜导电性优,露置在空气中会变色,在湿空气中表面变成绿色的碱式碳酸盐,故在储存时必须选择远离电源,对铜导体进行严密包装,温湿度相对干燥一些的环境,一般相对湿度在60-70%为宜.

八、 接触控制和个人防护

工程控制：无
个人防护措施：
呼吸防护：戴口罩
手部防护：戴手套
眼睛防护：戴专用眼镜
卫生措施：无

九、 物理及化学物质

物质状态：固体
形状：圆柱形
颜色：金黄色、白色
气味:无
沸点：铜2595℃、锡2260℃
比重：8.9g/cm^3
分解温度：常温下不会分解
自燃温度：常温下不自燃

十、 安定性及反应性

安定性：稳定
特殊状况下可能之危害反应：通电后对动物会有触电反应及生命危害.
应避免的物质：与稀硝酸、热浓硫酸、热浓的氢溴酸、乙酸或其它有机酸反应.
应避免之状况：裸露直接与电源接触,应避免放置在 180℃以上的地方储存.
危害分解物：无

十一、 毒性资料

无毒

十二、 生态资料

可能之环境影响/环境流布：无

十三、 废弃处置方法

废弃处置方法：1.收集并作变卖处理。2.放置通风良好之地方。

十四、 运送资料

国内运送规定：确保运送过程中安全

十五、 法规资料

SONY SS-00259、RoHS2.0

十六、 其它资料

参考文献	无	
制表单位:	新亚电子股份有限公司	品质保证部
制表人:	职称：品质代表	姓名：薄[illegible]红
制表日期	2022 年 8 月 11 日	公司品质中心

新亚电子股份有限公司

材质证明

我公司镀锡铜主要材料组成如下：

制品构成	含量（%）
Cu	≥98.653%
Se	≤0.0002%
Te	≤0.0002%
Bi	≤0.0002%
Sb	≤0.0004%
As	≤0.0005%
Pb	≤0.0005%
S	≤0.0015%
Fe	≤0.001%
Ag	≤0.0025%
O	≤0.04%
Sn	≤1.3%

特此说明

新亚电子股份有限公司

研发中心

2022 年 5 月

REV	ECN.NO.	REVISIONS	REV.DRAWN	DATE
F		修正卡点尺寸	CARRY	08-04/21
G		增加无卤料料号说明	Yuqilong	2008/11/19
H		增加2X18-2X20规格	Xu	09-04/28
I		增加2X21-2X25规格	Asimo	10-02/23
J		修正编码原则	YangSong	16-12/12

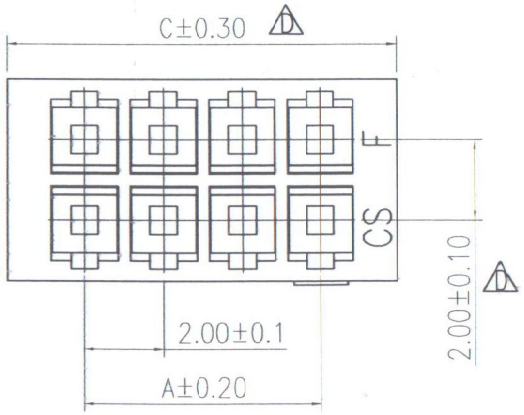

SPECIFICATIONS

. Rated Voltage : 250V AC/DC
. Rated Current : 3A AC/DC
. Withstanding Voltage : 800V AC/minute
. Insulation Resistance ; 1000M Ω min
. Temperature Range : -25°C to +85°C
. Contact Resistance : 20m Ω max

HOUSING

. Part No. : JS-2007-2xXX XX-XX
. Poles : 2X02~2X25
Color: Blank: nature
BK: black
Blank:Normal
NH:Non-halogen
. Material : Nylon66 UL 94V-0
. Q'ty : 1,000 pcs/Bag

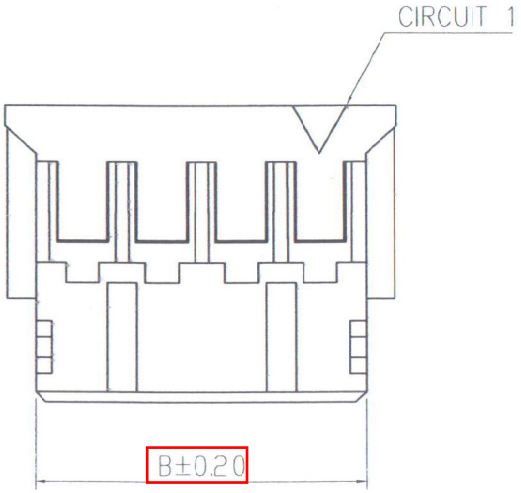

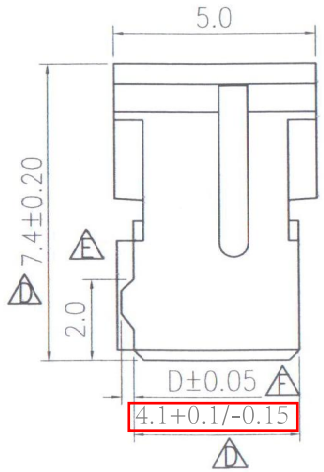

PART NO.	DIMENSIONS			
JS-2007-XX	A	B	C	D
JS-2007-2X02	2.00	4.35	5.90	0.30
JS-2007-2X03	4.00	6.35	7.90	0.30
JS-2007-2X04	6.00	8.35	9.90	0.20
JS-2007-2X05	8.00	10.35	11.90	0.20
JS-2007-2X06	10.00	12.35	13.90	0.20
JS-2007-2X07	12.00	14.35	15.90	0.20
JS-2007-2X08	14.00	16.35	17.90	0.20
JS-2007-2X09	16.00	18.35	19.90	0.20
JS-2007-2X10	18.00	20.35	21.90	0.20
JS-2007-2X11	20.00	22.35	23.90	0.20
JS-2007-2X12	22.00	24.35	25.90	0.20
JS-2007-2X13	24.00	26.35	27.90	0.20
JS-2007-2X14	26.00	28.35	29.90	0.20
JS-2007-2X15	28.00	30.35	31.90	0.20
JS-2007-2X16	30.00	32.35	33.90	0.20
JS-2007-2X17	32.00	34.35	35.90	0.20
JS-2007-2X18	34.00	36.35	37.90	0.20
JS-2007-2X19	36.00	38.35	39.90	0.20
JS-2007-2X20	38.00	40.35	41.90	0.20
JS-2007-2X21	40.00	42.35	43.90	0.20
JS-2007-2X22	42.00	44.35	45.90	0.20
JS-2007-2X23	44.00	46.35	47.90	0.20
JS-2007-2X24	46.00	48.35	49.90	0.20
JS-2007-2X25	48.00	40.35	51.90	0.20

出图 2016.12.13 工程部

X.± 0.50	X°± 5.0°	UNITS mm	NAME(INTENDED USE) CUSTOMER
.X± 0.30	.X°± 2.0°	MAT'L	CHYAO SHIUNN ELECTRONIC (SHANGHAI) CO.,LTD.
.XX± 0.20	.XX°± 1.0°		PART NO.(INTENDED USE) JS-2007-2xXX-XX
.XXX± 0.10	.XXX°± 0.5°	FINISH	TITLE: 2.00mm Crimp Style Connector
THESE DRAWINGS AND SPECIFICATIONS ARE THE PROPERTY OF CHYAO SHIUNN ELECTRONIC CO., LTD. AND SHALL NOT BE REPRODUCED. COPIED OR USED IN ANY MANNER WITH-OUT THE PRIOR WRITTEN CONSENT OF CHYAO SHIUNN ELECTRONIC CO., LTD.		Q'TY	APPD: liuzhiwen 10-02/23 DWG NO.: 020-0032-2007-XX
			CHKD: Y.H.Zhang SCALE 2:1 SHEET 1/1 REV. J
			DR: XU 09-04/28

符合环境管理物质

REV	ECN.NO.	REVISIONS	REV.DRAWN	DATE
B	07134	更改尺寸公差	YU	07-12/17
C		增加膜厚测点	hejihuai	09-04/21
D		增加电镀规格	hejihuai	09-12/08
E	10034	修改1.0尺寸公差	Asimo	10-03/26

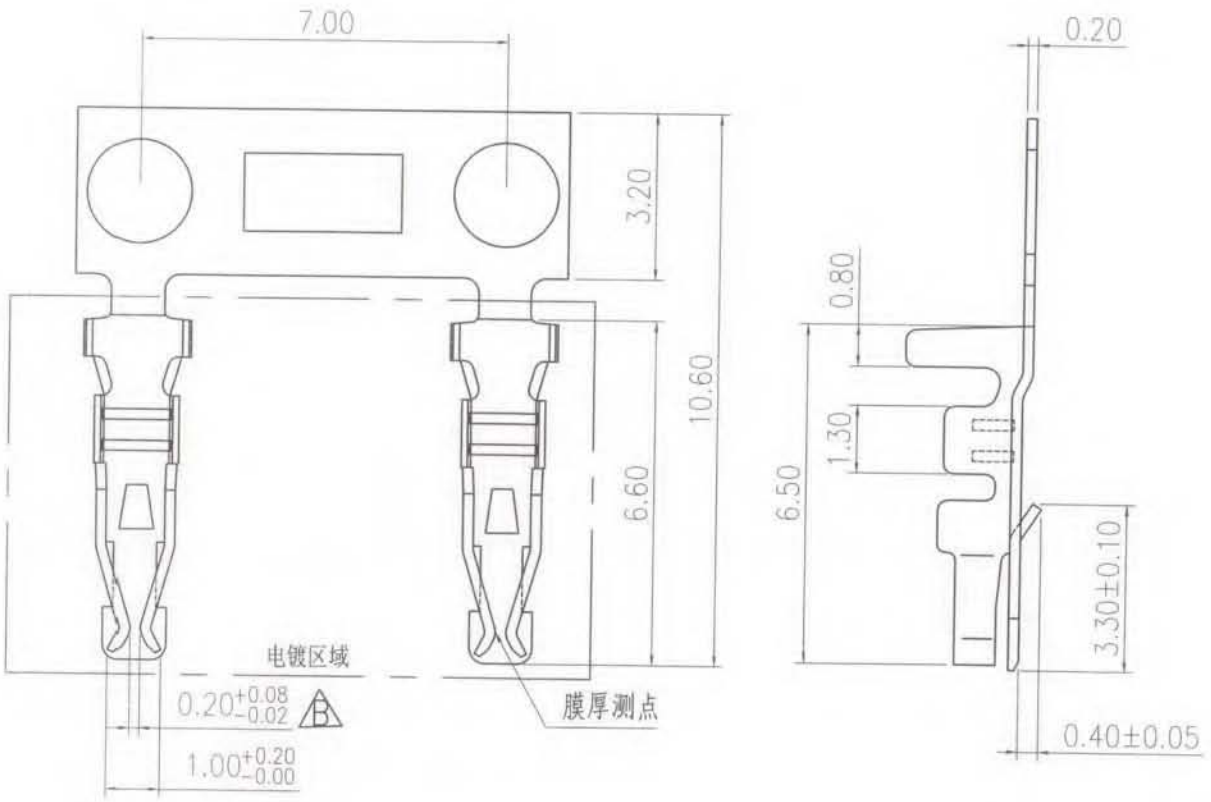

SPECIFICATIONS

- Voltage Rating : 250V AC/DC
- Current Rating : 3A AC/DC
- Withstanding Voltage : 800V AC/Minute
- Insulation Resistance : 1000M Ω min.
- Temperature Range : −25°C to +85°C
- Contact Resistance : 20m Ω max.

TERMINAL

- Part No. : JS-2007-TXX
  - Blank: Tin Plated
  - G0: Gold Plated
- Applicable Wires: AWG#22-28
- Material : Copper Alloy
- Finish: Tin Plated/Gold Plated
- Thickness: 0.2mm
- Q'ty : 10,000 pcs/Reel

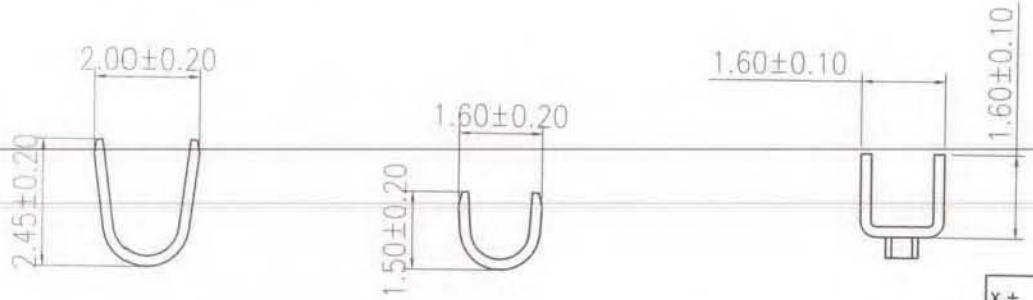

出图
2010.3.26
工程部

符合环境管理物质

Sn≥50u" Ni≥10u"

X.± 0.30	X°± 5.0°	UNITS mm	NAME(INTENDED USE) CUSTOMER
.X± 0.15	.X°± 2.0°	MAT'L	PART NO.(INTENDED USE) JS-2007-T
.XX± 0.07	.XX°± 1.0°	FINISH	APPD:
.XXX± 0.03	.XXX°± 0.5°	Q'TY	CHKD: 3/26/10
			DR: HEJIHUAI 09-04/21

THESE DRAWINGS AND SPECIFICATIONS ARE THE PROPERTY OF CHYAO SHIUNN ELECTRONIC CO., LTD. AND SHALL NOT BE REPRODUCED, COPIED OR USED IN ANY MANNER WITHOUT THE PRIOR WRITTEN CONSENT OF CHYAO SHIUNN ELECTRONIC CO., LTD.

CHYAO SHIUNN ELECTRONIC (SHANGHAI) CO.,LTD.

TITLE: WIRE TO BOARD CONNECTOR

DWG NO.: 020-0034-2007-T

SCALE	SHEET	REV.
2:1	1/1	E

喬訊電子工業股份有限公司
CHYAO SHIUNN ELECTRONIC INDUSTRIAL LTD.
5FL, #168, JUNG SHIAU RD., PA-LI HSIAN,
TAIPEI HSIEN, TAIWAN, R.O.C.
TEL: 886-2-26105266(REP) FAX: 886-2-26101558
http://www.chyaoshiunn.com.tw E-mail:cs@chyaoshiunn.com.tw

Type Document	Product Specification	Revised /Edition	P
Date Issued	2005/05/20	Data Revised	2016/11/07
Subject: JS-2007/T JS-2008/A/B/V JS-2008R/RA Pitch 2.00mm Double-Row DIP/SMT Series Wire to Board Connector			Issued By: Engineering Dept.

This specification is referred to the 2.00mm

Double-row DIP/SMT series wire to board connector.

-INDEX-

1.0 Product Name/Part Number & Drawing Number.

2.0 Construction/Dimensions/Material & Surface Finish.

3.0 Characteristic.

4.0 Specimen.

5.0 Applicable Standards.

6.0 Mechanical Performance.

7.0 Electrical Performance.

8.0 Environmental Performance.

9.0 Insertion Force & Retention Force Requirement.

10.0 Remark.

喬訊電子工業股份有限公司
CHYAO SHIUNN ELECTRONIC INDUSTRIAL LTD.
5FL, #168, JUNG SHIAU RD., PA-LI HSIAN,
TAIPEI HSIEN, TAIWAN, R.O.C.
TEL: 886-2-26105266(REP) FAX: 886-2-26101558
http://www.chyaoshiunn.com.tw E-mail:cs@chyaoshiunn.com.tw

Type Document	Product Specification	Revised /Edition	P
Date Issued	2005/05/20	Data Revised	2016/11/07
Subject: JS-2007/T JS-2008/A/B/V JS-2008R/RA Pitch 2.00mm Double-Row DIP/SMT Series Wire to Board Connector			Issued By: Engineering Dept.

1.0 Product Name/Part Number & Drawing Number:

Product Name		Part Number	Drawing Number
Terminal		JS-2007-T	JS-2007-T
Housing		JS-2007	JS-2007-xx
Wafer	Straight(DIP)	JS-2008	JS-2008-xx JS-2008B-XX
	Straight(SMT)	JS-2008V	JS-2008V-xx
	Right Angle	JS-2008R	JS-2008R-xx
		JS-2008RA	JS-2008RA-xx

Note: (xx) The number of the circuits.

2.0 Construction/Dimensions/Material & Surface Finish:

Construction and dimensions shall be in accordance with the referenced drawing.
Material and surface finish shall be specified as listing.

Part Name		Material	Surface Finish
Terminal		Phosphor Bronze	Tin-Plated
Housing		Nylon 66	UL 94V-0
Wafer	Post	Brass	Tin-Plated
	Base	Nylon 66+GF/PPA/PA46	UL 94V-0
	Cap	PA9T	UL 94V-0

喬訊電子工業股份有限公司
CHYAO SHIUNN ELECTRONIC INDUSTRIAL LTD.
5FL, #168, JUNG SHIAU RD., PA-LI HSIAN,
TAIPEI HSIEN, TAIWAN, R.O.C.
TEL: 886-2-26105266(REP) FAX: 886-2-26101558
http://www.chyaoshiunn.com.tw E-mail:cs@chyaoshiunn.com.tw

Type Document	Product Specification	Revised /Edition	P
Date Issued	2005/05/20	Data Revised	2016/11/07
Subject: JS-2007/T JS-2008/A/B/V JS-2008R/RA Pitch 2.00mm Double-Row DIP/SMT Series Wire to Board Connector			Issued By: Engineering Dept.

3.0 Characteristic:

Item		Standard	
3.1	Rated Current	3A AC/DC (With AWG #24 is applied)	
3.2	Rated Voltage	250V AC/DC	
3.3	Ambient Temperature Range	-25℃~+85℃	
3.4	Applicable Wire	3.4.1	Conductor Construction Size: AWG #22~#28
		3.4.2	Wire Insulation O.D.: 0.9mm ~ 1.5mm
3.5	Applicable Printed Circuit Board (PCB)	3.5.1	Thickness: 0.8 mm ~ 1.6 mm
		3.5.2	Hole Size: 0.85 ± 0.05 mm
		3.5.3	Hole Pitch: 2.00 ± 0.05 mm

4.0 Specimen:

Part Name		Part Number	Picture or Photograph
Contact		JS-2007-T	
Housing		JS-2007-xx	
Wafer	Straight(DIP)	JS-2008-xx JS-2008A/2008B-xx	
	Straight(SMT)	JS-2008V-xx	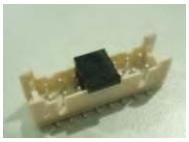
	Right Angle	JS-2008R-xx JS-2008RA-xx	

喬訊電子工業股份有限公司
CHYAO SHIUNN ELECTRONIC INDUSTRIAL LTD.
5FL, #168, JUNG SHIAU RD., PA-LI HSIAN,
TAIPEI HSIEN, TAIWAN, R.O.C.
TEL: 886-2-26105266(REP) FAX: 886-2-26101558
http://www.chyaoshiunn.com.tw E-mail:cs@chyaoshiunn.com.tw

Type Document	Product Specification	Revised /Edition	P
Date Issued	2005/05/20	Data Revised	2016/11/07
Subject: JS-2007/T JS-2008/A/B/V JS-2008R/RA Pitch 2.00mm Double-Row DIP/SMT Series Wire to Board Connector			Issued By: Engineering Dept.

5.0 Applicable Standards:

MIL-STD-202 Methods by test of connectors for electronic equipment.

MIL-STD-1344 Test methods for electrical connectors.

6.0 Mechanical Performance:

Item		Test Condition		Requirement
6.1	Insertion & Retention Force	Insert and withdraw with connectors at the speed rate of 25mm/minute. (EIA/ECA 364-13D)		Refer to paragraph 9.1
6.2	Crimp Tensile Strength	Pull with contact terminal at the speed rate of 25mm/minute.	AWG#22 size wire	3.63kgf/Min.
			AWG#24 size wire	2.73kgf/Min.
			AWG#26 size wire	1.82kgf/Min.
			AWG#28 size wire	0.91kgf/Min.
6.3	Contact Retention Force	Withdraw with contact terminal at the speed rate of 25mm/minute.		1.5kgf/Min.
6.4	Post Retention Force	Use a tension gauge to press the post at the speed rate of 25mm/minute. (EIA 364-29C)		Per Contact 1.0kgf/Min.
				After Soldering Heat Per Contact 0.4kgf/Min

喬訊電子工業股份有限公司
CHYAO SHIUNN ELECTRONIC INDUSTRIAL LTD.
5FL, #168, JUNG SHIAU RD., PA-LI HSIAN,
TAIPEI HSIEN, TAIWAN, R.O.C.
TEL: 886-2-26105266(REP) FAX: 886-2-26101558
http://www.chyaoshiunn.com.tw E-mail:cs@chyaoshiunn.com.tw

Type Document	Product Specification	Revised /Edition	P
Date Issued	2005/05/20	Data Revised	2016/11/07
Subject: JS-2007/T JS-2008/A/B/V JS-2008R/RA Pitch 2.00mm Double-Row DIP/SMT Series Wire to Board Connector			Issued By: Engineering Dept.

7.0 Electrical Performance:

Item		Test Condition	Requirement
7.1	Contact Resistance	A maximum voltage of 20mV and a maximum current of 10mA are applied to the Mate connectors. (EIA/ECA 364-23C)	Contact Resistance: 20 milliohms Max.
7.2	Current Continuity	Each circuit of the connector shall be connected in series. Continuity meter shall inspect current discontinuity.	No discontinuity current is longer than 1 microsecond.
7.3	Insulation Resistance	Apply 500V D/C to any two adjacent contacts to measure the insulation resistance. (EIA 364-21C)	Insulation Resistance: Initial 1000 megohms Min.
7.4	Withstanding Voltage	Apply 800V A/C (rms) for 1 minute to the adjacent terminal and ground of the Mate connectors. (EIA 364-20C)	No breakdown or flashover.

喬訊電子工業股份有限公司
CHYAO SHIUNN ELECTRONIC INDUSTRIAL LTD.
5FL, #168, JUNG SHIAU RD., PA-LI HSIAN,
TAIPEI HSIEN, TAIWAN, R.O.C.
TEL: 886-2-26105266(REP) FAX: 886-2-26101558
http://www.chyaoshiunn.com.tw E-mail:cs@chyaoshiunn.com.tw

8.0 Environmental Performance:

Item		Test Condition	Requirement
8.1	Durability	Mate Connectors up 50 Cycles at a Maximun rate of 10 cycles Per minute prior to environmental test (EIA/ECA 364-09C)	(After the test) Contact Resistance: 40 milliohms Max.
8.2	Vibration	Frequency: 10~55~10 Hz/minute. Amplitude: 1.5 mm. Direction: 1. Axis of up and down. 2. Axis of right the left. 3. Axis of front and back. Period: 2 hours for each direction. (EIA/ECA 364-28E-Condition I)	(After the test) Contact Resistance: 40 milliohms Max.
			No discontinuity current is longer than 1 microsecond.
8.3	Humidity Steady State	Temperature: 40±2℃. Humidity: 90%~95% (RH). Period: 96 hours continuously. (EIA 364-31B Conditions III . Method A)	(After the test) Contact Resistance: 40 milliohms Max.
			Insulation Resistance: 500 megohms Min. after the test.
			Withstanding Voltage: No breakdown or flashover.

喬訊電子工業股份有限公司
CHYAO SHIUNN ELECTRONIC INDUSTRIAL LTD.
5FL, #168, JUNG SHIAU RD., PA-LI HSIAN,
TAIPEI HSIEN, TAIWAN, R.O.C.
TEL: 886-2-26105266(REP) FAX: 886-2-26101558
http://www.chyaoshiunn.com.tw E-mail:cs@chyaoshiunn.com.tw

Type Document	Product Specification	Revised /Edition	P
Date Issued	2005/05/20	Data Revised	2016/11/07
Subject: JS-2007/T JS-2008/A/B/V JS-2008R/RA Pitch 2.00mm Double-Row DIP/SMT Series Wire to Board Connector			Issued By: Engineering Dept.

Item		Test Condition	Requirement
8.4	Heat Aging	Temperature: 85±3℃. Period: 96 hours continuously. (EIA 364-17B Conditions III . Method A)	(After the test) Contact Resistance: 40 milliohms Max.
8.5	Thermal Shock	One Cycle Consists Of: －55(＋0－3)℃ for 30 minutes. ＋85(＋3－0)℃ for 30 minutes. Time of Cycles: 25 Cycles. (EIA/ECA 364-32D Conditions I . Method A)	Same as paragraph 8.3
8.6	Salt Spray	Temperature: 35±2℃. Density: 5 % in weight. Period: Terminal or contact (Stamping after tin plated for 8 hours) ; Terminal or contact (Stamping before tin plated for 24 hours)	(After the test) Contact Resistance: 40 milliohms Max.
8.7	Solder Ability	Solder Temperature: 245 ± 5℃ Immersion Period: 3 ±0.5 Seconds (EIA 364-52B)	Solder entirely 95% of immersed area must show no voids or pinholes.

喬訊電子工業股份有限公司
CHYAO SHIUNN ELECTRONIC INDUSTRIAL LTD.
5FL, #168, JUNG SHIAU RD., PA-LI HSIAN,
TAIPEI HSIEN, TAIWAN, R.O.C.
TEL: 886-2-26105266(REP) FAX: 886-2-26101558
http://www.chyaoshiunn.com.tw E-mail:cs@chyaoshiunn.com.tw

Type Document	Product Specification	Revised /Edition	P
Date Issued	2005/05/20	Data Revised	2016/11/07
Subject: JS-2007/T JS-2008/A/B/V JS-2008R/RA Pitch 2.00mm Double-Row DIP/SMT Series Wire to Board Connector			Issued By: Engineering Dept.

Item		Test Condition	Requirement
8.8	Resistance To Soldering Heat	By reflow soldering: 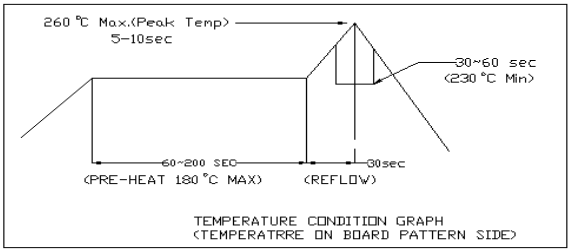 By soldering : Solder Temperature: 260 ± 5℃. Immersion Period: 3±0.5 Seconds Method: 0.5mm (SMT) / 1.5mm (DIP) from terminal tip and fitting nail tip.	No deformation or damage.

9.0 Insertion Force (I.F.) & Retention Force (R.F.)

9.1 Requirement:

No. Of Circuits	AT INITIAL		AT 50TH	No. Of Circuits	AT INITIAL		AT 50TH
	I.F. (MAX)	R.F. (MIN)	R.F. (MIN)		I.F. (MAX)	R.F. (MIN)	R.F. (MIN)
2x2	2.04	0.50	0.41	14x2	8.16	1.74	1.07
3x2	2.55	0.61	0.46	15x2	8.67	1.84	1.12
4x2	3.06	0.71	0.51	16x2	9.18	1.94	1.17
5x2	3.57	0.82	0.56	17x2	9.69	2.04	1.22
6x2	4.08	0.92	0.61	18x2	10.20	2.14	1.27
7x2	4.59	1.02	0.66	19x2	10.71	2.24	1.32
8x2	5.10	1.12	0.71	20x2	11.22	2.34	1.37
9x2	5.61	1.22	0.77	21x2	11.73	2.44	1.42
10x2	6.12	1.33	0.82	22x2	12.24	2.54	1.47
11x2	6.63	1.43	0.92	23x2	12.75	2.64	1.52
12x2	7.14	1.53	0.97	24x2	13.26	2.74	1.57
13x2	7.65	1.63	1.02	25x2	13.77	2.84	1.62

(Kgf)

TPB013

Sep. 30 2002 08:58AM P3
FAX NO. : 28470400
FROM : YUA SUN CO. LTD

第一伸銅科技股份有限公司
FIRST COPPER TECHNOLOGY CO., LTD.
檢 驗 報 告 表
Inspection Report

序號：10815031

客戶名稱 Customer	亞松貿易有限公司	重量 Weight(kg)	1471.0	出貨日期 Date	910816
品名 Article	標準 Standard NO.	尺寸&質別 Dimension & Temper		製程代號 P-Code	鋼卷編號 Coil No.
C5191	JIS H 3110	0.2㎜*300㎜*H材		UH200H4	EA41U

化學成份 Chemical Compositions (%)

元素 Element	Cu	Sn	P	Cu+Sn+P					
規範 Spec.	—	~~7.00~~ | 5.50	~~0.35~~ | 0.03	99.5↑					
實測 Actual	94.06	5.80	0.11	99.97					

機械性質 Mechanical Properties.

項目 Item	結晶粒度 Grain Size mm	硬度 Hardness HV	抗張強度 Tension Strength Kgf/mm²	伸長率 Elongation %	導電率 Electrical Conductivity %IACS	彎曲試驗 Bending Test 180	表面粗度 Surface Roughness Rmax(μm)	彎曲度 Camber mm/1M	電鍍層 底層 μm	電鍍層 表層 μm
規範 Spec.	—	~~205~~ | 190	~~68.0~~ | 60.0	10↑	—		—	—		
實測 Actual	—	204	64.6	20.2	—	—	—	—		

PCF39-1

課長：

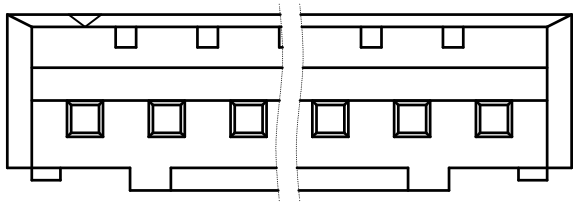

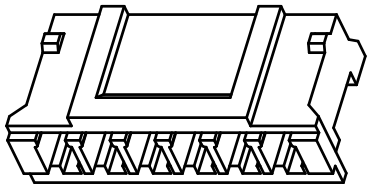

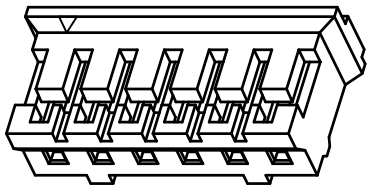

■ SPECIFICATIONS

△7
- Rating Voltage : 100V AC/DC
- Current Rating : 2A AC/DC
- Withstanding Voltage : 800V AC/minute
- Insulation Resistance : 1,000MΩ min
- Temperature Range : - 25℃ to + 85℃
- Contact Resistance : 20mΩ max

■ HOUSING

- Part No. : JS-1124-XX
- Poles : 02~16
- Materia : Nylon 66 UL94V-0
- Q' ty : 1,000 pcs/bag

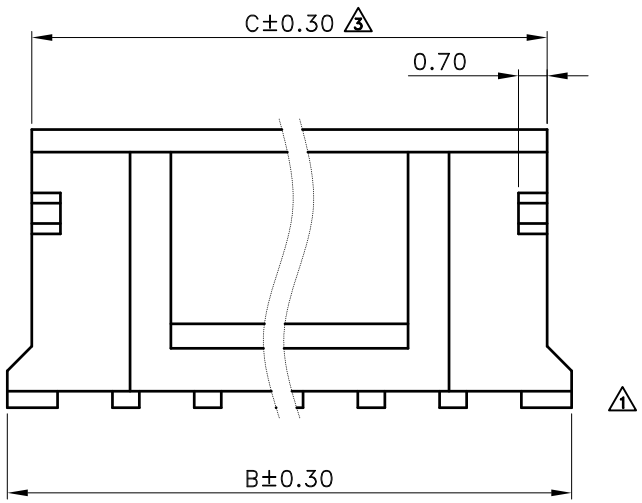

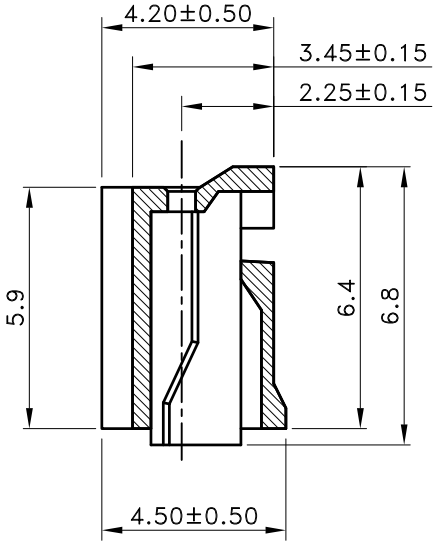

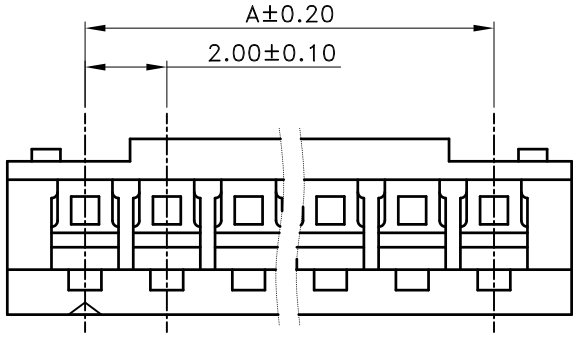

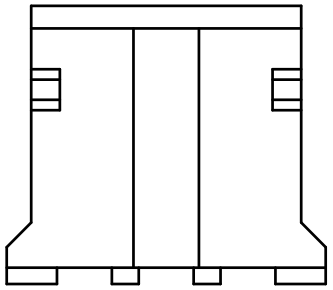

3P APPEARENCE △6

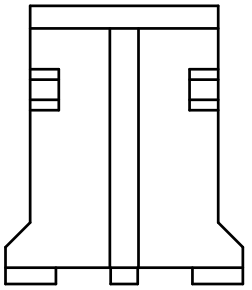

2P APPEARENCE

Poles	Dimension(mm)		
	A	B	C
2	2.00	5.80	4.60
3	4.00	7.80	6.60
4	6.00	9.80	8.60
5	8.00	11.80	10.60
6	10.00	13.80	12.60
7	12.00	15.80	14.60
8	14.00	17.80	16.60
9	16.00	19.80	18.60
10	18.00	21.80	20.60
11	20.00	23.80	22.60
12	22.00	25.80	24.60
13	24.00	27.80	26.60
14	26.00	29.80	28.60
15	28.00	31.80	30.60
16	30.00	33.80	32.60

喬訊電子工業股份有限公司
CHYAO SHIUNN
ELECTRONIC INDUSTRIAL LTD.

PART NO JS-1124-XX

2.00mm Wire to Board Connector

APPROVED BY	SCALE	UNIT
張育瑞		mm
CHECKED BY	PROJ	VER NO.
蕭國川		a7
DRAWN BY	DATE	SIZE
吳弘文	2013/01/21	A4

TOLERANCE		LTR	REVISION RECORD	NAME	DATE
.0	±0.30	△1	修改原因遺失	佘秀麗	2005/05/15
.00	±0.20	△2	圖面與實物不符	黃科源	2006/10/06
.000	±0.10	△3	增加C點尺寸	黃科源	2007/05/17
ANGLE		△4	修改C點尺寸	黃科源	2007/05/24
0°	±1°	△5	新增3D視圖&互配示意圖	林文泰	2010/02/04
.0°	±	△6	新增2P&3P外觀示意圖	王誠賢	2011/05/20
SHEET	1/1	△7	增列額定電壓	吳弘文	2013/01/21

LTR	REVISION RECORD	NAME	DATE
△8			
△9			
△10			

CUSTOMER

Conforms to The RoHS Instruction

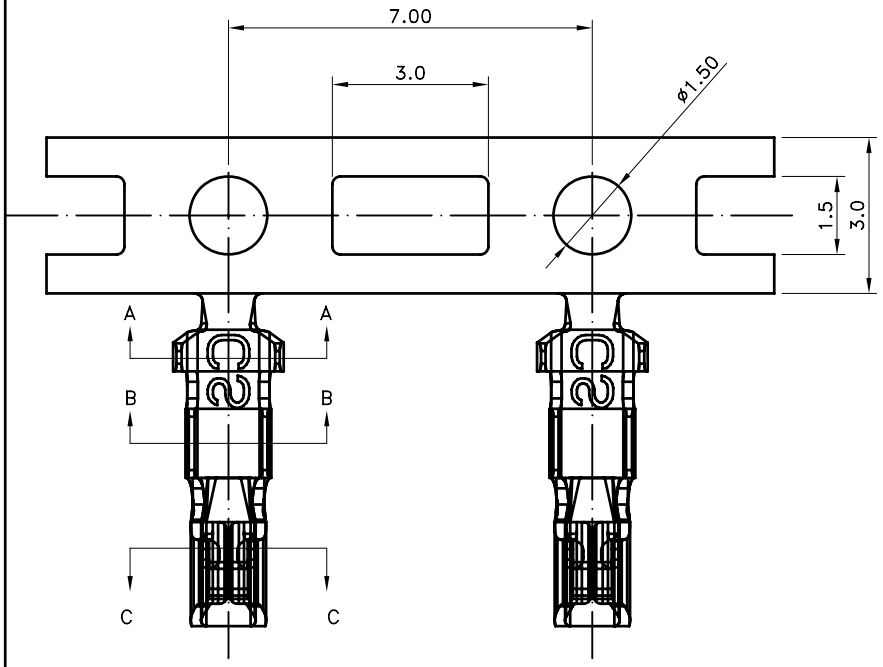

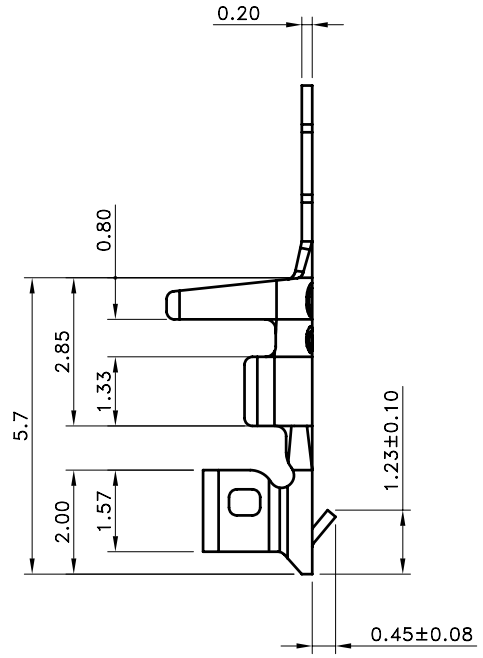

■ SPECIFICATIONS

- Current Rating : 2A AC/DC
- Withstanding Voltage : 800V AC/minute
- Insulation Resistance : 1,000MΩ min
- Temperature Range : - 25°C to + 85°C
- Contact Resistance : 20mΩ max

■ TERMINAL

△5

△9 • Part No. : JS-1124-T X X (XX)
①②③

△9 ①Material : Blank : Phos. Bronze
B : Brass

②Process:
Blank : Normal
P : Stamping Befor Plated

△8 ③Plated :
Blank: Tin Plated (Standard Type)
G : Gold Flash
G1 : Au > 5u"
G5 : Au > 30u"

- Applicable Wires : AWG # 22 - 28
- Material : Refer the above options
- Plated : Refer the above options
- Thickness : 0.2mm
- Q' ty : 10,000 pcs/Reel

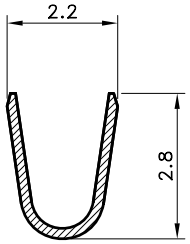

Section A–A

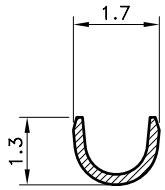

Section B–B

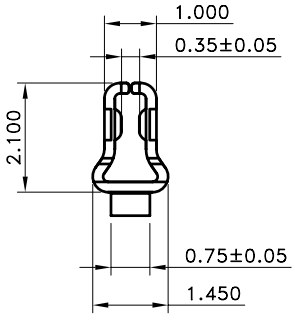

Section C–C

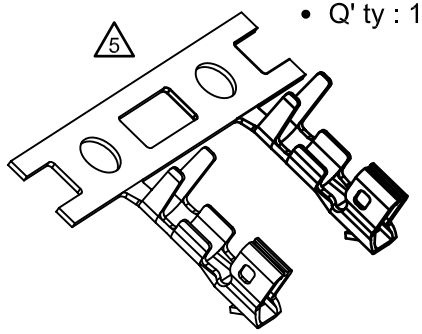

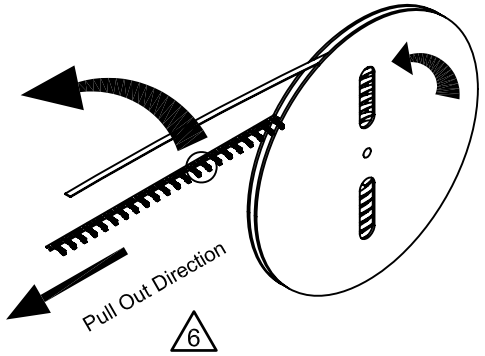

喬訊電子工業股份有限公司
CHYAO SHIUNN
ELECTRONIC INDUSTRIAL LTD.

PART NO JS-1124-TXX(XX)

2.00mm Series Wire to Board Terminal

APPROVED BY	SCALE	UNIT
張育瑞		mm
CHECKED BY	PROJ	VER NO.
黃科源		a9
DRAWN BY	DATE	SIZE
張逸維	2013/02/21	A4

TOLERANCE	
.0	±0.30
.00	±0.20
.000	±0.10
ANGLE	
0°	±1°
.0°	±
SHEET	1/1

LTR	REVISION RECORD	NAME	DATE
△1	200502-004	邱森鴻	2005/02/05
△2	DG 200503-005	佘秀麗	2005/03/16
△3	DG 200609-008	xxx	2006/09/22
△4	200812-013	黃科源	2008/12/13
△5	重開模具	金 飛	2010/06/14
△6	增加產品出料方向	王誠賢	2011/05/11
△7	增加產品管控尺寸	胡丹桂	2011/11/14

LTR	REVISION RECORD	NAME	DATE
△8	刪除倒角尺寸,增加鍍層選項	張逸維	2012/12/14
△9	增加黃銅材質選項	張逸維	2013/02/21
△10			

CUSTOMER

Conforms to The RoHS Instruction

喬訊電子工業股份有限公司
CHYAO SHIUNN ELECTRONIC INDUSTRIAL LTD.
7FL., NO.17, LANE 3, SEC.1 CHUNG CHENG EAST RD.,
TAMSHUI, TAIPEI, TAIWAN, R.O.C.
TEL: 886-2-2629-9955 (REP) FAX: 886-2-2626-6677
http://www.chyaoshiunn.com.tw E-mail:cs@chyaoshiunn.com.tw

Type Document	Product Specification	Revised /Edition	E
Date Issued	1993/07/01	Data Revised	2005/08/03
Subject: JS-1124 JS-1124-T/TC JS-1125/(K) JS-1125R Pitch 2.00mm DIP Series Wire to Board Connector			Issued By: Engineering Dept.

This specification is referred to the 2.00mm DIP series wire to board connector.

-INDEX-

1.0 Product Name/Part Number & Drawing Number.
零件名称/零件料号/图面编号
2.0 Construction/Dimensions/Material & Surface Finish.
说明/尺寸/所用物料/表面处理
3.0 Characteristic.
特性
4.0 Specimen.
样本
5.0 Applicable Standards.
适用标准
6.0 Mechanical Performance.
机械特性
7.0 Electrical Performance.
电子特性
8.0 Environmental Performance.
环境特性
9.0 Insertion Force & Retention Force Requirement.
插入力与拔出力需求
10.0 Remark.
备注

喬訊電子工業股份有限公司
CHYAO SHIUNN ELECTRONIC INDUSTRIAL LTD.
7FL., NO.17, LANE 3, SEC.1 CHUNG CHENG EAST RD.,
TAMSHUI, TAIPEI, TAIWAN, R.O.C.
TEL: 886-2-2629-9955 (REP) FAX: 886-2-2626-6677
http://www.chyaoshiunn.com.tw E-mail:cs@chyaoshiunn.com.tw

Type Document	*Product Specification*	*Revised /Edition*	*E*
Date Issued	*1993/07/01*	*Data Revised*	*2005/08/03*
Subject: JS-1124 JS-1124-T/TC JS-1125/(K) JS-1125R Pitch 2.00mm DIP Series Wire to Board Connector			*Issued By: Engineering Dept.*

1.0 Product Name/Part Number & Drawing Number:

Product Name		Part Number	Drawing Number
Terminal		JS-1124-T/TC	JS-1124-T/TC
Housing		JS-1124	JS-1124-xx
Wafer	Straight	JS-1125/(K)	JS-1125-xx/(K)
	Right Angle	JS-1125R	JS-1125R-xx

Note: (K) Denotes the post with kink in accordance with customer's options on the straight wafer.
In this series the kink with post is standard on the right angle wafer.
(xx) The number of the circuits.

2.0 Construction/Dimensions/Material & Surface Finish:

Construction and dimensions shall be in accordance with the referenced drawing.
Material and surface finish shall be specified as listing.

Part Name		Material	Surface Finish
Terminal		Phosphor Bronze	Tin-Plated
Housing		Nylon 66	UL 94V-0
Wafer	Post	Brass	Tin-Plated
	Base	Nylon 66	UL 94V-0

喬訊電子工業股份有限公司
CHYAO SHIUNN ELECTRONIC INDUSTRIAL LTD.
7FL., NO.17, LANE 3, SEC.1 CHUNG CHENG EAST RD.,
TAMSHUI, TAIPEI, TAIWAN, R.O.C.
TEL: 886-2-2629-9955 (REP) FAX: 886-2-2626-6677
http://www.chyaoshiunn.com.tw E-mail:cs@chyaoshiunn.com.tw

Type Document	*Product Specification*	*Revised /Edition*	*E*
Date Issued	*1993/07/01*	*Data Revised*	*2005/08/03*
Subject: JS-1124 JS-1124-T/TC JS-1125/(K) JS-1125R Pitch 2.00mm DIP Series Wire to Board Connector			*Issued By: Engineering Dept.*

3.0 Characteristic:

Item		Standard	
3.1	Rated Current 额定电流	2A AC/DC (With AWG #24 is applied)	
3.2	Rated Voltage 额定电压	100V AC/DC	
3.3	Ambient Temperature Range 适用温度	-25℃~+85℃	
3.4	Applicable Wire 适用线型	3.4.1	Conductor Construction Size: AWG #22~#28
		3.4.2	Wire Insulation O.D.: 1.2mm~1.6mm
3.5	Applicable Printed Circuit Board (PCB) 适用 PCB 板	3.5.1	Thickness: 0.8 mm ~ 1.6 mm
		3.5.2	Hole Size: 0.85±0.05 mm
		3.5.3	Hole Pitch: 2.00 ± 0.05 mm

4.0 Specimen:

Part Name		Part Number	Picture or Photograph
Contact		JS-1124-T/TC	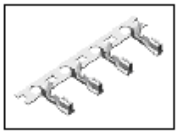
Housing		JS-1124-xx	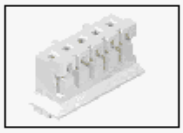
Wafer	Straight	JS-1125-xx/(K)	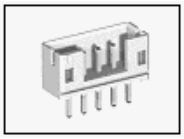
	Right Angle	JS-1125R-xx	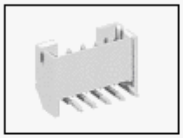

喬訊電子工業股份有限公司
CHYAO SHIUNN ELECTRONIC INDUSTRIAL LTD.
7FL., NO.17, LANE 3, SEC.1 CHUNG CHENG EAST RD.,
TAMSHUI, TAIPEI, TAIWAN, R.O.C.
TEL: 886-2-2629-9955 (REP) FAX: 886-2-2626-6677
http://www.chyaoshiunn.com.tw E-mail:cs@chyaoshiunn.com.tw

Type Document	Product Specification	Revised /Edition	E
Date Issued	1993/07/01	Data Revised	2005/08/03
Subject: JS-1124 JS-1124-T/TC JS-1125/(K) JS-1125R Pitch 2.00mm DIP Series Wire to Board Connector			Issued By: Engineering Dept.

5.0 Applicable Standards:

MIL-STD-202 Methods by test of connectors for electronic equipment.

MIL-STD-1344 Test methods for electrical connectors.

6.0 Mechanical Performance:

Item		Test Condition		Requirement
6.1	Insertion & Retention Force 插入与拔出力	Insert and withdraw with connectors at the speed rate of 25mm/minute.		Refer to paragraph 9.1
6.2	Crimp Tensile Strength 压线拉力	Pull with contact terminal at the speed rate of 25mm/minute.	AWG#22 size wire	5.0kgf/Min.
			AWG#24 size wire	3.0kgf/Min.
			AWG#26 size wire	2.0kgf/Min.
			AWG#28 size wire	1.3kgf/Min.
6.3	Contact Retention Force 端子保持力	Withdraw with contact terminal at the speed rate of 25mm/minute.		1.5kgf/Min.
6.4	Post Retention Force PIN 针保持力	Use a tension gauge to press the post at the speed rate of 25mm/minute.		1.0kgf/Min.

喬訊電子工業股份有限公司
CHYAO SHIUNN ELECTRONIC INDUSTRIAL LTD.
7FL., NO.17, LANE 3, SEC.1 CHUNG CHENG EAST RD.,
TAMSHUI, TAIPEI, TAIWAN, R.O.C.
TEL: 886-2-2629-9955 (REP) FAX: 886-2-2626-6677
http://www.chyaoshiunn.com.tw E-mail:cs@chyaoshiunn.com.tw

Type Document	*Product Specification*	*Revised /Edition*	*E*
Date Issued	*1993/07/01*	*Data Revised*	*2005/08/03*
Subject: JS-1124 JS-1124-T/TC JS-1125/(K) JS-1125R Pitch 2.00mm DIP Series Wire to Board Connector			*Issued By: Engineering Dept.*

7.0 Electrical Performance:

Item		Test Condition	Requirement
7.1	Contact Resistance 接触电阻	A maximum voltage of 20mV and a maximum current of 10mA are applied to the Mate connectors.	Contact Resistance: 20 milliohms Max.
7.2	Current Continuity 瞬间电流	Each circuit of the connector shall be connected in series. Continuity meter shall inspect current discontinuity.	No discontinuity current is longer than 1 microsecond.
7.3	Insulation Resistance 绝缘电阻	Apply 500V D/C to any two adjacent contacts to measure the insulation resistance.	Insulation Resistance: Initial 1000 megohms Min.
7.4	Withstanding Voltage 高压测试	Apply 800V A/C (rms) for 1 minute to the adjacent terminal and ground of the Mate connectors.	No breakdown or flashover.

喬訊電子工業股份有限公司
CHYAO SHIUNN ELECTRONIC INDUSTRIAL LTD.
7FL., NO.17, LANE 3, SEC.1 CHUNG CHENG EAST RD.,
TAMSHUI, TAIPEI, TAIWAN, R.O.C.
TEL: 886-2-2629-9955 (REP) FAX: 886-2-2626-6677
http://www.chyaoshiunn.com.tw E-mail:cs@chyaoshiunn.com.tw

Type Document	*Product Specification*	*Revised /Edition*	*E*
Date Issued	*1993/07/01*	*Data Revised*	*2005/08/03*
Subject: JS-1124 JS-1124-T/TC JS-1125/(K) JS-1125R Pitch 2.00mm DIP Series Wire to Board Connector			*Issued By: Engineering Dept.*

8.0 Environmental Performance:

Item		Test Condition	Requirement
8.1	Vibration 振动测试	Frequency: 10~55~10 Hz/minute. Amplitude: 1.52 mm. Direction: 1. Axis of up and down. 2. Axis of right the left. 3. Axis of front and back. Period: 2 hours for each direction.	Contact Resistance: 20 milliohms Max. No discontinuity current is longer than 1 microsecond.
8.2	Humidity Steady State 湿度试验	Temperature: 40±2℃. Humidity: 90%~95% (RH). Period: 96 hours continuously.	Contact Resistance: 20 milliohms Max. after the test. Insulation Resistance: 500 megohms Min. after the test. Withstanding Voltage: No breakdown or flashover.
8.3	Heat Aging 热变形	Temperature: 85±3℃. Period: 96 hours continuously.	Contact Resistance: 20 milliohms Max. after the test.
8.4	Thermal Shock 热冲击	One Cycle Consists Of: －55(＋0－3)℃ for 30 minutes. ＋85(＋3－0)℃ for 30 minutes. Time of Cycles: 25 Cycles.	Same as paragraph 8.2

喬訊電子工業股份有限公司
CHYAO SHIUNN ELECTRONIC INDUSTRIAL LTD.
7FL., NO.17, LANE 3, SEC.1 CHUNG CHENG EAST RD.,
TAMSHUI, TAIPEI, TAIWAN, R.O.C.
TEL: 886-2-2629-9955 (REP) FAX: 886-2-2626-6677
http://www.chyaoshiunn.com.tw E-mail:cs@chyaoshiunn.com.tw

Type Document	Product Specification	Revised /Edition	E
Date Issued	1993/07/01	Data Revised	2005/08/03
Subject: JS-1124 JS-1124-T/TC JS-1125/(K) JS-1125R Pitch 2.00mm DIP Series Wire to Board Connector			Issued By: Engineering Dept.

Item		Test Condition	Requirement
8.5	Salt Spray 盐水喷雾	Temperature: 35±2℃. Density: 5 % in weight. Period: 48 hours.	Contact Resistance: 20 milliohms Max. after the test.
8.6	Hydrogen Sulfide GAS 氢化硫试验	Density: 3±1ppm. Temperature: 40±2℃. Humidity: 75%(RH). Period: 96 hours continuously.	Contact Resistance: 20 milliohms Max. after the test.
8.7	Solder Ability 焊接能力	Solder Temperature: 230 ± 5℃. Immersion Period: 3 ±0.5 Seconds	Solder entirely 95% of immersed area must show no voids or pinholes.
8.8	Resistance To Soldering Heat 高温耐热焊接	Solder Temperature: 230 ± 5℃. Immersion Period: 3~5±0.5 Seconds Method: 1.5mm from terminal tip and fitting nail tip. Note: The tested temperature and period required is reference material decision.	No deformation or damage.

喬訊電子工業股份有限公司
CHYAO SHIUNN ELECTRONIC INDUSTRIAL LTD.
7FL., NO.17, LANE 3, SEC.1 CHUNG CHENG EAST RD.,
TAMSHUI, TAIPEI, TAIWAN, R.O.C.
TEL: 886-2-2629-9955 (REP) FAX: 886-2-2626-6677
http://www.chyaoshiunn.com.tw E-mail:cs@chyaoshiunn.com.tw

Type Document	Product Specification	Revised /Edition	E
Date Issued	1993/07/01	Data Revised	2005/08/03
Subject: JS-1124 JS-1124-T/TC JS-1125/(K) JS-1125R Pitch 2.00mm DIP Series Wire to Board Connector			Issued By: Engineering Dept.

9.0 Insertion Force (I.F.) & Retention Force (R.F.)

9.1 Requirement:

No. Of Circuits	AT INITIAL		AT 30TH	No. Of Circuits	AT INITIAL		AT 50TH
	I.F. (MAX)	R.F. (MIN)	R.F. (MIN)		I.F. (MAX)	R.F. (MIN)	R.F. (MIN)
				11	6.00	1.95	1.40
02	2.40	0.60	0.50	12	6.40	2.10	1.50
03	2.80	0.75	0.60	13	6.80	2.25	1.60
04	3.20	0.90	0.70	14	7.20	2.40	1.70
05	3.60	1.05	0.80	15	7.60	2.55	1.80
06	4.00	1.20	0.90	16	8.00	2.70	1.90
07	4.40	1.35	1.00				
08	4.80	1.50	1.10				
09	5.20	1.65	1.20				
10	5.60	1.80	1.30				

(Kg/f)

10.0 Remark: Any change or revision for the product specification will not be announced in advance. Please contact our sales representative for the latest information.

图面编号(DRAWING NO.)

正ORIGINAL本

版数 REV.	年月日 DATE	DCN NO.	变更内容 DESCRIPTION	制图 DRAWN	审核 CHECKED	核准 APPROVED
2	2005-11-15		增加高度控制尺寸，修改插拔力要求	DLJ	魏 超	王向党
3	2005-12-21		插入力由F≤2.5N变更为F≤2.0N	DLJ	魏 超	王向党
4	2007-6-05		倒刺高度尺寸变更，端子宽度尺寸变更	ZZH	陈 攀	廖照云

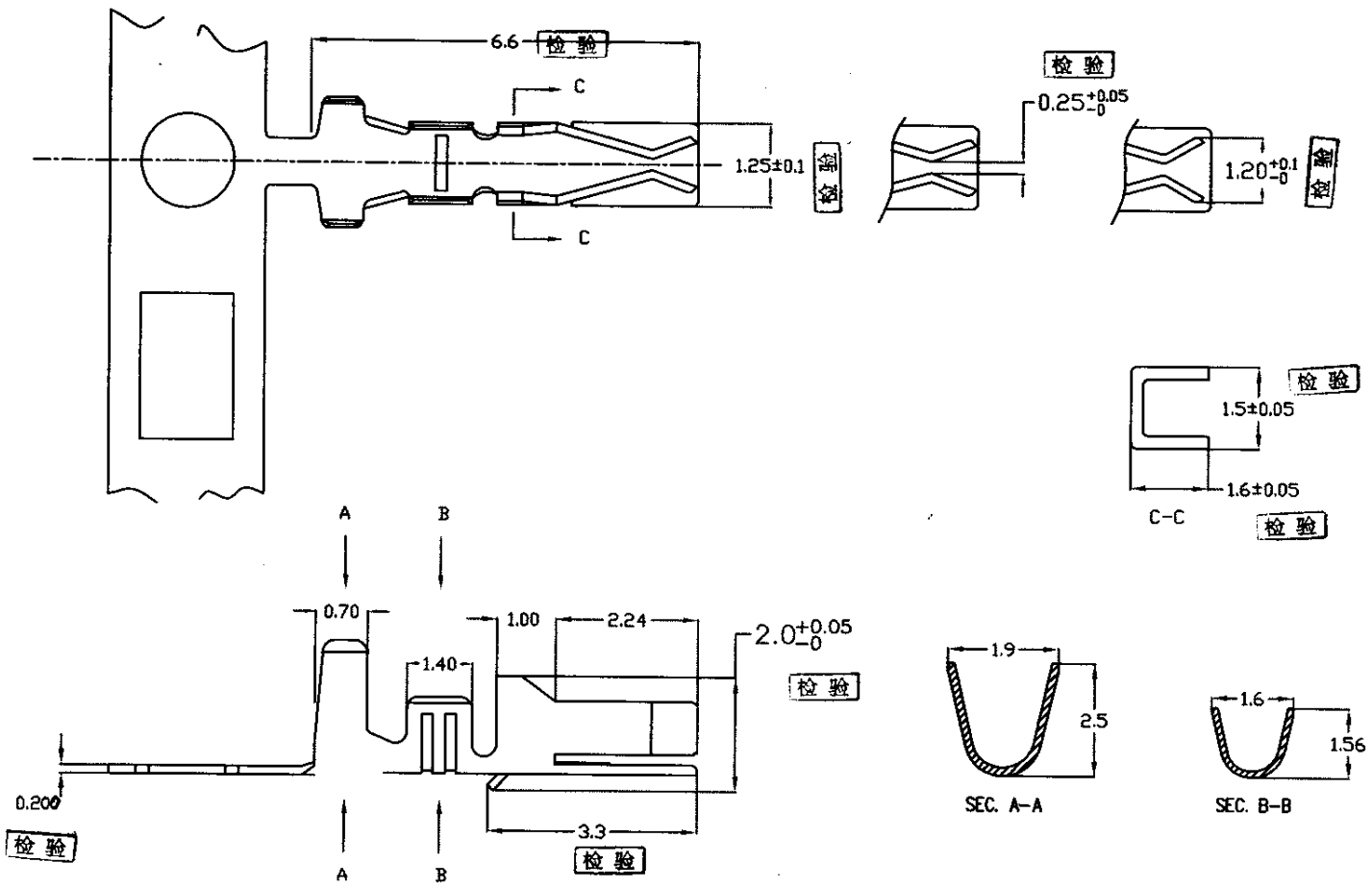

技术参数(SPECIFICATIONS)

* 线数(Poles):
* 适用线规(Applicable wire): AWG28#-22#
* 温度范围(Temperature range): -25℃-85℃
* 额定电压(Voltage rating): 250V,AC,DC
* 额定电流(Current rating): 3A
* 接触电阻(Contact resistance): ≤0.01Ω
* 绝缘电阻(Insulation resistance): ≥1000MΩ
* 耐压(Withstand voltage): 1000V,AC/minute
* 插入力(Insertion Force):≤2.0N
* 拔出力(Retention Force):≥1.0N

注: 端子材料使用高精磷青铜(产地北京)

零件图(PART DWG.)		第1版(ORIGINAL DATE): 2005-12-21	名称(TITLE):	浙江新亚电子科技有限公司
一般公差(GENERAL TOLERANCE) 寸法(DIMENSION)	角度(ANGLES)	制图 (DR.) DLJ	T2006PS-2	ZHEJIANG XINYA ELECTRONIC TECHNOLOGY CO.,LTD. TEL:086-577-86529818 FAX:086-577-86529822 E-mail: xinxin@mail.wpit.zj.cn
. ±0.5	x° ±	审核 (CHK.)		SIZE A4 / DWG.NO. / REV. D
.x ±0.2	x°x ±	核准 (APPD.)	SCALE:FREE	SCALE:1:1 / WEIGHT: / SHEET1OF1
.xx ±0.1				
.xxx ±0.05				

正ORIGINAL本

图面编号(DRAWING NO.)

版数 REV.	年月日 DATE	DCN NO.	变更内容 DESCRIPTION	制图 DRAWN	审核 CHECKED	核准 APPROVED
2	2007-5-7	B版	塑件凸点加高.	BFN	丁丽娟	陈攀
3						
4						

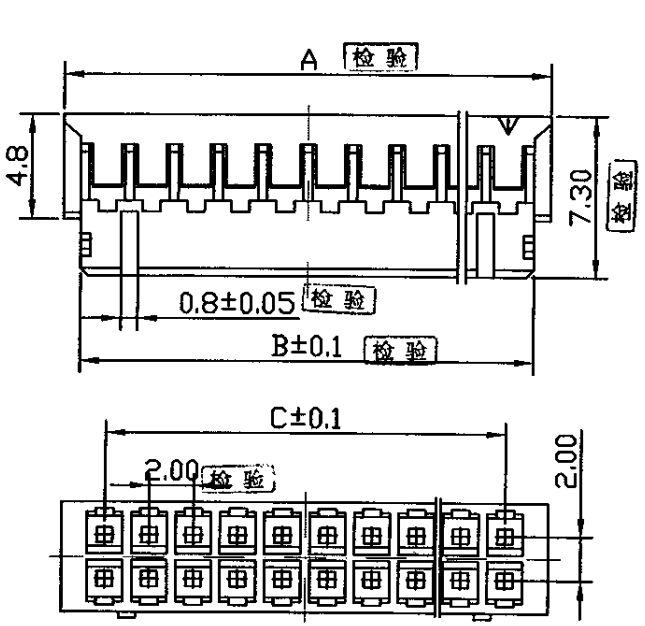

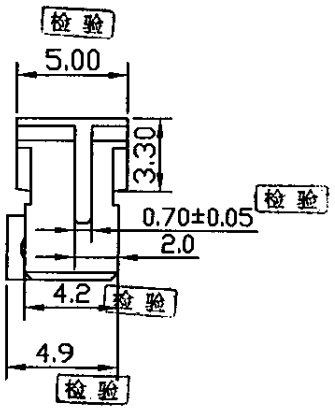

Cir-cuits	Model No. side entry type	DIMENSIONS A	B	C	Cir-cuits	Model No. side entry type	DIMENSIONS A	B	C
4	H2006-2*2P	6.00	4.50	2.00	22	H2006-2*11P	24.00	22.50	20.00
6	H2006-2*3P	8.00	6.50	4.00	24	H2006-2*12P	26.00	24.50	22.00
8	H2006-2*4P	10.00	8.50	6.00	26	H2006-2*13P	28.00	26.50	24.00
10	H2006-2*5P	12.00	10.50	8.00	28	H2006-2*14P	30.00	28.50	26.00
12	H2006-2*6P	14.00	12.50	10.00	30	H2006-2*15P	32.00	30.50	28.00
14	H2006-2*7P	16.00	14.50	12.00	32	H2006-2*16P	34.00	32.50	30.00
16	H2006-2*8P	18.00	16.50	14.00	34	H2006-2*17P	36.00	34.50	32.00
18	H2006-2*9P	20.00	18.50	16.00	Material: Nylon66 UL 94V-0 COLOR: WHITE				
20	H2006-2*10P	22.00	20.50	18.00					

技术参数(SPECIFICATIONS)

* 适用线规(Applicable wire): AWG28#-22#
* 温度范围(Temperature range): -25℃-85℃
* 额定电压(Voltage rating): 250V,AC,DC
* 额定电流(Current rating): 2A
* 接触电阻(Contact resistance): ≤0.01Ω
* 绝缘电阻(Insulation resistance): ≥1000MΩ
* 耐压(Withstand voltage): 800V,AC/minute

零件图(PART DWG.)	第1版(ORIQINAL DATE): 2006-06-22	名称(TITLE):	浙江新亚电子科技有限公司	
一般公差(QENERAL TOLERANCE) 寸法(DIMENSION) 角度(ANGLES)	制图 (DR.) BFN	H2006-2*NP	ZHEJIANG XINYA ELECTRONIC TECHNOLOGY CO.,LTD. TEL:086-577-86528818 FAX:086-577-86528822 E-mail:nasion@mail.wzptt.zj.cn	
. ±0.5 .x ±0.20 .xx ±0.10 .xxx ±0.005	审核 (CHK.)		SIZE A4	TPV REV. B
x° ± x'' x ±	核准 (APPD.)	SCALE:FREE	SCALE:1:1 WEIGHT:	SHEET1OF1

苏州新亚电通有限公司
SUZHOU XINYA ELECTRONIC COMMUNICATION Co.LTD.

D2006TOP.VA插拔力规范：

Circuits 孔位	Insertion(MAX) 插入力（最大值）	Withdrawal(MIN) 拔出力（最小值）	
	initial首次	initial首次	10th 10次后
4	20N	4N	2N
6	24N	6N	3N
8	28N	8N	4N
10	32N	10N	5N
12	36N	12N	6N
14	40N	14N	7N
16	44N	16N	8N
18	48N	18N	9N
20	52N	20N	10N
22	56N	22N	11N
24	60N	24N	12N
26	64N	26N	13N
28	68N	28N	14N
30	72N	30N	15N
32	76N	32N	16N
34	80N	34N	17N
36	84N	36N	18N
38	88N	38N	19N
40	92N	40N	20N
42	96N	42N	21N
44	100N	44N	22N