符合"DLK环境管理物质技术标准"，符合HDMI协会规范要求

工程变更通知单 ECN(DCN) NO.	版本 REV	日期 DATE	说明 DESCRIPTION	改变 CHANGE	承认 APPRO.
————	X0	20230921	NEW	———	———

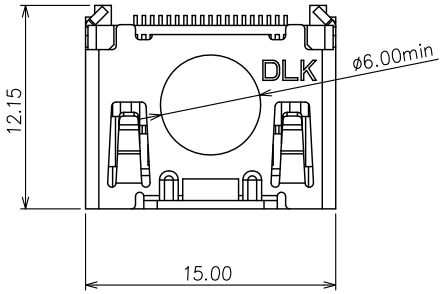

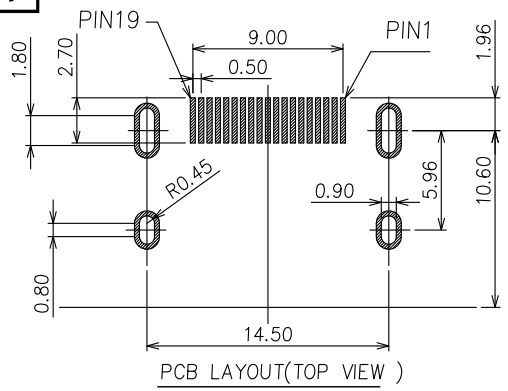

PCB LAYOUT(TOP VIEW)

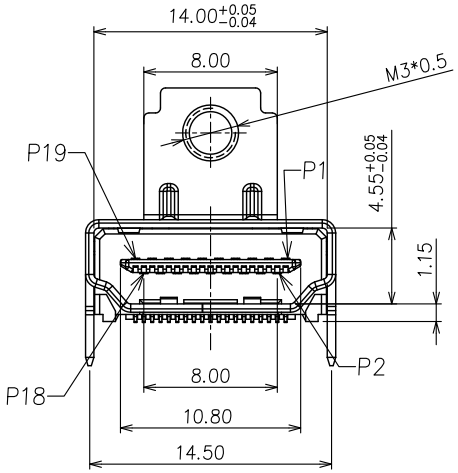

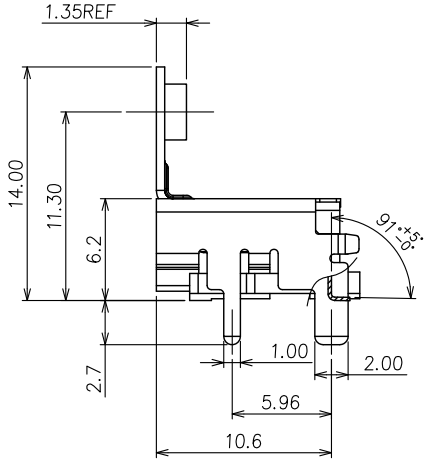

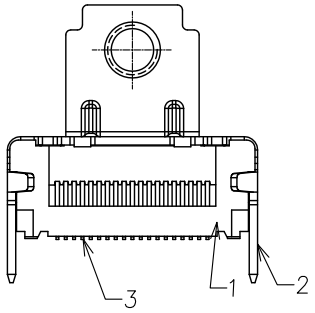

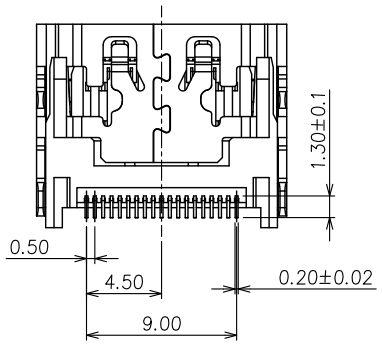

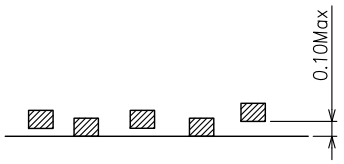

COPLARNITY

HDM29 A-19 B ** R N1 0
① ② ③④ ⑤ ⑥ ⑦

① PRODUTION CODE（产品编码）:
HDM29: R/A 6.2H
② CHARACTER（特征）:
A: R/A SMT TYPE
③ POSITION（位数）:
19:19PIN
④ COLOR OF HOUSING(本体颜色）:
B:BLACK COLOR
⑤ PLATING OF CONTACT(端子电镀）:
M1:Au 1u"AND MATTE TIN PLATED
M4:Au 15u"AND MATTE TIN PLATED
⑥ PACKAGE(包装）:
R :TAPE&REEL PACKAGE
⑦ PLATING OF SHELL(外壳电镀）:
N1:NI PLATD

NOTE
1.CONTACT VOLTAGE RATING: 40V
2.CONTACT CURRENT RATING: 0.5A
3.CONTACT RESISTANCE: 30mΩ Max
4.DIELECTRIC WITHSTANDING VOLTAGE: 500 V R.M.S.
5.INSULATION RESISTANCE 100 MEGOHMS Min
6.TEMPEROTURE RANGE: −55℃ ~+105℃

NO.	ITEM	Q'TY	DESCRIPTION	FINISH
3	CONTACT	19	COPPER ALLOY	PLATED Au
2	SHELL	1	COPPER ALLOY	PLATED NI
1	HOUSING	1	LCP	UL94V-0,Black

GENERAL TOLERANCE UNLESS OTHERWISE NOTED	
Angle	±1°
X.	±0.30
.X	±0.30
.XX	±0.20
.XXX	±0.10
A4	

德力康电子科技有限公司
DLK DELIKANG ELECTRONICS TECHNOLOGY CO.,LTD

C	名称 TITLE:	HDMI A/F R/A 6.2H(11.28)19PIN CONN.			
档案名称 FILE NAME.	C-HDM29-00-00		料号 PART NO:	HDM29A-19BM1RN10	
DRAWING	蒋 召	CHECKED		APPROVED	
UNIT:	mm	SCALE	1:1	SHEET: 1 of 1	