REV.	DATE	DESCRIPTION	BY	APVD

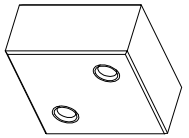

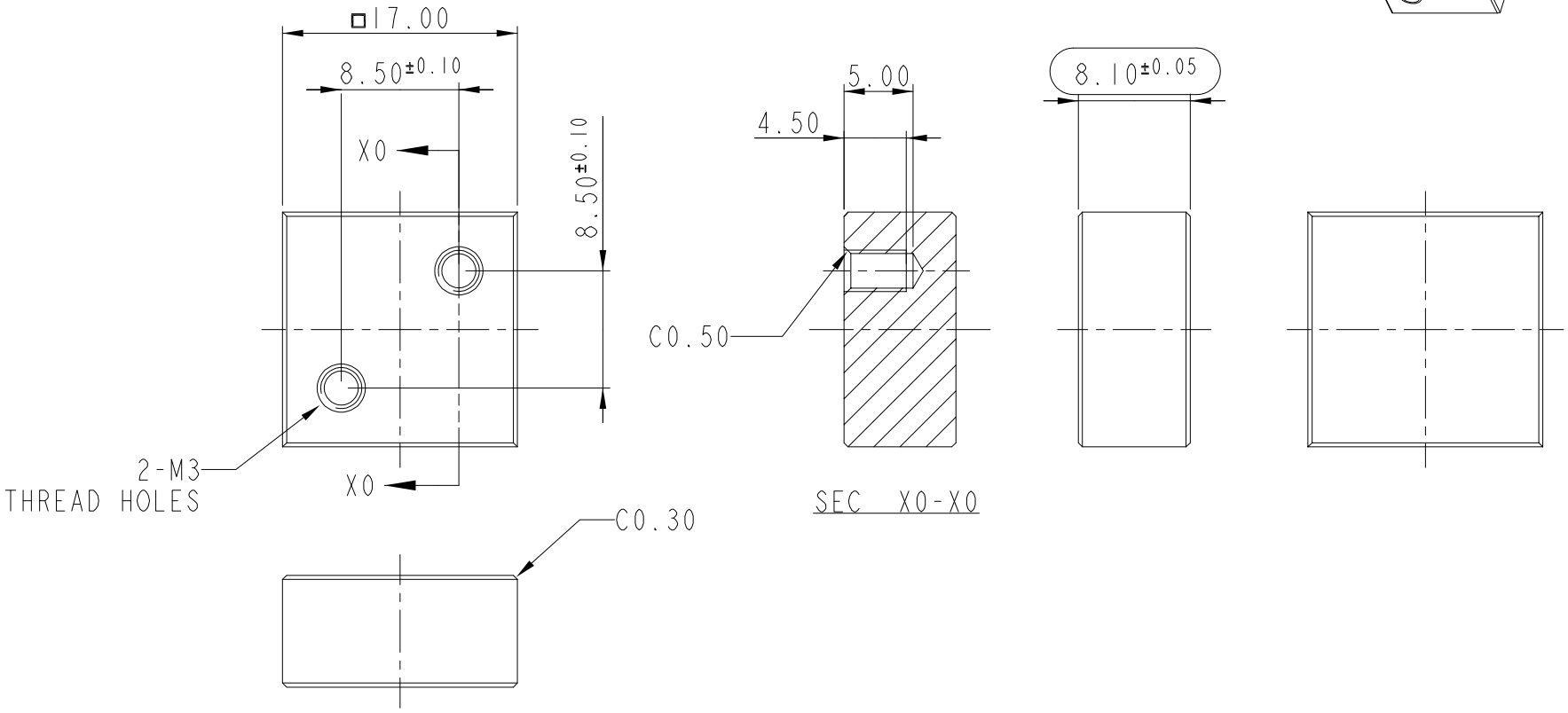

NOTES:
1. MATERIAL: A5052.
2. SURFACE TREATMENT: ANODIZING.
3. SURFACE TREATMENT COLOR: NATURE.
4. IQC INSPECTION DOCUMEMNT NO.: QWI-018.

RANGE OF DIMENSION	TOLERANCE CLASS DESIGNATION f	V m	c
UP TO 30	±0.10	±0.20	±0.50
ABOVE 30~120	±0.15	±0.30	±0.80
ABOVE 120~315	±0.20	±0.50	±1.20
ABOVE 315~1000	±0.30	±0.80	±2.00
ANGLE ±1° (±1.75/100)			

THIRD ANGLE PROJECTION

DSGD by	Ferris Tsai	2023-10-17	
CHK by			
APVD by			
APVD NO.:		3D FILE NAME: HEAT_SINK_17X17XH8D1	

UNITS:mm	SCALE: 2/1	SHEET: 1 OF 1	MODEL NO.: RUG5513AMI
MATERIAL:	A5052	TREATMENT:	ANODIZING

PART NAME: HEAT SINK

PART NO.: 3MD664ME130 | REV. 0

DIVA Laboratories ,Ltd.