









設計驗證
工程課
2023.11.30
發行
鈺緯科技開發股份有限公司





SPECIFICATION

KING-CORD

APPROVED

☑ **HEAD OFFICE & FACTORY:**
KING-CORD CO., LTD
NO. 52-5,Sia Si Hu,Shang Hu Village,
Yang Mei Township,
Tao Yuan County TAIWAN
TEL: 886-3-472-6208
FAX: 886-3-472-7751

☑ **FACTORY:**
KING-CORD ELECTRONICS (SHEN ZHEN) CO.,LTD
No.B2,The West Industry Park of Tan Tou,
Song Gang Town Bao'an District,
Shen Zhen City Guangdong CHINA
TEL: 86-755-2768-2890
FAX: 86-755-2768-2897

RoHS Compliant

KING-CORD Confidential Proprietary

CUSTOMER NAME:	鈺緯
CUSTOMER P/NO:	**3KP00001401** (K0446)
KING-CORD/NO:	**K17031H5250BR**
EDITION:	**D**

CUSTOMER APPR	APPR	CHECK	MADE
設計驗證 工程課 2023.11.30 發行 鈺緯科技開發股份有限公司			*LI YONGHUAN*

INDEX

1 Product Drawing

2 Plug Drawing

3 Connector Drawing

4 Sample Testing Standard

5 Safety Approval For Product

6 The Schedule For The Environment Material Management

7 COC

KING-CORD
Confidential Proprietary

Safety Certificates	
KC-017:	A007768
KC-003:	N13389

RoHS Compliant

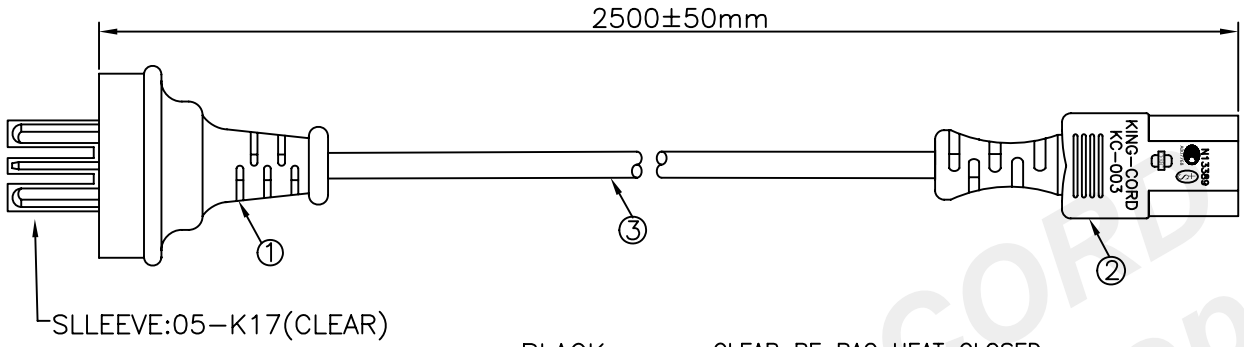

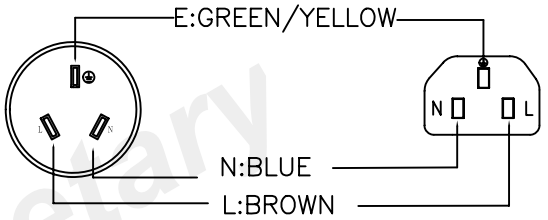

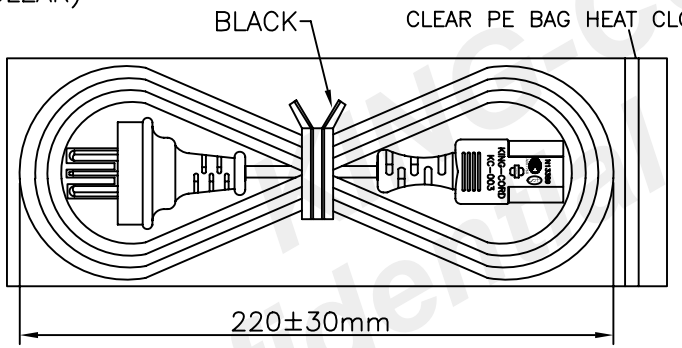

設計驗證
工程課
2023.11.30
發行
鈺緯科技開發股份有限公司

I-SHENG Confidential Proprietary

RECORD OF CHANGE

DATE	REV	DESCRIPTION OF CHANGE
NOV.22.2011	A	NEW PRODUCT
FEB.26.2016	B	INCREASE THE KING-CORD WIRE MANUFACTURER
OCT.09.2019	C	1.Change the print content of I-SHENG power line
		2.Delete BAO HING power cord
OCT.12.2023	D	KC-017、KC-003 ACCORDING TO SAFETY REGULATIONS,
		DELETE THE WORD "S" FROM THE CCC LOGO

NO:	DESCRIPTION	Q'TY	REMARK
1	Plug:KC-017,10A 250V~(GB 2099)	1PC	
2	Connector:KC-003,10A 250V~(EN 60320 C13)	1PC	
3	Cable:H05VV-F 3G0.75mm² DENT MARK PRINTING	1PC	BLACK

UNIT:mm

NOTES:

CUSTOMER NAME: 鈺緯

CUSTOMER NO.: 3KP00001401 (K0446)

KING-CORD NO.: K17031H5250BR

KING-CORD CO.,LTD.

The tooling number is changeable
depends on the actual used one.

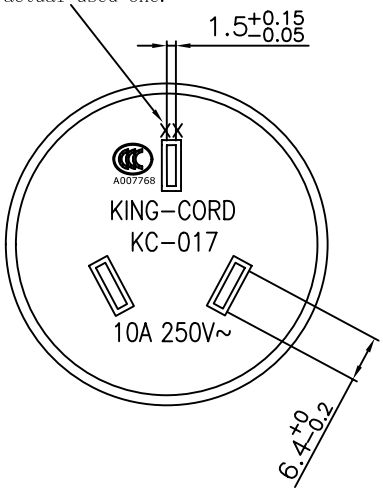

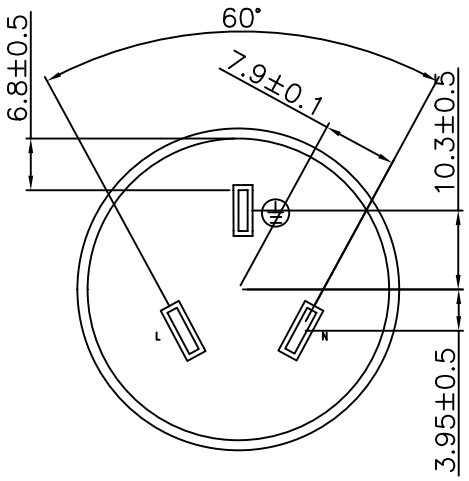

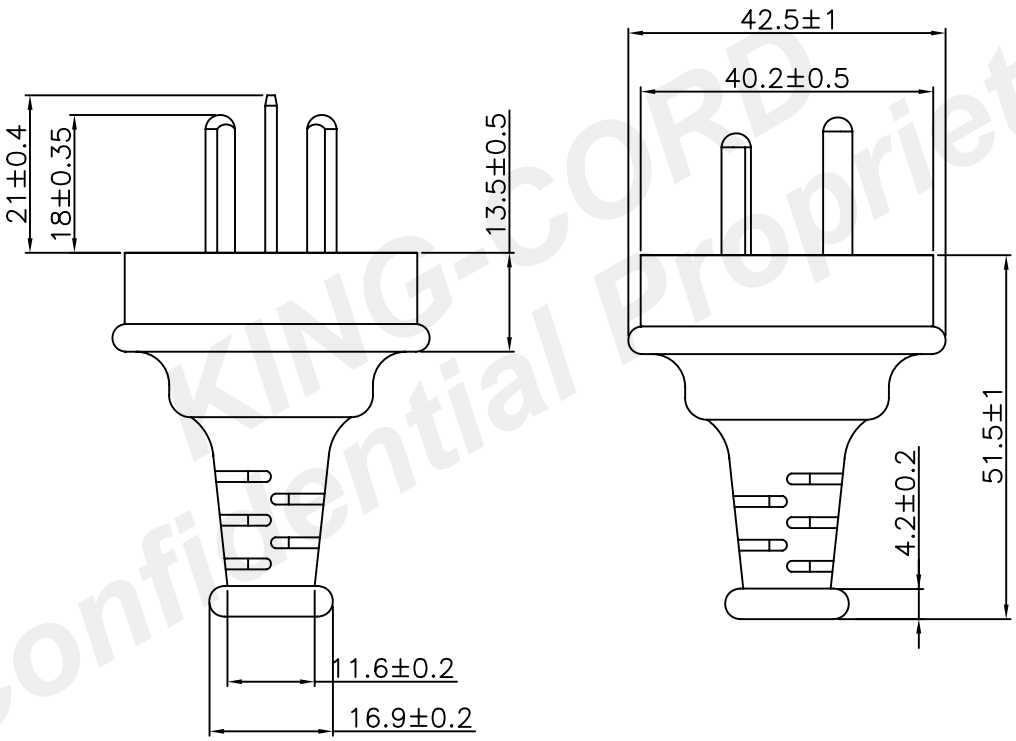

KING-CORD
Confidential Proprietary

REV	DESCRIPTION	DATE
D	ACCORDING TO SAFETY REGULATIONS, DELETE THE WORD "S" FROM THE CCC LOGO	23.08.22
C	ACCORDING TO THE LATEST SAFETY REGULATIONS, THE PLUG SIZE IS CHANGED FROM "1.5+0/−0.1mm" TO 1.5+0.15/−0.05mm	23.02.17
B	CHANGE PLUG SIZE43.5±0.5 TO 42.5±1	21.09.03
A	NEW	05.10.12

Drawer	TSK	Unite	mm	Date	2023.08.22
Scale	1/1	Current	10A 250V~	Drawing No	KC-017

KING-CORE CO.,LTD.

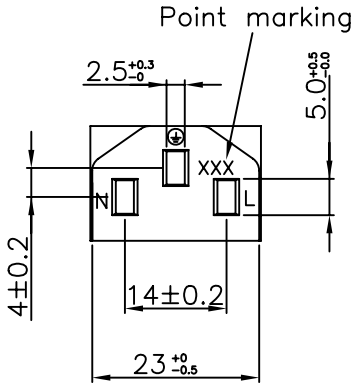

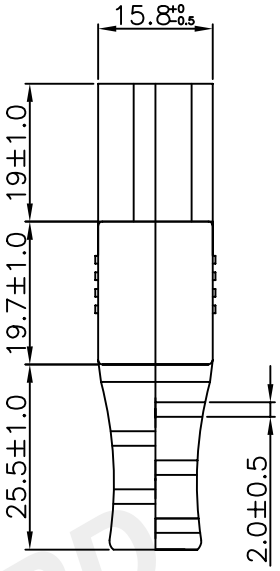

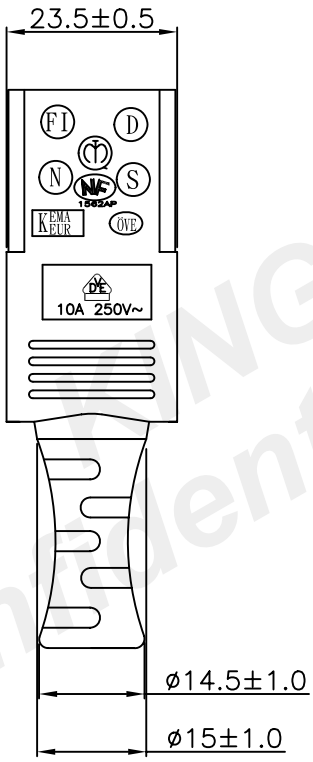

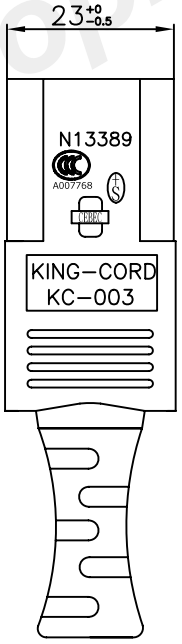

KING-CORD
Confidential Proprietary

B	ACCORDING TO SAFETY REGULATIONS, DELETE THE WORD "S" FROM THE CCC LOGO	23.08.22
A	NEW	08.11.08
REV	DESCRIPTION	DATE

Drawer	chen	Unite	mm	Date	2023.08.22
Scale	1/1	Current	10A 250V~	Drawing No	KC−003

KING−CORD CO.,LTD.

1.Scope:

This specification is applied to H05VV-F 3G 0.75mm^2 power cord.

2.Applicable Safety Standard

GB 2099

EN 60320 C13

3.Construction:

3.1 Plug : Catalogue No. KC-017(CCC type)

3.2 Connector : Catalogue No. KC-003(EUROPE type)

3.3 Flexible Cord Approved Manufacturers

Manufacturer	CCC File NO	Flexible cord
I-SHENG	2002010105022384	H05VV-F
KING-CORD	2015010105809291	

3.4 PVC Flexible Cord

TYPES	CONDUCTOR		CORE	INSULATION	JACKET	OVERALL	RATING		
				MIN THICKNESS	MIN THICKNESS	DIAMETER	Voltage	Temp.	Current
	mm^2	NO./mm		mm	mm	mm	V	℃	A
H05VV-F	0.75	24/0.192 +/- 0.008	3	0.6	0.8	6.8±0.15	300/500	70	10
IN CASE OF DISPUTE, CONDUCTOR RESISTANCE SHALL BE THE REFEREE METHOD									

H5 (H05VV-F 3G0.75mm^2)

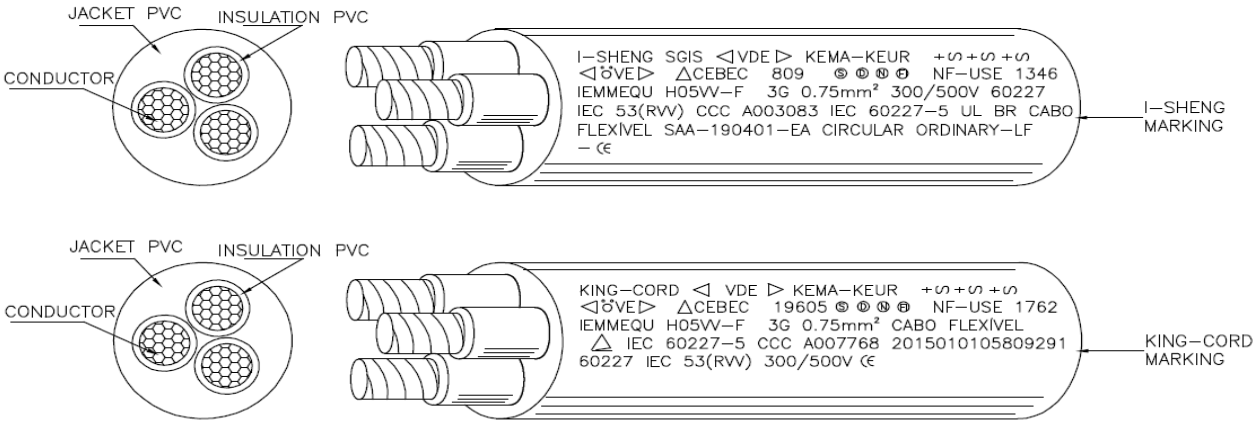

KING CORD Confidential Proprietary

No.	Items項目	Conditions for Test測試條件	Specification判定規格
1	Insulation Resistance 絕緣阻抗 (IEC884 C17 OR IEC320 C15)	A quantity of No.7 lead drop shot is to be placed in a container,Apply a voltage of 500V DC for 1 min. at an ambient temperature of 25±5℃,between: A)Live parts of opposite polarity B)Live parts and ground or contact with ground afer which the measurement shall be made. Show below as: Megohmmeter 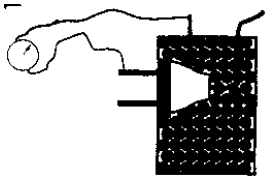	5MΩ or more
2	Dielectric Strength 電氣強度 (IEC884 C17 OR IEC320 C15)	The test potential is to be supplied from a 500VA or large capacity testing transformer,and be increased from zero until 2000V(in fact,required 1250V) is reached,then held at the voltage for 1min.Current leakage 2mA. A)Live parts of opposite polarity B)Live parts and ground or contact with ground C)Between conductor and outside body Frequency:50/60Hz 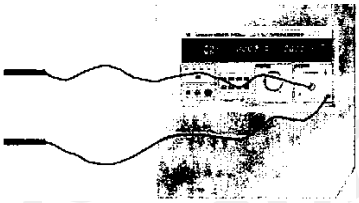	Without breakdown or flashover
3	Moisture Resistance 抗潮濕性 (IEC884 C16.3 OR IEC320 C14)	The humidity cabinet can be used. Relative humidity:91%-95% Temperature: 20-30℃ The specimens are kept in the cabinet for -168h(7 days) for connector with earthing contact,and for appliance inlets with earthing accessories,not incorporated in other equipment -48h(2 days) in all other cases.	After this treament, the specimen shall be withstand dieletric strength
4	Temperature Rise 溫升測試 (IEC884 C19 OR IEC320 C21)	Test current:1.25 times rated cur Test time for1h Contact show in below: 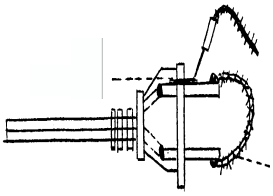	The temperature rise of the terminals and contact is no more than 45K
5	Contact Resistance 接觸阻抗 (IEC884 C11.5)	Insert the cord connector straight into the receptacle, measurement shall be made between the connector and the receptacle only.Test current :1A DC. Ambient temperature :25±5.Insert the cord connector into the receptacle as shown below ,and measure the contact resistance by the voltage drop method. 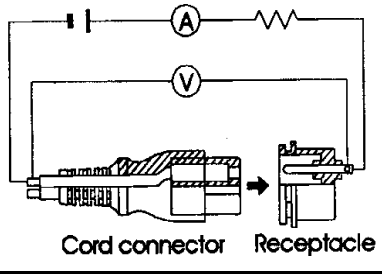	No more than 50mΩ

KINGCO Confidential Proprietary

<table>
<tr><th>No.</th><th>Items項目</th><th>Conditions for Test測試條件</th><th>Specification判定規格</th></tr>
<tr>
<td>6</td>
<td>Withdraw Force
拔插力
(IEC320 C16)</td>
<td>Withdraw the connector straight into the standard guage (mating plug),First The connector is inserted to the full depth into and withdraw from the appropriate appliance inlet 10 times,It is then again inserted for a principal mass is such that it exerts a force equal specified in the table .Verification of the minimum withdraw force is applied to each connector,the total mass of pplicable force as show
<table>
<tr><th rowspan="3">Type</th><th colspan="3">Withdraw force N(Kg)</th></tr>
<tr><th colspan="2">Multi-Pin guage</th><th>Single-Pin guage</th></tr>
<tr><th>Maximum</th><th>Minimum</th><th>Minimum</th></tr>
<tr><td>0.2A~2.5A</td><td>50(5.1)</td><td>13(1.3)</td><td>1.5(0.15)</td></tr>
<tr><td>>2.5A~6A</td><td>50(5.1)</td><td>13(1.3)</td><td>1.5(0.15)</td></tr>
<tr><td>>6A~10A</td><td>50(5.1)</td><td>13(1.3)</td><td>1.5(0.15)</td></tr>
<tr><td>>10A~16A</td><td>60(6.1)</td><td>15(1.5)</td><td>2.0(0.20)</td></tr>
<tr><td>>16A~32A</td><td>80(8.1)</td><td>30(3.1)</td><td>3.0(0.3)</td></tr>
</table>
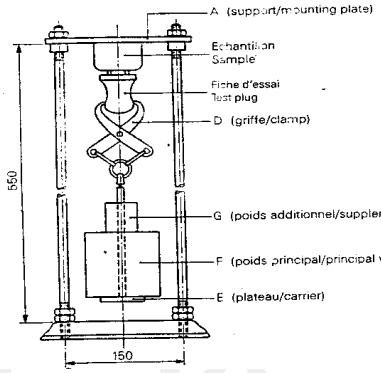

</td>
<td>During the verification of the maximum withdraw force test,The principal mass is hung on the connector without jolting and the supplementary mass is allowed to fall from a height of 5cm on to the principal mass,the connector shall not remain in the appliance After verification of the minimum withdraw force test,the gauge shall be not removed 0.079inch(2mm).During the single-pin gauge test,the gauge shall not fall from the contact assembly without 3sec.</td>
</tr>
<tr>
<td>7</td>
<td>Flexing Test
彎曲測試
(IEC884 C23.4 OR IEC320 C22.4)</td>
<td>A molded-on attachment plug and cord connector shall be capable withstanding the test specified as show in the table: molded to 20inch(508mm) lengths of flexible cord is required,and each cord approximately 12 inches(305mm) from the point of rotation to the weight,see fig 94.1
<table>
<tr><th>Cord type (mm²)</th><th>Load weight (g)</th><th>Angle (°)</th><th>Frequency (turns)</th><th>Flexing No. for connector (turms)</th><th>Flexing No. for plug</th></tr>
<tr><td>other</td><td>10N(1020g)</td><td>45°</td><td>60r/min</td><td>20000</td><td>10000</td></tr>
<tr><td>>0.75</td><td>20N(2040g)</td><td>45°</td><td>60r/min</td><td>20000</td><td>10000</td></tr>
</table>
A sample shall be secured to the flexing apparatus as below:
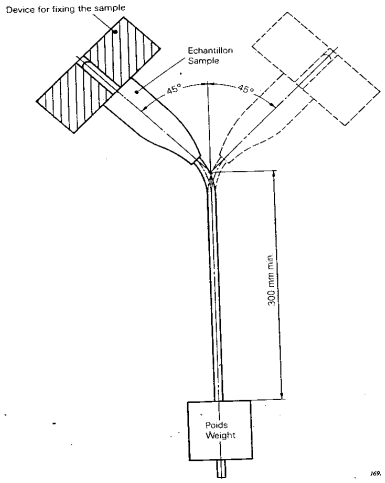

</td>
<td>After the test the sample
shall be no damage or breakage</td>
</tr>
</table>

<table>
<tr><th>No.</th><th>Items項目</th><th>Conditions for Test測試條件</th><th>Specification判定規格</th></tr>
<tr><td>8</td><td>Heat Pressure Test
球壓測試
(IEC884 C25.2 OR IEC320 C24.1)</td><td>A ball pressure test is made in a heating cabinet at a temperature of 125±2℃ and applied a steel ball of 5mm diameter against this sample surface with a force of 20N.after 1 hour,the tested ample
is cooled down within 10 seconds.see as following fig.:
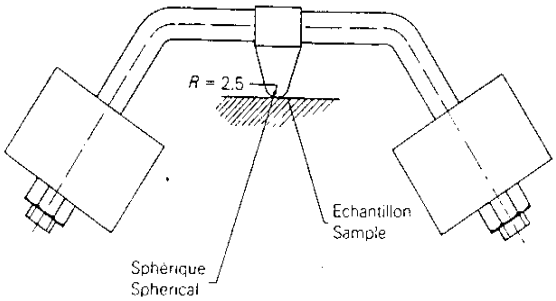
</td><td>the diameter of the impression caused by the ball shall not exceed 2 mm</td></tr>
<tr><td>9</td><td>Anchorage Test
錨錠測試
(IEC884 C23.2 OR IEC320 C22.3)</td><td>A sample is placed in the test apparatus(as below) so that the axis of the flexible cable is vertical where it enters the sample.The flexible cable is then subjected to show in the table:
<table><tr><th>Rating</th><th>Pull</th></tr><tr><td>I<=2.5A</td><td>50</td></tr><tr><td>2.5A<I<16A U<250V</td><td>60</td></tr><tr><td>I<16A U>250V</td><td>80</td></tr><tr><td>I>16A</td><td>100</td></tr></table>
Immediately afterwards, the flexible cable is subjected for
<table><tr><th rowspan="2">Rating of plug or portable socket-outlet</th><th colspan="5">Flexible cable (number of cores x cross-section in mm²)</th></tr><tr><th>2 x 0,5</th><th>2 x 0,75</th><th>3 x 0,5</th><th>3 x 0,75</th><th>(2 or more) x 1</th></tr><tr><td>Up to and including 16 A and 250 V</td><td>0,1 Nm</td><td>0,15 Nm</td><td>0,15 Nm</td><td>0,25 Nm</td><td>0,25 Nm</td></tr><tr><td>16A and above 250 V</td><td>-</td><td>-</td><td>-</td><td>-</td><td>0,35 Nm</td></tr><tr><td>Above 16 A</td><td>-</td><td>-</td><td>-</td><td>-</td><td>0,425 Nm</td></tr></table>
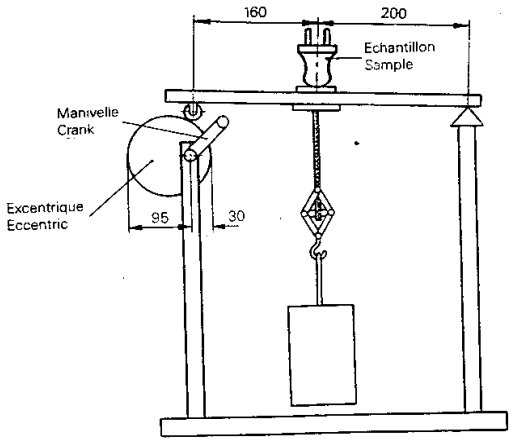
</td><td>After the test,the flexible shall not have been displaced by more than 2mm,or no break.</td></tr>
</table>

No.	Items項目	Conditions for Test測試條件	Specification判定規格
10	Breaking Capacity 分斷容量 (IEC320 C19)	The connector and appliance inlet are connected and disconnected 50 times (100 strokes) at a rate of 30 strokes per minute.the length of a stroke of the test apparatus is between 50mm and 60mm, The periods during which the test current is passed from the connection to the subsequent disconnection of the accessories are 1.5(+0.5,-0)s,The test voltage is 275V,the test current is 1.25 times rated current and the power factor is at least 0.95 for 10A and 16A connectors and 0.6±0.05 for other connectors. 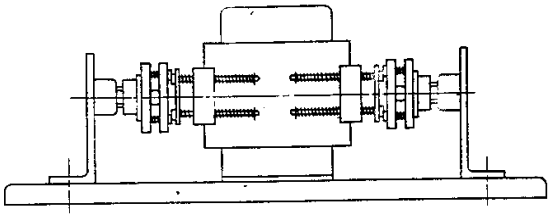 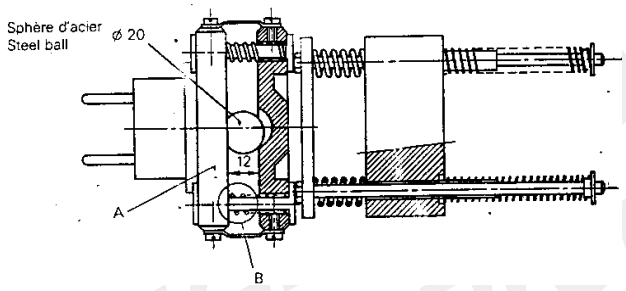	The specimen shall show no damage impairing its further use and the entry holes for the pin shall not show any serious damage
11	Tumbling Barrel Test 滾桶測試 (IEC884 C24.2)	A sample is tested by 10 falls per minute in a tumbling barrel as shown below. The flexible cable shall be cut for a free length of about 100mm from the accessory. The number of falls shown in the table; Weight / Numbers <100g / 1000 >100g / 500 >200g / 100 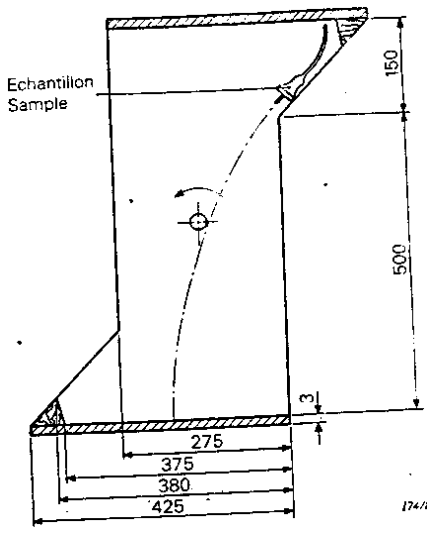	After the test,no part detached or loosened,the pin shall not turn when a torque of 0.4Nm is applied,first in one direction for 1 min and then in the opposite direction for 1 min.

KUNG Confidential Pro-prietary

No.	Items項目	Conditions for Test測試條件	Specification判定規格
12	Low Temperature Impact 低溫撞擊測試 (IEC884 C24.4)	The specimen is subjected to an impact test by mean of an apparatus shown in below.At a temperature of -15±2℃ for at least 16h.The falling weight of 1000±2g is allowed to fall from a height of 100 mm. 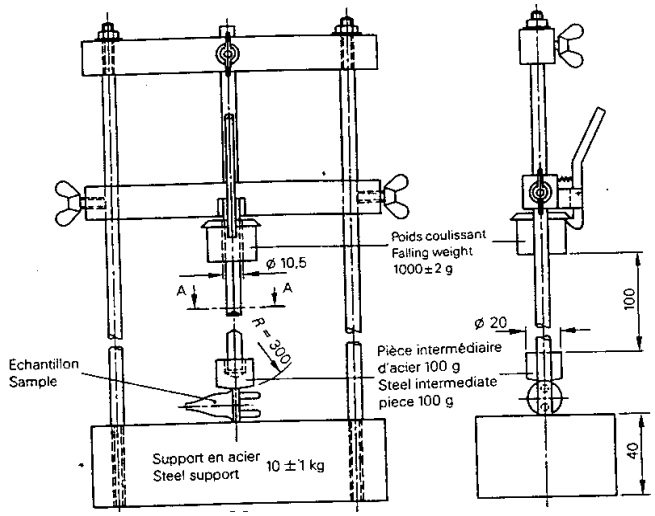 	No damage within the meaning of the standard
13	Resistance to Aging 老化試驗 (IEC884 C16.1)	The temperature in the cabinet is 70±2℃.The specimen is kept in the cabinet for 7 days (168h). After the treatment, the specimen is kept at a room temperature and relative humidity between 45%-55% for least 4 days (96h).after,the specimen shall show no crack visible with normal or corrected vision. A forefinger wrapped in a dry piece of rough cloth is pressed on the specimen with a force of 5N. No traces of the cloth shall remain on the specimen and the	After the test,the specimen shll show no damage which would lead to non-compliance with the standard
14	Compression Test 壓迫試驗 (IEC884 C24.5)	A specimen is pressed between two flat surfaces with a force of 150N for 5 min,as shown in fig. After 15 min,remove from the test apparatus and check it.A specimen is subjected to a compression test in the nanner as shown in below,the temperature of the pressure plate :23±2℃. Applied force :300N The specimen is placed in each position as shown in fig. for 1 min and shall be checked,15 min after the removal from the test apparatus. 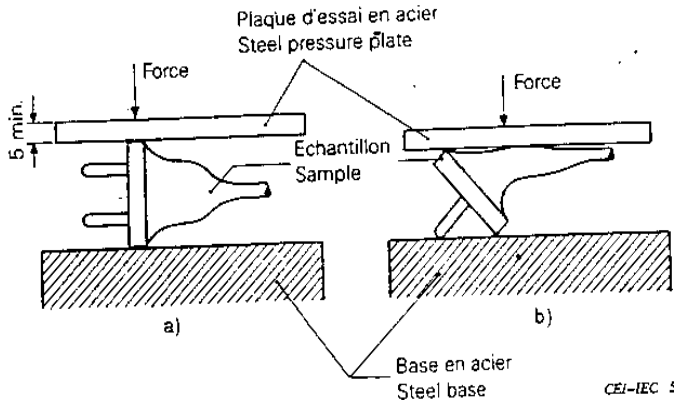 	No damage within the meaning of the standard

Confidential Proprietary

King-Cord Co.,Ltd

Material Management Schedule

Edition:P Date: JAN. 3, 2023

No	Banned or Restricted Substances		Threshold	Controlled Application	Effective Date	Test Methods
1	Metal	Cd and the Compound	<100ppm	Switches, springs, connectors, housings and PCBs, contacts, batteries	Restricted immediately	IEC 62321-5
2	Metal	Pb and the Compound	<1000ppm	Solder, glass, PVC stabilizer	Restricted immediatel	IEC 62321-5
			<40000ppm	Copper alloy containing	Copper alloy is exempt from ROHS exclusion "6C".	
3	Metal	Hg and the Compound	<1000ppm	All applications	Banned immediately	IEC 62321-4
4	Metal	Cr^{6+} and the Compound	<1000ppm	All applications	Restricted immediately	IEC 62321-7/ IEC 62321-5
5	Organic Bromine Compound	Phthalates (DEHP, DBP, BBP, DIBP)	<1000ppm	All applications	Banned immediately	IEC 62321-8
6	Organic Bromine Compound	Polybromides biphenyls(PBBs)	<1000ppm	All applications	Banned immediately	IEC 62321-6
7	Organic Bromine Compound	Polybromides Diphenyl Ethers(PBDEs)(Including decabromodiphenylether[DecaBDE])	<1000ppm	All applications	Banned immediately	IEC 62321-6
8	Organic Bromine Compound	Other Organic Bromine Compound	Not Detectable	All applications	Banned immediately	
9	Organic Chlorine Compound	Polychlorinated Biphenyls(PCB)	Not Detectable	All applications	Banned immediately	
10	Organic Chlorine Compound	Polychlorinated Naphthalenes(PCN)	Not Detectable	All applications	Banned immediately	
11	Organic Chlorine Compound	Polychlorinated Terphenyls(PCT)	Not Detectable	All applications	Banned immediately	
12	Organic Chlorine Compound	Short-chain chlorinated paraffins(SCCP)	Not Detectable	All applications	Banned immediately	
13	Organic Chlorine Compound	Other Organic Chlorin Compound	Not Detectable	All applications	Banned immediately	
14	Organic Tin Compound		Not Detectable	All applications	Banned immediately	
15	Asbesos		Not Detectable	All applications	Banned immediately	
16	Azo Compound		Not Detectable	All applications	Banned immediately	
17	Formaldehyde		Not Detectable	All applications	Banned immediately	ISO 17353
18	Beryllium oxide		Not Detectable	All applications	Banned immediately	
19	Hydrofluorocarbon(HFC),Perfluorocarbon(PFC)		Not Detectable	All applications	Banned immediately	
20	Perfluorooctane sulfonates(PFOS)		Not Detectable	All applications	Banned immediately	
21	Specific benzotriazole		Not Detectable	All applications	Banned immediately	
22	hexabromocyclododecane (HBCD)		Not Detectable	All applications	Banned immediately	
23	perfluorooctanoic acid, its salts, and its precursors (PFOA)		Not Detectable	All applications	Banned immediately	
24	long-chain perfluorocarboxylic acids, their salts, and their precursors (LC-PFCAs)		Not Detectable	All applications	Banned immediately	
25	The total Hg、Cd、 Cr、Pb in the packing should be below 100ppm				Restricted immediately	
	PS: KING-CORD is RoHS 2.0, EU REACH compliant and meets Sony SS-00259 Green Partner standards.					

KING-CORD CO.,LTD

CERTIFICATE OF COMPLIANCE

Edition: P

KING-CORD hereby warrants and guarantees that our product POWER SUPPLY CORDS is compliant with Directive(EU) 2015/863 amending 2011/65/EU Of the Council on the Restriction of the Use of Certain Hazardous Substances in Electrical and Electronic Equipment (RoHS 2.0), EU REACH(Registration, Evaluation, Authorization and Restriction of Chemicals) regulations and SONY SS-00259 standards.

KING-CORD CO.,LTD.

William Cheng

President

JAN. 3, 2023