REV.	DATE	DESCRIPTION	BY	APVD

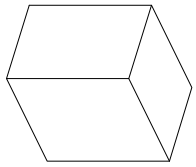

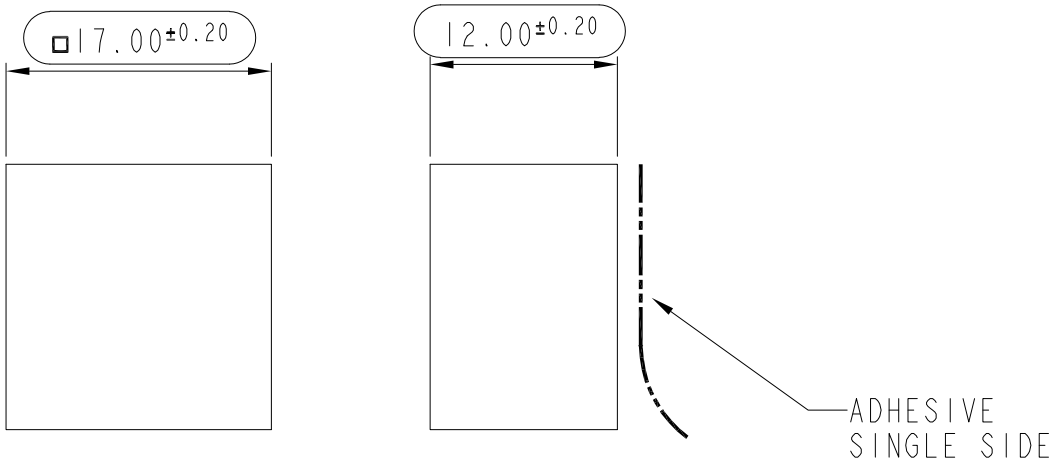

NOTES:
1. MATERIAL: THERMAL CONDUCTIVE PAD, TG-A6200.
2. COLOR: BLUE.
3. THERMAL CONDUCTIVITY: 6.2 W/mK.
4. FLAME RATING: UL 94V-0.
5. ADHESIVE ON SINGLE SIDE.
6. IQC INSPECTION DOCUMENT NO: QWI-024.

RANGE OF DIMENSION	TOLERANCE CLASS DESIGNATION f	V m	V c
UP TO 30	±0.10	±0.20	±0.50
ABOVE 30~120	±0.15	±0.30	±0.80
ABOVE 120~315	±0.20	±0.50	±1.20
ABOVE 315~1000	±0.30	±0.80	±2.00
ANGLE ±1° (±1.75/100)			

THIRD ANGLE PROJECTION

UNITS:mm	SCALE: 2/1	SHEET: 1 OF 1	MODEL NO.: ALL
MATERIAL: SEE NOTES		TREATMENT: NONE	
DSGD by	Ferris Tsai	2023-11-21	PART NAME: THERMAL PAD (L17*W17*t12 TG-A6200)
CHK by			
APVD by			PART NO.: 3H010010400 REV. 0
APVD NO.:		3D FILE NAME: TIM_17X17XH12	DIVA Laboratories ,Ltd.