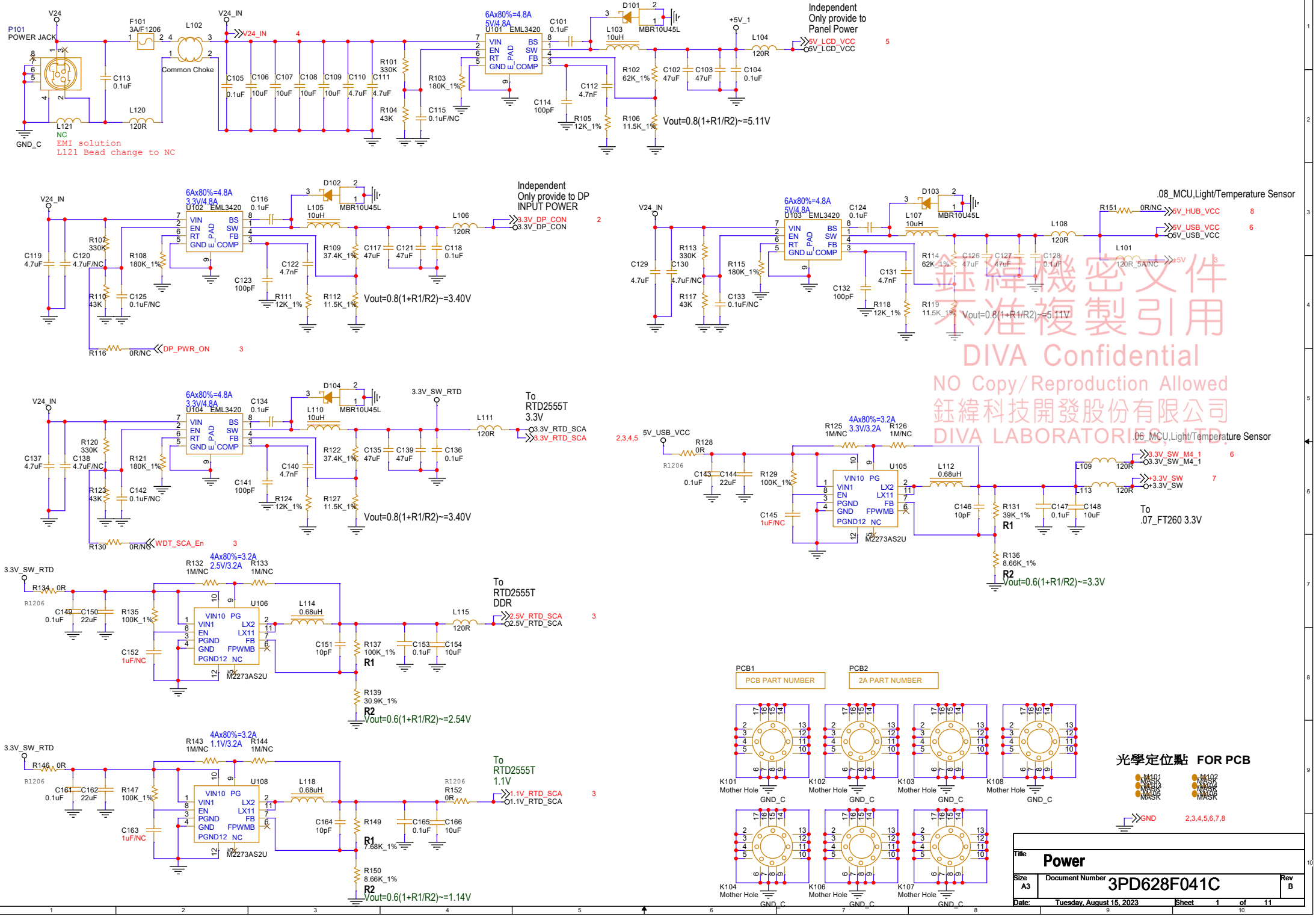

鈺緯機密文件
不准複製引用
DIVA Confidential
NO Copy/Reproduction Allowed
鈺緯科技開發股份有限公司
DIVA LABORATORIES, LTD.

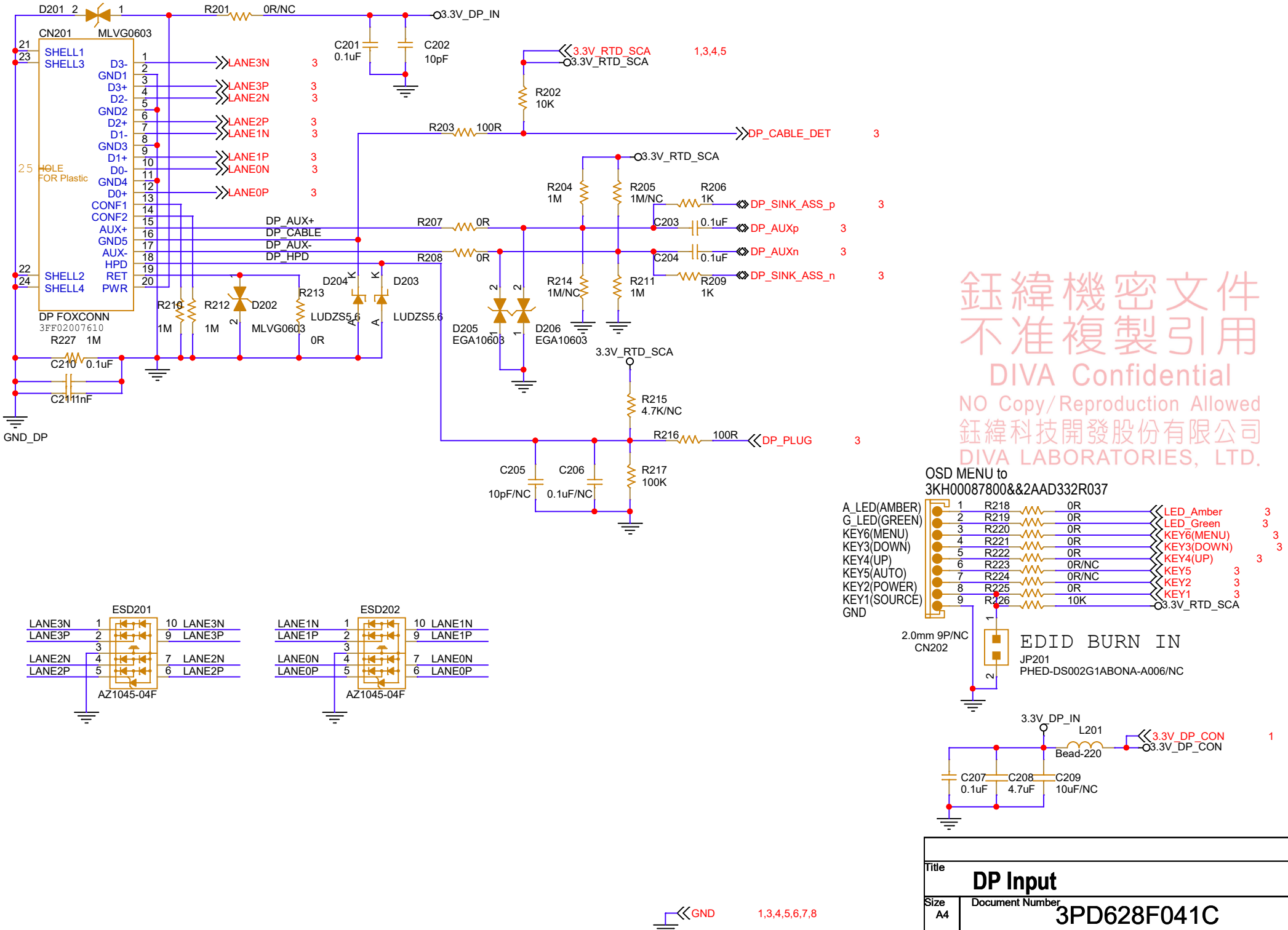

鈺緯機密文件
不准複製引用
DIVA Confidential
NO Copy/Reproduction Allowed
鈺緯科技開發股份有限公司
DIVA LABORATORIES, LTD.

Title	DP Input	
Size A4	Document Number 3PD628F041C	Rev B
Date: Thursday, June 15, 2023	Sheet 2 of 11	

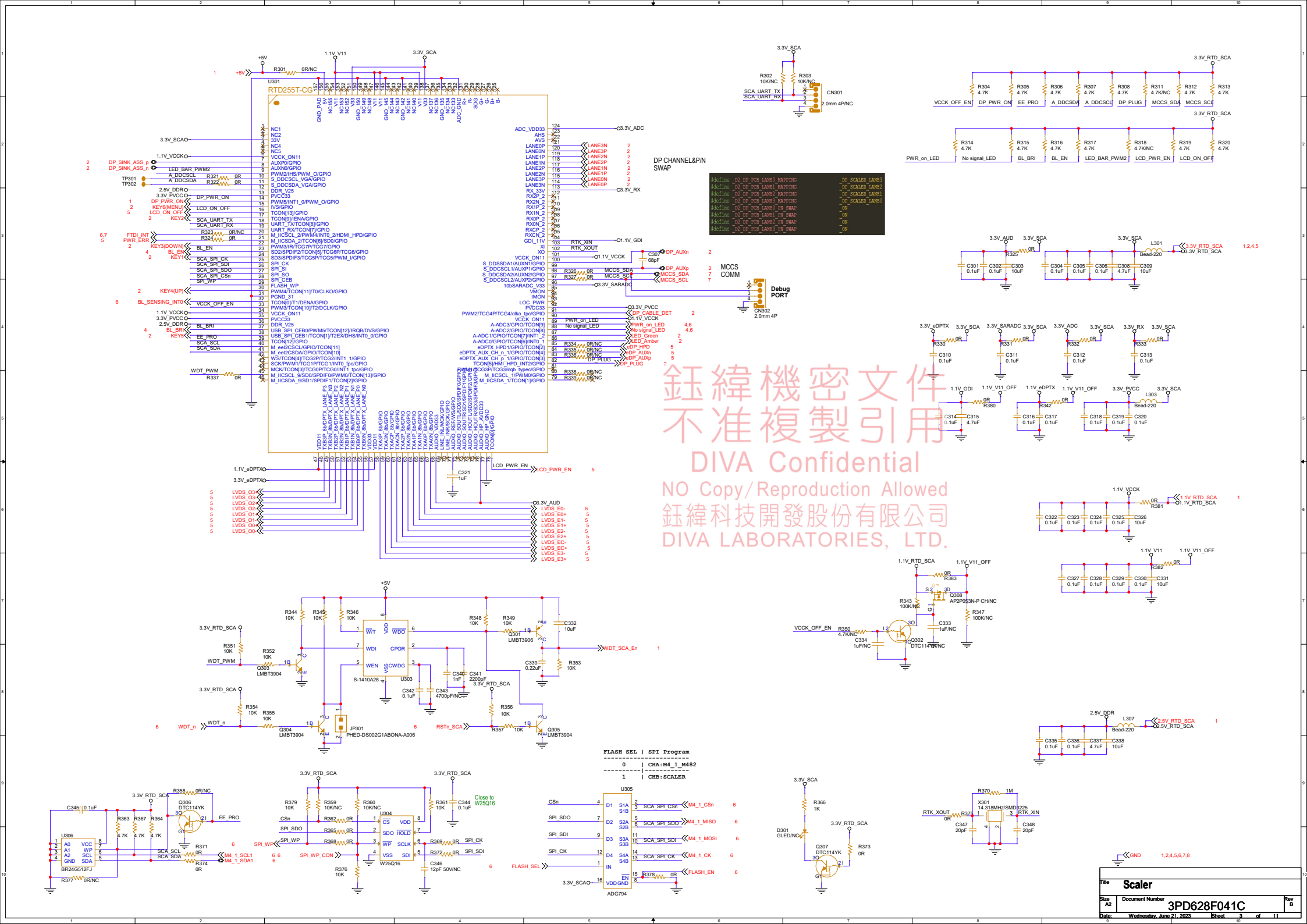

鈺緯機密文件
不准複製引用
DIVA Confidential
NO Copy/Reproduction Allowed
鈺緯科技開發股份有限公司
DIVA LABORATORIES, LTD.

Title	Scaler
Size	A2
Document Number	3PD628F041C
Rev	B
Date:	Wednesday, June 21, 2023
Sheet	3 of 11

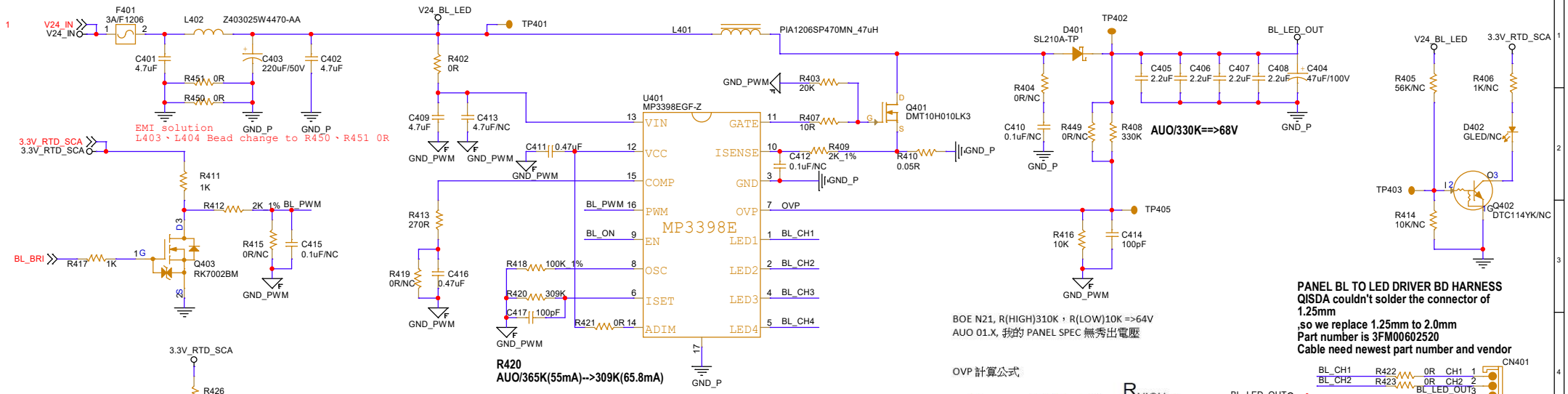

電流計算公式

$$ILED(mA) = \frac{20362}{R_{ISET}(k\Omega)}$$

OVP 計算公式

$$V_{OVP} = 2(V) \times (1 + \frac{R_{HIGH}}{R_{LOW}})$$

PWR_on_LED | No signal_LED Status

0	1	Green On/Oranger Off
1	0	Green Offn/Orange On

Table 5 Status Indicators

MODE	Indicator LED
System Power Off	Unlit
Power On - Normal Operation	Green
Power On – Supply out of range	Green
Power On – No signal	Green (5 sec)
Power On- Normal operation but Backlight compensation failure	Green + Amber blinking
Power On- No signal and Backlight compensation failure	Amber

4.3 Backlight input signal characteristics G238HAN01_4

(Ta=25℃)

Symbol	Description	Min.	Typ.	Max.	Unit	Remark
Is	LED String Current	-	65	70	[mA]	100% duty ratio of LED chip
Vs	LED String Voltage	48.6	55.8	61.2	[Volt]	Is=65mA @ 100% duty ratio; *Note 4-1, Note 4-5*
ΔVs	Maximum Vs Voltage Deviation of light bar	-	-	3.6	[Volt]	Is=65mA @ 100% duty ratio; *Note 4-2*
P_{BLU}	LED Light Bar Power Consumption	-	14.51	15.91	[Watt]	***Note 4-3***
LT_{LED}	LED Life Time	50,000	-	-	[Hour]	***Note 4-4***
OVP	Over Voltage Protection in system board	110% Vs (max)	-	-	[Volt]	***Note 4-5***

鈺緯機密文件
不准複製引用
DIVA Confidential
NO Copy/Reproduction Allowed
鈺緯科技開發股份有限公司
DIVA LABORATORIES, LTD.

Title	LED Driver and Light BAR		
Size A3	Document Number 3PD628F041C		Rev B
Date: Thursday, June 15, 2023	Sheet 4 of 11		

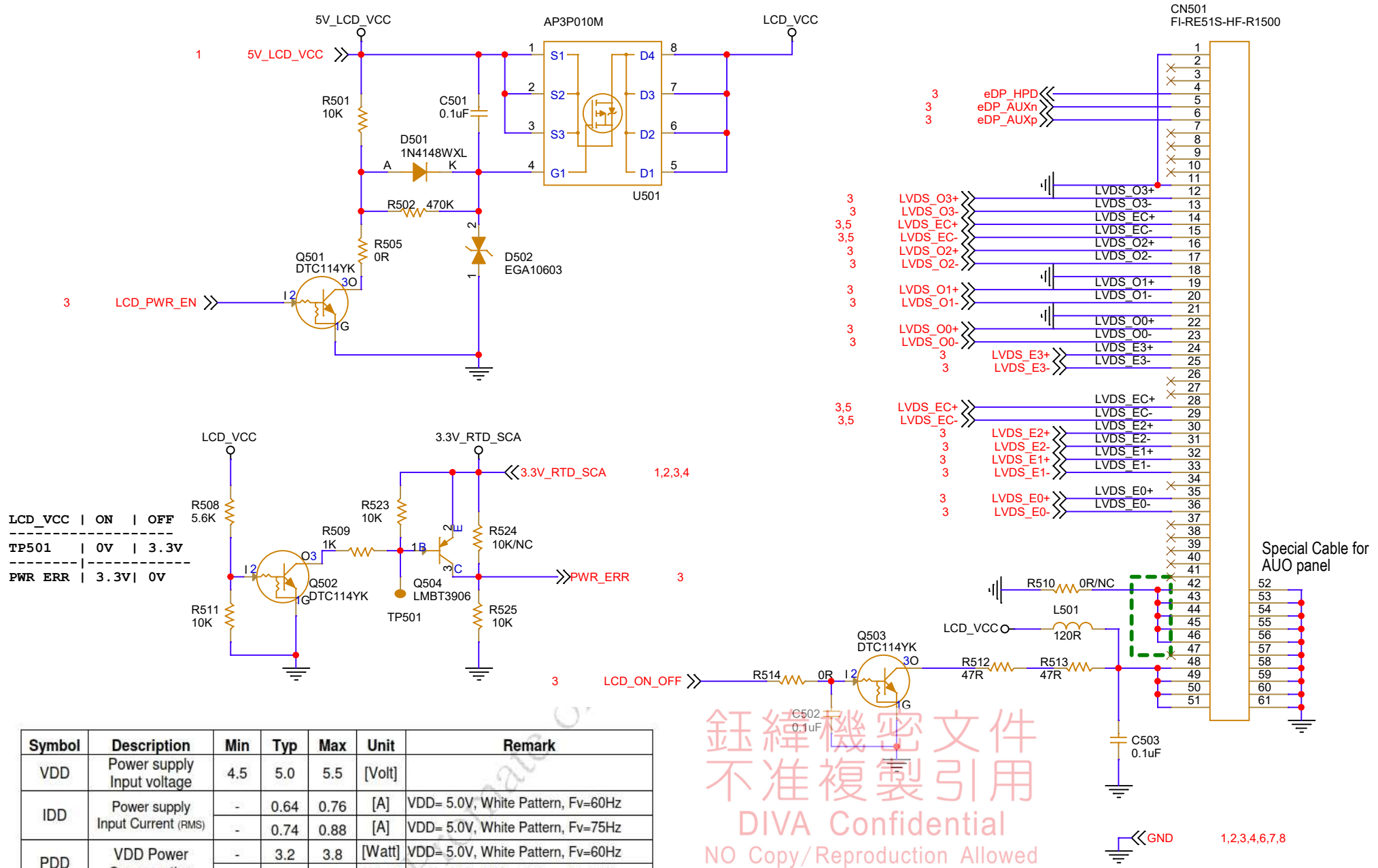

LCD_VCC	ON	OFF
TP501	0V	3.3V
PWR ERR	3.3V	0V

Symbol	Description	Min	Typ	Max	Unit	Remark
VDD	Power supply Input voltage	4.5	5.0	5.5	[Volt]	
IDD	Power supply Input Current (RMS)	-	0.64	0.76	[A]	VDD= 5.0V, White Pattern, Fv=60Hz
		-	0.74	0.88	[A]	VDD= 5.0V, White Pattern, Fv=75Hz
PDD	VDD Power Consumption	-	3.2	3.8	[Watt]	VDD= 5.0V, White Pattern, Fv=60Hz
		-	3.7	4.4	[Watt]	VDD= 5.0V, White Pattern, Fv=75Hz
IRush	Inrush Current	-	-	3.0	[A]	***Note 3-1***
VDDrp	Allowable VDD Ripple Voltage	-	-	500	[mV]	VDD= 5.0V, Black Pattern, Fv=75Hz

鈺緯機密文件
不准複製引用
DIVA Confidential
NO Copy/Reproduction Allowed
鈺緯科技開發股份有限公司
DIVA LABORATORIES, LTD.

Title: **LVDS Output to Panel**

Size	Document Number	Rev
A4	3PD628F041C	B

Date: Thursday, June 15, 2023 Sheet 5 of 11

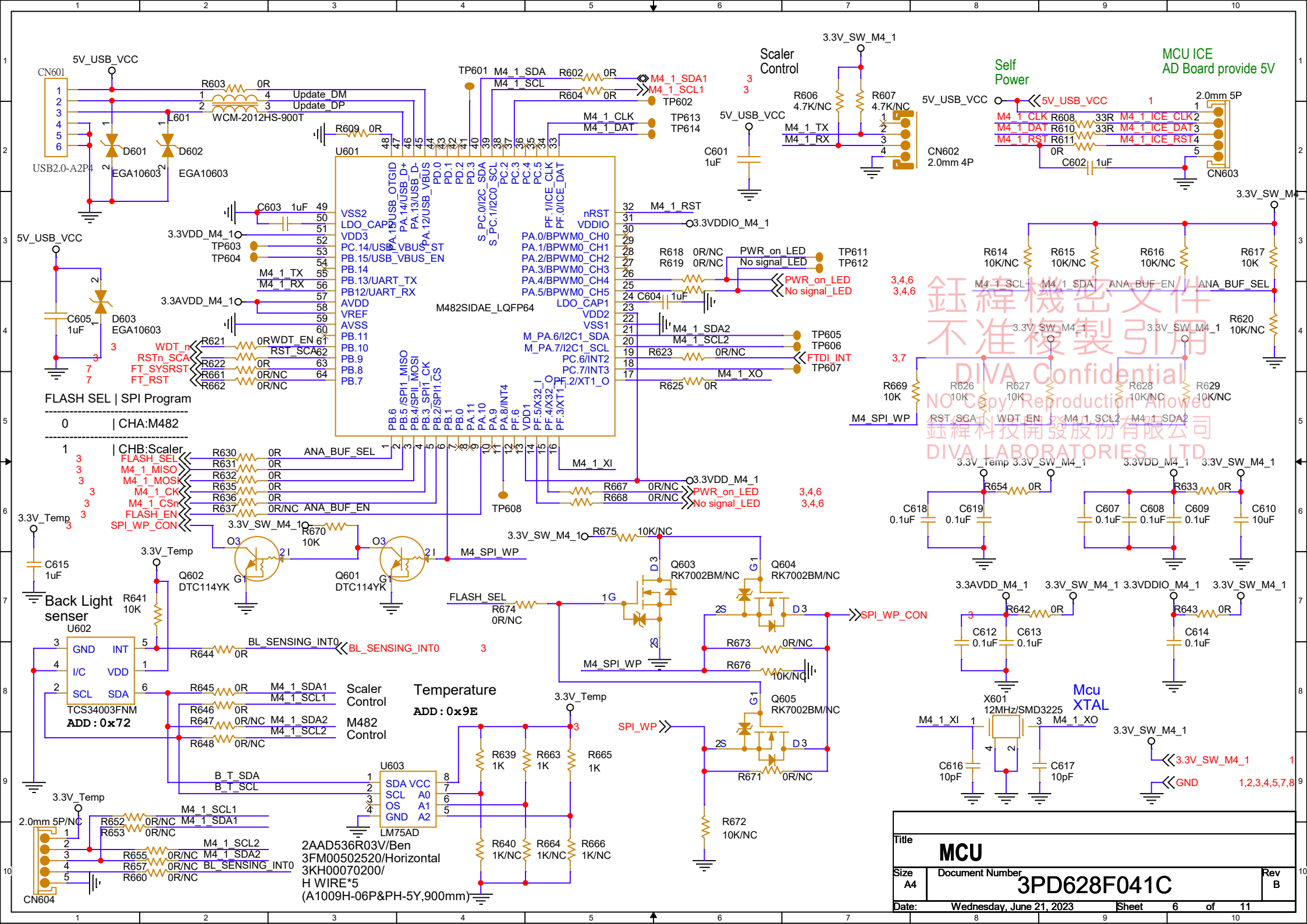
Scaler Control
Self Power
MCU ICE
AD Board provide 5V
U601
M482SIDAE_LQFP64
FLASH SEL | SPI Program
0 | CHA:M482
1 | CHB:Scaler
Back Light senser
U602
TCS34003FNM
ADD : 0x72
Scaler Control
M482 Control
Temperature
ADD : 0x9E
U603
LM75AD
Mcu XTAL
X601
12MHz/SMD3225
2AAD536R03V/Ben
3FM00502520/Horizontal
3KH00070200/
H WIRE*5
(A1009H-06P&PH-5Y,900mm)
鈺緯機密文件
不准複製引用
DIVA Confidential
NO Copy/Reproduction Allowed
鈺緯科技開發股份有限公司
DIVA LABORATORIES, LTD.
Title
MCU
Size A4
Document Number 3PD628F041C
Rev B
Date: Wednesday, June 21, 2023
Sheet 6 of 11

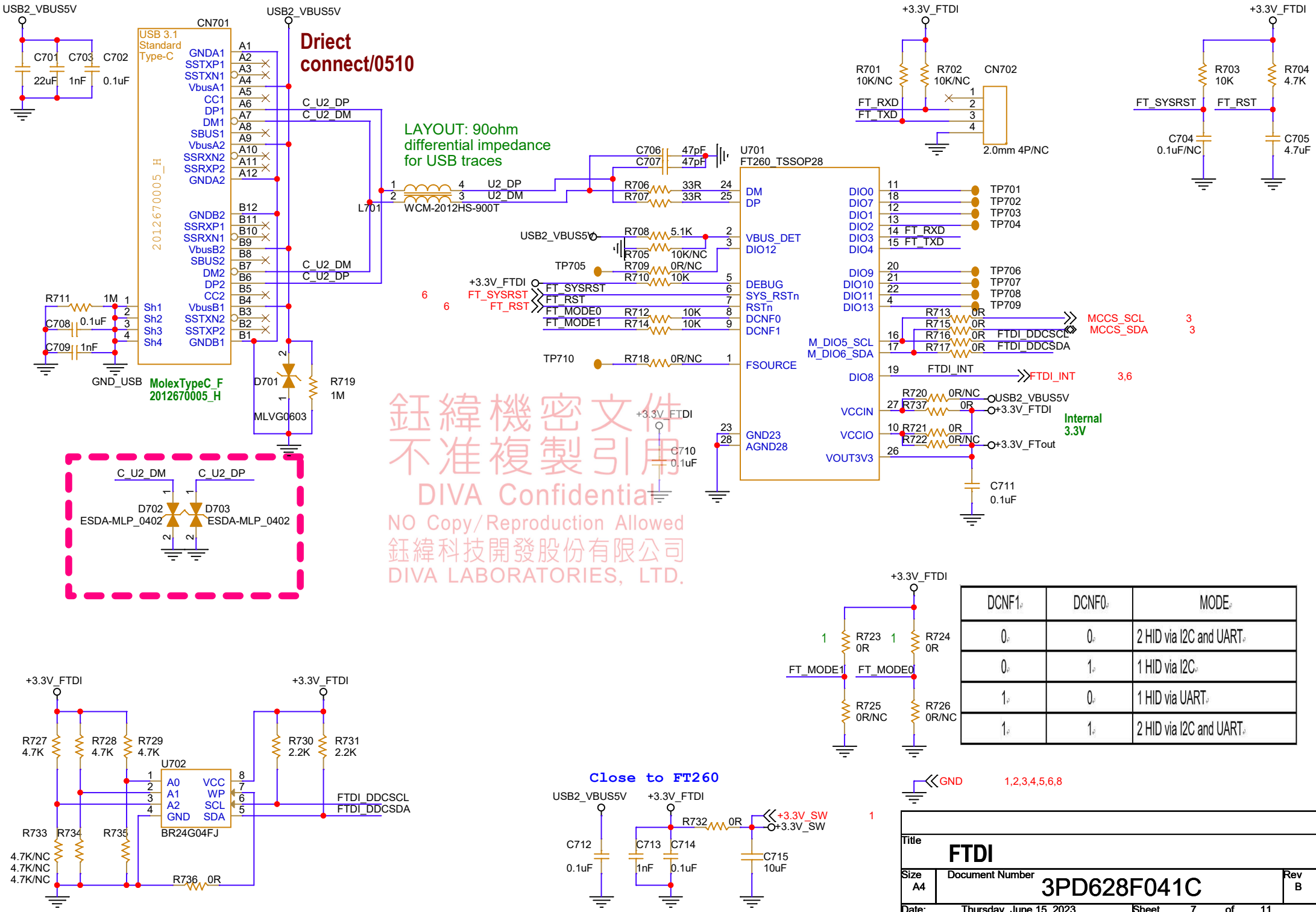

鈺緯機密文件
不准複製引用
DIVA Confidential
NO Copy/Reproduction Allowed
鈺緯科技開發股份有限公司
DIVA LABORATORIES, LTD.

DCNF1	DCNF0	MODE
0	0	2 HID via I2C and UART
0	1	1 HID via I2C
1	0	1 HID via UART
1	1	2 HID via I2C and UART

Title	FTDI		
Size A4	Document Number 3PD628F041C		Rev B
Date: Thursday, June 15, 2023	Sheet 7	of 11	

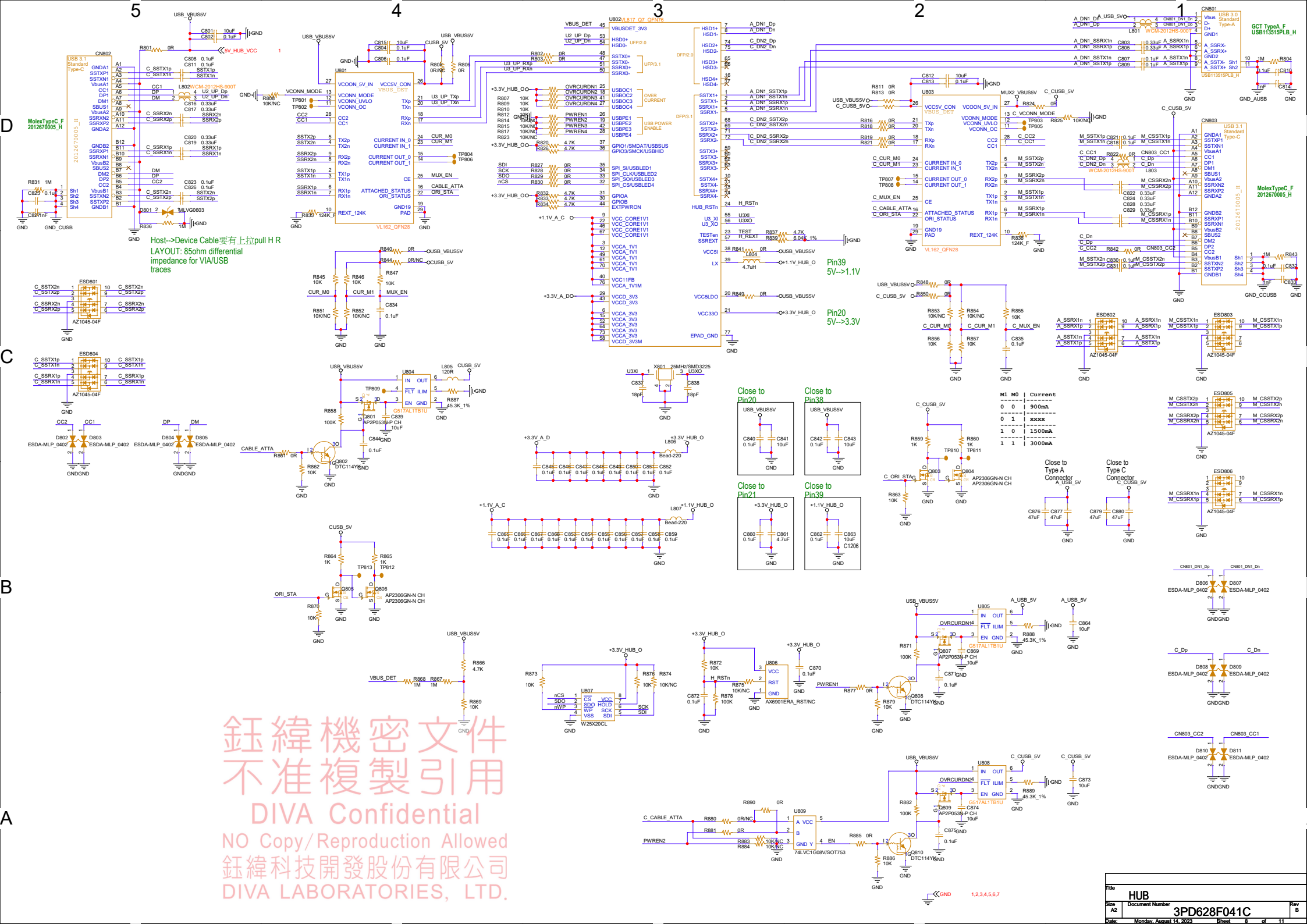
5
4
3
2
1
D
C
B
A
USB_VBUSS5V
5V_HUB_VCC
CN802
USB 3.1 Standard Type-C
MolexTypeC_F 2012670005_H
Host-->Device Cable要有上拉pull H R
LAYOUT: 85ohm differential impedance for VIA/USB traces
U801
VL162_QFN28
U802/VL817_Q7_QFN76
CN801
USB 3.0 Standard Type-A
GCT TypeA_F USB1135I5PLB_H
U803
VL162_QFN28
CN803
MolexTypeC_F 2012670005_H
ESD801
ESD802
ESD803
ESD804
ESD805
ESD806
AZ1045-04F
U804
U805
U806
U807
U808
U809
G517AL1TB1U
AP2306GN-N CH
W25X20CL
74LVC1G08V/SOT753
Close to Pin20
Close to Pin38
Close to Pin21
Close to Pin39
Close to Type A Connector
Close to Type C Connector
Pin39 5V-->1.1V
Pin20 5V-->3.3V
M1 M0 | Current
0 0 | 900mA
0 1 | xxxx
1 0 | 1500mA
1 1 | 3000mA
鈺緯機密文件
不准複製引用
DIVA Confidential
NO Copy/Reproduction Allowed
鈺緯科技開發股份有限公司
DIVA LABORATORIES, LTD.
Title HUB
Size A2
Document Number 3PD628F041C
Rev B
Date: Monday, August 14, 2023
Sheet 8 of 11

QuickSilver Main Board
Power Tree

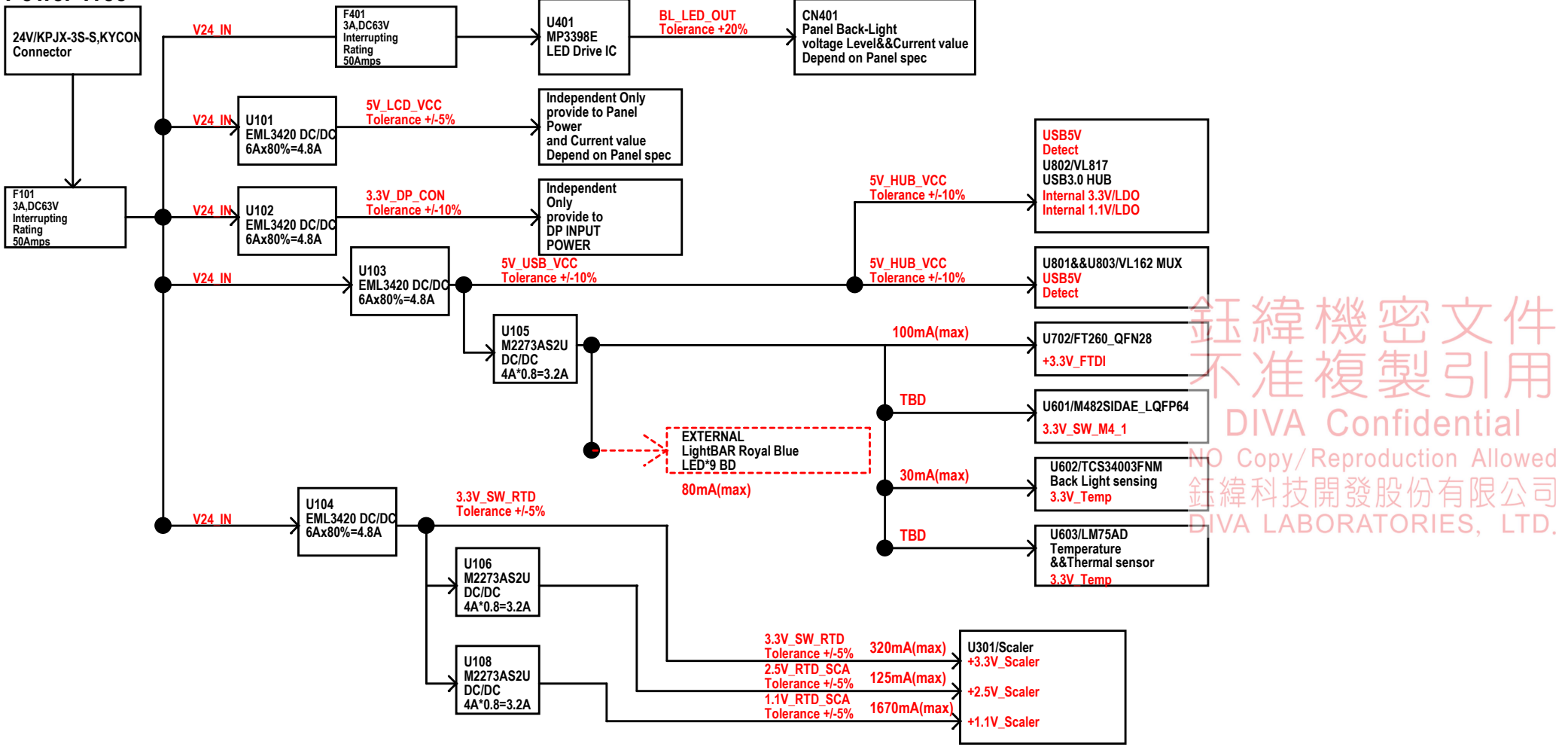

鈺緯機密文件
不准複製引用
DIVA Confidential
NO Copy/Reproduction Allowed
鈺緯科技開發股份有限公司
DIVA LABORATORIES, LTD.

Shelby Main Board Block Digram

Main Board

P101

Power DIN — KYCON, KPJX-3S-S

19V ~ 30V

Panel BL

DC to DC

LED Drive IC

PWM Control

LED DRIVER

Panel

LVDS BUS

CN201

DisplayPort

(909DF20FCT01NCAC,COXOC)

Scaler

LVDS Connector FI-RE51S-HF-R1500,JAE

Light sensing&& Temperature&& Thermal sensor

SCA_IIC

24LC512-I/SN EEPROM

CN601

USB Type-A 2.0 Connect to FLASH Memory &&Update Scaler firmware USBA-FSS1WDB-B,SUPERIOR

M4/ARM Scaler firmware

SLAVE<--IIC<--MASTER

SPI

W25Q16JV Serial Flash

MCCS Ver2.2a Communication

MASTER-->IIC-->SLAVE

鈺緯機密文件
不准複製引用
DIVA Confidential
NO Copy/Reproduction Allowed
鈺緯科技開發股份有限公司
DIVA LABORATORIES, LTD.

PHILIPS System

USB TypeA /Connect AD Board Current Limit 500mA

USB2_VBUS5V

Display System USB3.0

CN701

USB Type-C /Connect to PC

Molex TypeC_Female 2012670005_H

USB2_VBUS5V

USB2.0 High Speed

FT260 HID-class USB to UART/I2C Bridge IC

M24C04FRMN6TP Module ID

USB TypeA /Connect External HUB Current Limit 500mA

USB_VBUS5V

Display USER USB3.0

CN802

USB Type-C /Connect to PC

Molex TypeC_Female 2012670005_H

USB_VBUS5V

USB3.0 Super Speed

USB3.0 MUX VL162

USB3.0 HUB VL817

PORT1

PORT2

USB3.0 MUX VL162

USB3.0 Super Speed

Q807

PWREN1

Q809

PWREN2

USB3.0 Super Speed

Current Limiters Keep in 500mA

GMT G517AL1TB1U

GMT G517AL1TB1U

CN803

C_CUSB_5V

USB Type-C

Molex TypeC_Female 2012670005_H

USB Type C external Board

Molex TypeC_Female 2012670005_H&& GCTTypeC_Female 4160030230C_V

CN801

A_USB_5V

USB TypeA

GCT TypeA_Female_ USB113515PLB_H

USB Type A external Board

GCT TypeA_Female_ USB113515PLB_H&& USB1086GFB_V

Date	Notification
2023/02/13	Replace PCBA version A to Version B
2023/02/13	1 . L119 Change to R152 L302 Change to R380 L304 Change to R381 L305 Change to R382 L306 Change to R383 2. Q308 NC 3. Remove Light Bar circuit 4. Add D403 5. Replace TI/TPS2001DDBR to G517AL1TB1U and Keep USB downstream current at 500mA 6. Add Q601~Q605 SPI protect circuit
2023/02/17	1. Add D801/R836 For ESD
2023/02/21	1. Add L121 2. Q402,R405,R406,R414 change to NC 3. 24V Input capacitor<300uF C120 change to NC C130 change to NC C138 change to NC C413 change to NC
2023/02/24	1. Follow Philips suggestion to define ground name Page1 GND_C Page2 GND_DP Page4 GND_P 2. Add R227,C210,C211 at GND_DP 3. Add L403,L404 at GND_P 4. Modified Block Diagram
2023/05/16	Document Number 3PD628F041B -> 3PD628F041B-1 EMI solution 1. L121 Bead change to NC 2. L403、L404 Bead change to 0 ohm
2023/06/15	Document Number 3PD628F041B-1 -> 3PD628F041C EMI solution 1. L403、L404 Bead change to R450、R451 0 ohm
2023/06/21	X301/X601/X801 footprint xtals-4p-p1_85-3_2x2_5-h0_8-q -> xtals-4p-p1_7-3_2x2_5-h0_8-q
2023/08/09	CN801、CN803 180 degree change to 90 degree CN801 usb-11p-p2_5-13_7x16_5-h7_15-Q -> USB-11P-P2_5-14_4x6_9-H14_9-Q CN803 USB-28P-P0_5-9_39X8_3-H3_86-Q -> USB-28P-P0_5-8_94x3_16-H7_46-Q
2023/08/10	Add K107、K108 Add ESD806 ESD802、ESD803、ESD805 NC to AZ1045-04F
2023/08/11	Add D806、D807、D808、D809、D810、D811 R848、R811 NC-> 0 ohm
2023/08/15	K107、K108 MTH17P-O3_4M-O300-NP-B-Q -> MTH17P-O3M-O300-NP-B-Q

Title	<Title>	
Size: Custom	Document Number: 3PD628F041C	Rev: B
Date: Tuesday, August 15, 2023	Sheet 11 of 11	

鈺緯機密文件
不准複製引用
DIVA Confidential
NO Copy/Reproduction Allowed
鈺緯科技開發股份有限公司
DIVA LABORATORIES, LTD.