Xilinx 的包装方式如下

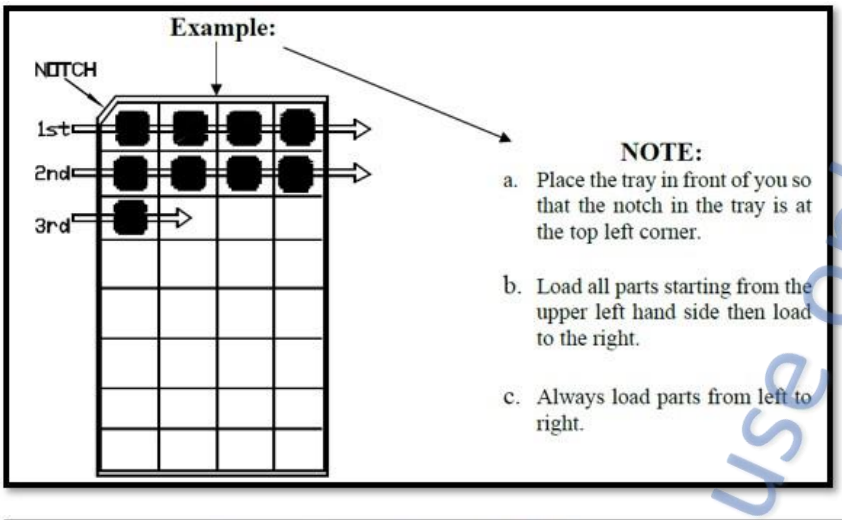

Illustration 1: Primary Packing Method – Bubble Bags



Fig 5.5.12.1
Fold the top of the bag so that it looks like the one shown above.

Fig 5.5.12.2
Insert MBB into Bubble bag as shown. Make sure to keep the label at the open end of the bag.



Fig 5.5.12.3
Fold over top of bubble bag and insert into internal tray

Illustration 2: Secondary Packing Method – Bubble Wrap

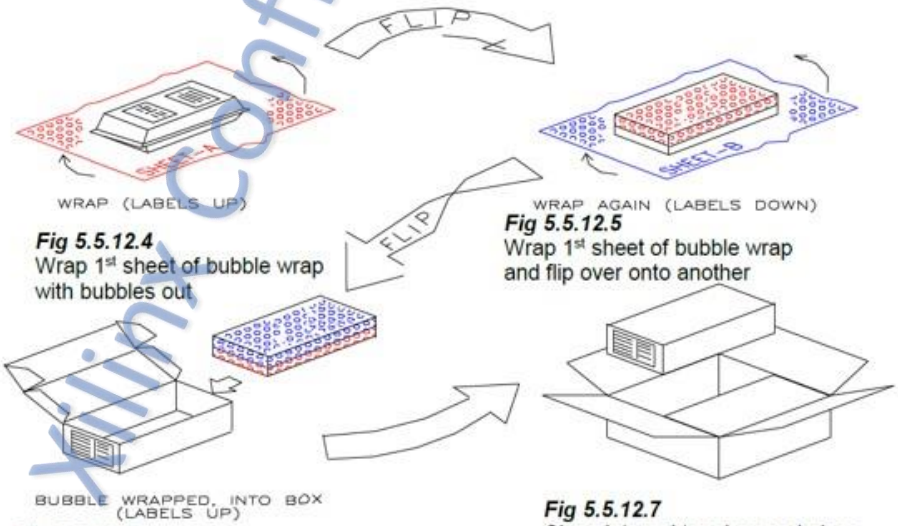

Fig 5.5.12.4
Wrap 1st sheet of bubble wrap with bubbles out

Fig 5.5.12.5
Wrap 1st sheet of bubble wrap and flip over onto another

Fig 5.5.12.6
Insert the MBB into the box

Fig 5.5.12.7
Close internal tray box and place into outer box for shipping

Xilinx Confidential for DNA use only