LCD Module Inspection Specification

MODEL NO.: FC310500DSSWNG01

2AAD617003T(T0203)

Customer :

APPROVED BY

設計驗證
工程課
2023.11.01
發行
鈺鐘科技開發股份有限公司

SIGNATURE **DATE**

QC Approved By	Prepared By
Pretty	杜元元
Issued Date	Revision
2023.11.1	0

2. RECORD OF REVISION

Rev	Date	Item	Page	Comment	
0	1/Nov/23"	3	6	New Release	

3. Inspection condition

3.1 Inspection conditions

3.1.1 Inspection Distance: 50 ± 5 cm

3.1.2 View Angle:

Inspection Angle of up, down, left and right: 10°

3.1.3 Appearance inspection time: ≦15 second

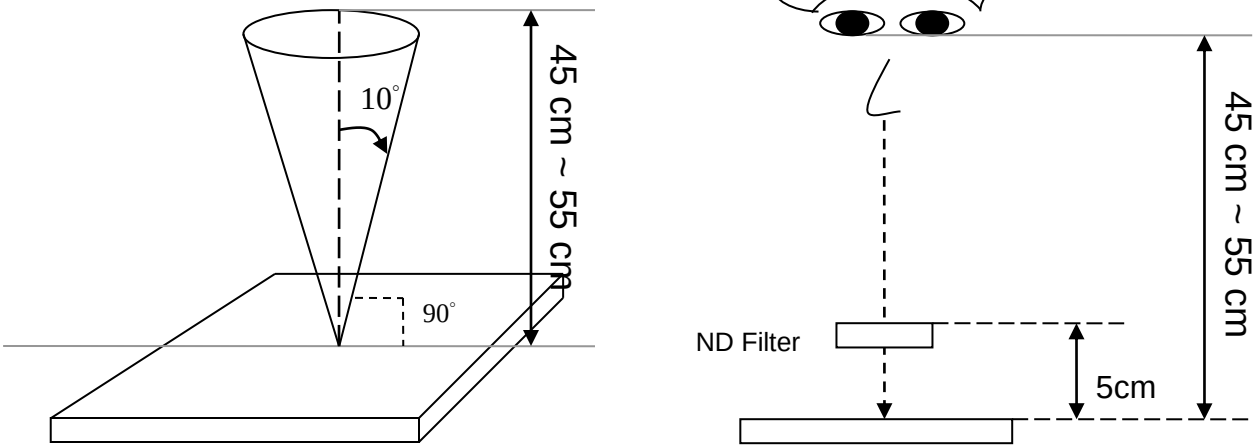

3.2 Environment conditions:

Ambient Temperature:		25±5℃
Ambient Humidity:		65±5%
Ambient Illumination	Cosmetic Inspection	800 ~ 1000lux
	Functional Inspection	300 ~ 500lux

3.3 Inspection Parameters

3.3.1 Appearance & Display inspection （D: diameter, L: length; W: width, n：number）

Items		Acceptable count	
Bright dot	Random	N ≦ 10	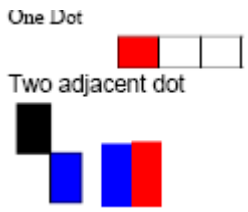
	2 dots adjacent	N ≦ 3	
	3 dots adjacent	N ≦ 0	
Dark dot	Random	N ≦ 15	
	2 dots adjacent	N ≦ 5	
	3 dots adjacent	N ≦ 0	
Total bright and dark dot		N ≦ 20	
Distance	Minimum Distance Between dark and bright dot	⩾10mm	
Display failure (V-line/H-line/Cross line etc.)		Not allowable	
Mura/ Waving /Hot spot	2% ND filter in 50% gray Not visible through		

Item	SPEC (unit: mm)	Acceptable count	Description
Foreign Black/White/Bright Spot (Display & Appearance)	D≤0.3	Ignore	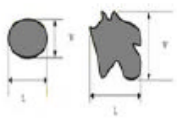 D= (L + W) / 2
	0.3 < D≤0.8	N≤5	
	D > 0.8	N≤0	
Foreign Black/White/Bright Line (Display & Appearance)	W≤0.08	Ignore	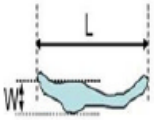 L : Long W : Width
	0.08<W≦ 0.1 and L≤10	N≦ 4	
	W>0.1 or L>10	N≦ 0	
Polarizer Dent/Air Bubble	D≤0.3	Ignore	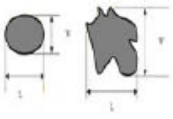 D= (L + W) / 2
	0.3 < D≤0.8	N≤5	
	D > 0.8	N≤0	
Polarizer Scratches	W≤0.08	Ignore	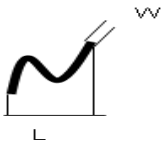
	0.08<W≦ 0.1 and L≤20	N≦ 4	
	W>0.1 or L>20	N≦ 0	

Backlight	Scratch	The scratch which may causes a problem in practical use is not permitted.
	Break-off	Breaking off is not permitted.
	Crack	The crack is not permitted.
Metal frame (Bezel)	Scratch	*Noticeable scratch and exfoliation coating are not permitted. *The oxidized metal is not permitted.
	Incomplete assembly is not permitted	
CCFL cable		Cable not continuous、Break-off 、Connector Burn-off /Break-off
Screw		Parts mounting, incomplete assembly, deformation, oxidized, crooked or rusty is not permitted.
Stain on Polarizer		The stain, which can't be wiped off, is not permitted.
Tape/Label		Incorrect position, missed label is not permitted.
Connector		Assembly NG or Function fail caused by deformation is not permitted
Protective film defective		Will not make an effect on assembly production-----OK
Outline size		Spec. out is not permitted.

3.3.2 Inspection Specification for Cover & bonded parts:（D: diameter, L: length; W: width, n：number X:width,Y: length，Z: height, T:glass thickness）

Item	SPEC (unit: mm)	Acceptable count
Foreign material of dot type defect (including printing impurity)	D≦ 0.3	Ignore
	0.3 < D≦ 0.5	N≦ 5
	0.5 < D≦ 0.8	N≦ 3
	D > 0.8	N≦ 0
Foreign material of line type defect	W≦ 0.08	Ignore
	0.08<W≦ 0.1 and L≦ 20	N≦ 4
	W>0.1 or L>20	N≦ 0
Scratch	W≦ 0.08	Ignore
	0.08<W≦ 0.1 and L≦ 30	N≦ 4
	W>0.1， L > 30	N≦ 0
printing zone–Pervious to light	D≦ 0.2	Ignore
	0.2＜D≦0.5，patching allow ,thickness≦ 0.3mm	N≦ 8
	0.5 < D≦ 1.0， patching allow ,thickness≦ 0.3mm	N≦ 5
	D > 1.0	N≦ 0
Saw tooth	D≦ 0.25	Ignore
Edge Chipping	X≤2， Y≤2， Z≤1/2T	Ignore
	X > 2， Y > 2， Z > 1/2T	N≦ 0
logo printing with foreign material/light-leaked	D≦ 0.2	N≤4
Crack	Not allowable	
Color aberration	As for color aberration, please refer to limit sample	
Dirt	The dirt should be wiped off.	
bubble	Not allowable	
RTV overflowed	W≤1mm Not counted	

Note:1. The above does not involve the project, refer to the Limit Sample to determine.

Note:2. Defect which is on the Black Matrix (outside of Active Area) are not considered as a defect. Non-visible appearance defect after assembly is not counted.

Note:3. A Bright Dot is a lit Dot visible through 5% ND filter under all black background If a lit can not be seen through 5% ND filter, it is not counted as a bright dot The Partial Bright Dot size is smaller than 1 Full Bright Dot.

Note:4. The external inspection should be conducted at the distance 35± 5cm between the eyes of inspector and the panel

Note:5. The distance among all defects should be ≥10mm

3.4 Sampling Condition

Unless otherwise agree in written, the sampling inspection shall be applied to the incoming inspection of customer.
Lot size: Quantity of shipment lot per model.
Sampling type: normal inspection, single sampling
Sampling table: ISO 2859
Inspection level: Level II

Class of defects	**Definition**		
	Major	AQL 0.65	It is a defect that is likely to result in failure or to reduce materially the usability of the product for the intended function.
	Minor	AQL 1.5	It is a defect that will not result in functioning problem with deviation classified.