| | | |
|---|---|---|
| ☑ | Taiwan Plant | NO. 31,Ting-Ping Rd., Shui-Fong Ind. Park, Shui-Fong , District , New Taipei City 224012 Taiwan |
| | | TEL: 886-2-2406-2779 FAX: 886-2-2496-0769 E-Mail : sales-tw @mercury-crystal.com |
| ☐ | China Office | Room 401 Dongan Building Chunxu Road 258, Development Zone Kunshan City, Jiangsu Province, China |
| | | TEL: 86-512-5763-8100 FAX: 86-512-5763-8103 E-Mail : sales-cn @mercury-crystal.com |
| ☐ | U.S.A. Plant | Unit 603, 9804 Crescent Center Dr., Rancho Cucamonga,California 91730-5782 USA |
| | | TEL: 1-909-466-0427 FAX: 1-909-466-0762 E-Mail : sales-us @mercury-crystal.com |



| Specification Sheet For Approval | Series No: SC20231129k01 |
|---|---|
| | Date : 12/1/2023 |

☑ Quartz Crystal ☐ Quartz Crystal Oscillator ☐ OCXO ☐ VCXO
☐ M.C.F ☐ TCXO / VCTCXO ☐ Others _ _ _ _ _ _ _ _ _ _ _ _ _ _ _

| | |
|---|---|
| Customer | 訢寶企業股份有限公司 |
| Customer P/N | |
| Product Type | Crystal --- 49/US ( Dip --- 10.7 * 4.3 * 3.5 mm ) |
| Nominal Frequency | 25.000 MHz |
| Mercury P/N | FXHUSG-25.000-20-10/20/-40+85 |

| Customer | Vender |
|---|---|
| Approved By | Confirmed By |
| Customer Engineer : | Mercury Engineer : Peter Huang |
| Date : | Date : 12/1/2023 |
| Customer QC : | Mercury QC : Andy Tsai |
| Date : | Date : 12/1/2023 |

Specification Sheet Contents :

☑ Specifications Sheet
☑ Package Dimension
☑ Crystal / Oscillator Introduction
☑ MSL level1
☐ FQC Test Report
☐ Temperature Stability Test Report
☑ Test Data Of Reliability
☑ Lead Free Approved

Mercury Electronic Industrial Co., Ltd.

*Steve*

Authorized Signature

## Electrical Specification

Series No. : SC20231129k01
Date : 12/1/2023

| | Parameters | SYM. | Electrical Spec. | | | | Notes |
|---|---|---|---|---|---|---|---|
| | | | Min. | Typical | Max. | Unit | |
| 1 | Mercury Part No. | | | - | | | FXHUSG-25.000-20-10/20/-40+85 |
| 2 | Nominal Frequency | FL | | 25.000000 | | MHz | |
| 3 | Holder Type | | | - | | | 49/US ( Dip --- 10.7 * 4.3 * 3.5 mm ) |
| 4 | Crystal Cut | | | - | | | AT-Cut |
| 5 | Mode of Oscillation | | | - | | | Fundamental Mode |
| 6 | Frequency Tolerance | F_use | -10 | ~ | 10 | ppm | at 25°C ± 3°C |
| 7 | Frequency Stability | F_tem | -20 | ~ | 20 | ppm | Refer at 25°C |
| 8 | Spurious Attenuation | SPDB | | | -4 | dB | -2000ppm ~ +10000 ppm , 25 points |
| 9 | Equivalent Series Resistance | ESR | | | 30 | Ω | |
| 10 | Shunt Capacitance | C0 | | | 5.0 | pF | |
| 11 | Load Capacitance | CL | | 20 | | pF | |
| 12 | Drive Level | DL | | | 500 | uW | |
| 13 | MaxR-MinR | DLD2 | | | 10 | Ω | 0.1 uw ~ 100 uW , 10 points |
| 14 | MaxFR-MinFR | FDLD | | | 10 | ppm | 0.1 uw ~ 100 uW , 10 points |
| 15 | Operating Temperature | T_opr | -40 | ~ | 85 | °C | |
| 16 | Storage Temperature | T_stg | -40 | ~ | 85 | °C | |
| 17 | Aging | F_aging | -3 | | 3 | ppm | First year |

Package Dimension ( Unit : mm )

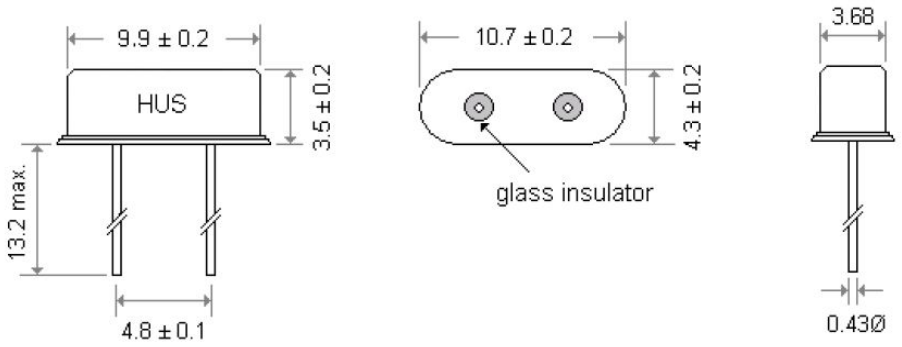

## Marking

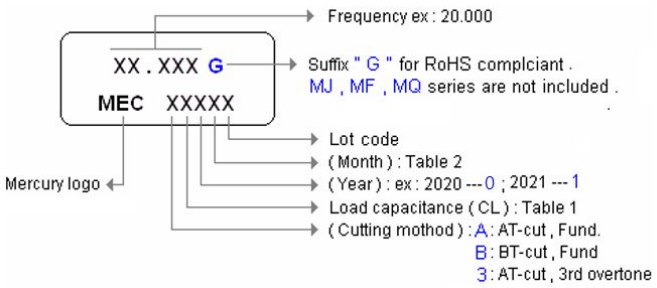


Table 1

| CL | <10 | 10 | 11 | 12 | 13 | 14 | 15 | 16 | 17 | 18 | 19 | 20 |
|---|---|---|---|---|---|---|---|---|---|---|---|---|
| Code | A | B | C | D | E | F | G | H | I | J | K | L |

| CL | 21 | 22 | 23 | 24 | 25 | 26 | 27 | 28 | 29 | 30 | 31 | 32 |
|---|---|---|---|---|---|---|---|---|---|---|---|---|
| Code | M | N | O | P | Q | R | S | T | U | V | W | X |

| CL | 33 | 34 | >34 | Series |
|---|---|---|---|---|
| Code | Y | Z | a | b |

Table 2

| Month | Jan. | Feb. | Mar. | Apr. | May | Jun. | Jul. | Aug. | Sep. | Oct. | Nov. | Dec. |
|---|---|---|---|---|---|---|---|---|---|---|---|---|
| Code | A | B | C | D | E | F | G | H | I | J | K | L |

## Equivalent Circuit of crystal

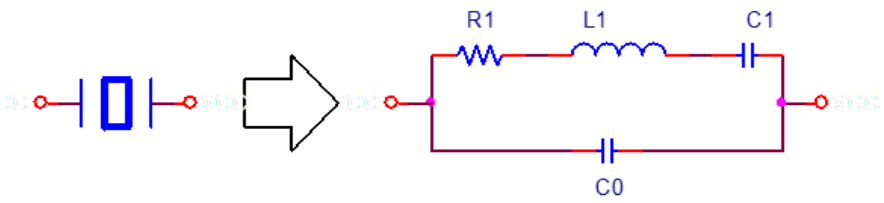


## Oscillation circuit

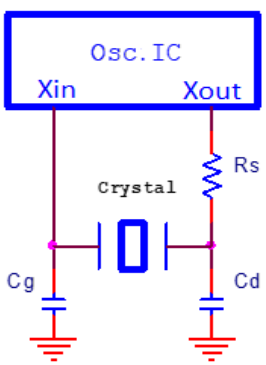

# Environmental Specification

| | | | |
|---|---|---|---|
| 1.Temperature Test | | | |
| *Temperature Cycling Test | | | |
| Conditions: | Steps of cycle | (1)Extreme Cold Temp: -55℃(+0/-10℃)/ 15±3min | |
| | | (2)Extreme Hot Temp: +125℃(+15/-0℃)/ 15±3min | |
| | Number of | 10 cycles min | |
| Results: | Frequency and wave form of tested products must remain within specifications. | | |
| *Thermal Shock Test | | | |
| Conditions: | Temperature -55(+0/-10)℃ to 125(+10/-0)℃ | | Duration of cycle 15 times(min) |
| | ExTotal Transfer Time < 10 seconds | | |
| | Total Dwell time > 2minutes | | |
| | Specified Temp reached in < 5 minutes | | |
| Results: | Frequency and wave form of tested products must remain within specifications. | | |
| *Low Temperature Test | | | |
| Conditions: | Temperature -50℃±5℃ | | Duration of test 168hours(min) |
| Results: | Frequency and wave form of tested products must remain within specifications. | | |

| | | |
|---|---|---|
| 2.Accelerated Life Test(Aging Biased) | | |
| Conditions: | Temperature +85°C±5°C | Duration of test 168hours±6hours |
| Results: | DC Power supply | |
| | Frequency and wave form of tested products must remain within specifications. | |

| | | |
|---|---|---|
| 3.Salt Spray Test | | |
| Conditions | Temperature 35°C | Duration of test 24 hours |
| | NaCl 5% | |
| Results: | There Should be no rust on surface of products | |

| | | | |
|---|---|---|---|
| 4.Humidity Test | | | |
| Conditions: | Temperature: 85℃±5℃ | Relative humidity:85%±5℃ | Duration of test:168 hours(min) |
| Results: | Frequency and wave form of tested products must remain within specifications. | | |

| Mechanical Specification Sheet | | |
|---|---|---|
| 1.Vibration Test | | |
| Conditions: | Freq. range: 20~2000Hz Peak to Peak | |
| | amplitude:1.52mm Peak acceleration:20G(98m/s2) | |
| | 3direction(X,Y,Z),each 20min, 4cycles | |
| Results: | Frequency and wave form of tested products must remain within specifications. | |
| 2.Drop Test | | |
| Conditions: | Method of drop | Free drop |
| | Dropping floor | Hard wood board |
| | Height | 75 cm +1/-0cm |
| | Number of drops | 3 times |
| Results: | Frequency and wave form of tested products must remain within specifications. | |

Notice :

1 Mercury requires the copy of this specification returned with approved.
2 Any change to these specification have to be agreed by both parties and new revision of the specification will be issued .