SPECIFICATION FOR APPROVAL

Customer : DIVA

Customer P/N: 3ZAD24V1930(Z0527)

Part No : _____ **Rev :** _____

Description : AC-DC Power Supply

Delta Model No : MEU-650A24T AAA

Document Rev : 00

Sample Issue Date : Nov. 28, 2023

DELTA ELECTRONICS, INC.

16, Tung Yuan Road
Chungli Industrial Zone.
Taoyuan Hsien 320, Taiwan, R.O.C
Internet : http:/www.deltaww.com
TEL:886-3-4526107 FAX:886-3-4343617

TABLE OF CONTENTS

1. Revision History
2. Electrical Specification
3. Physical Dimension
4. Label Drawing
5. Packing
6. Safety License

Please send one copy of this specification back after you signed approval for production pre-arrangement.

Customer Sign : _____ **Date :** _____

設計驗證
工程課
2023.12.11

Approved By : _____ **Date :** _____

發行
益業科技開發股份有限公司

Engineer By: JEREMY.JL.LI **M.Engineer By:** FULIN.XIE **Approved By:** SHIYONG.NI

1. Revision History

DELTA P/N	MEU-650A24T AAA	SHEET 1 OF 1
CONTENT	Revision History	DATE Nov. 28, 2023

1.Revision History

REV.	DESCRIPTION	ENGINEER	DATE
- 00	ISSUE	JEREMY.JL.LI	11/28/2023

2. Electrical Specification

技术参数表

医疗/ 工业用 AC-DC 电源供应器

450 W 自然对流 / 650 W 强制通风冷却 MEU-650A□T



亮点及特色

- 自然对流 / 强制通风冷却
- 4" x 6" x 1.575" 尺寸，可高达 650 Watt
- 电源密度高达 17.2 W/inch^3
- 全功率运行温度可高达 50°C
- 效率极高，可达 96%
- 平均故障间隔时间（MTBF）高达 50 万小时
- 2 x MOPP
- 适用于 BF 型患者可接触医用系统设备
- 5 V / 2 A 备用电源
- 12 V / 0.6 A 直流风扇电源 (24 V & 48 V 机种)
- 并联均流功能
- 保形涂层
- 涂布三防漆
- 传导与辐射 EMI Class B 标准
- 抗干扰度达到 IEC60601-1-2 4th Edition 标准
- 遥控开关、Power Good 信号
- 输出电压调整

安规认证

- IEC60601-1 2nd edition
- IEC60601-1 3rd edition + A1 CB 报告
- TUV EN60601-1:2006/A11/A12
- CAN/CSA-C22.2 NO.60601-1 + ANSI/AAMI
- ES 60601-1
- IEC60950-1 CB 报告
- IEC62368-1 CB 报告
- TUV EN62368-1
- UL62368-1 and CAN/CSA C22.2
- No. 62368-1
- IEC60335-1 CB 报告 (12 V & 24 V 机种)
- TUV EN60335-1 (12 V & 24 V 机种)
- IEC61558-1 CB 报告 (12 V & 24 V 机种)
- TUV EN61558-1/-2-16（12 V & 24 V 机种)

输入				
输入电压		90-264 Vac		
输入频率		47-63 Hz		
输入电流		< 8 A		
浪涌电流		< 40 A		
功率因数		> 0.95 @ 额定负载		
效率		可高达 96%		
Patient Leakage Current		< 100 uA normal, < 500 uA SFC		
Earth Leakage Current		< 300 uA normal, < 1 mA SFC		
输出				
输出电压		12 V	24 V	48 V
输出电流 @ 自然对流		0-33.4 A	0-18.75 A	0-9.375 A
输出功率（最大值） @ 自然对流		400 W	450 W	450 W
输出电流 @ 强制通风	@ 100 Vac	0-50 A	0-25 A	0-12.5 A
	@ 230 Vac	0-50 A	0-27.1 A	0-13.6 A
输出功率（最大值）@ 强制通风	@ 100 Vac	600 W 最大值		
	@ 230 Vac	600 W 最大值	650 W 最大值	650 W 最大值
纹波与噪音（最大值）		1% 额定电压 pk-pk (400 W for 12 V, 450 W for 24 V & 48 V) 1.5% 额定电压 pk-pk (600 W for 12 V, 650 W for 24 V & 48 V)		
备用电源		5 V / 2 A（无最小负载要求）		
运行环境				
平均故障间隔时间（MTBF）		500 KHrs		
运行温度		-20°C ~70°C [1)]		
运行海拔高度		5000 m 或 54 kPa		

1) 运行温度高于 50°C 时功率降额详见功率降额曲线

除非另行说明，所有参数都基于 25°C 环境温度。

医疗/ 工业用 AC-DC 电源供应器

450 W 自然对流 / 650 W 强制通风冷却 MEU-650A□T

型号数据 (5V/2A 备用可选)

机种型号	输入电压	输出电压	输出电流 @ 自然对流	输出电流 @ 强制通风
MEU-650A12T	110-132 Vac	12 Vdc	0-33.4 A	0-50.0 A
	180-264 Vac			0-50.0 A
MEU-650A24T	90-132 Vac	24 Vdc	0-18.75 A	0-25.0 A
	180-264 Vac			0-27.1 A
MEU-650A48T	90-132 Vac	48 Vdc	0-9.38 A	0-12.5 A
	180-264 Vac			0-13.6 A

型号编码

MEU	-	650	A	□	T	XXX
ME: 台达医用电源供应器 U: U 型外壳		产品最大功率 650: 650W	产品家族代码	输出电压 12:12V 24:24V 48:48V	输入端子接口型式 T：端子台	CC code 详见下表

CC code

CC code	外观
AAA	台达标准

医疗/ 工业用 AC-DC 电源供应器

450 W 自然对流 / 650 W 强制通风冷却 MEU-650A□T

规格

额定输入 / 特性

机种型号	MEU-650A12T	MEU-650A24T	MEU-650A48T
额定输入电压	100-240 Vac		
输入电压范围	90-264 Vac		
额定输入频率	50-60 Hz		
输入频率范围	47-63 Hz		
输入电流 (最大值)	8.0 A		
输入浪涌电压 (最大值)	300 Vac 持续 100 ms		
满载效率	92.0% @ 115 Vac 93.0% @ 230 Vac 参见图.1	94.5% @ 115 Vac 95.5% @ 230 Vac 参见图.2	95.0% @ 115 Vac 96.0% @ 230 Vac 参见图.3
输入浪涌电流 (最大值)	40 A @ 264 Vac, 冷启动		
输入-PE (主地线) 漏电流 (最大值)	0.3 mA @ NC, 1 mA @ SFC [1]		
输出-PE (主地线) 漏电流 (BF 型应用、最大值)	0.1 mA @ NC, 0.5 mA @ SFC [1]		
功率因数 (最小值)	0.95 @ 115 Vac / 50 Hz, 230 Vac / 50 Hz, 满载		

1) NC: 正常状态，SFC: 单一故障状态

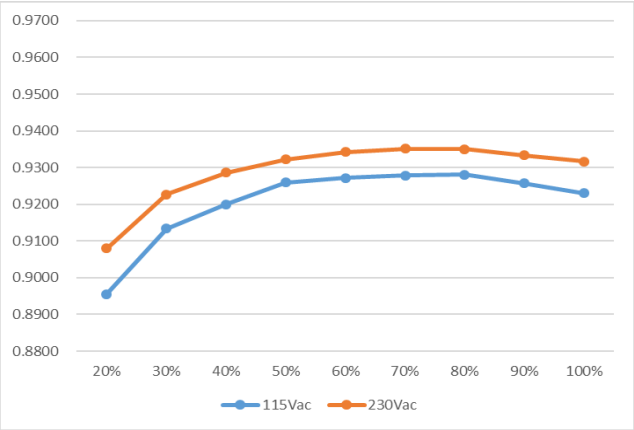

图 1. MEU-650A12T 典型效率曲线

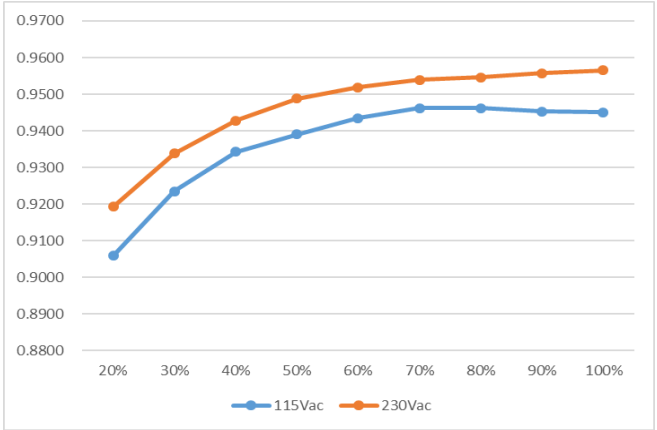

图 2. MEU-650A24T 典型效率曲线

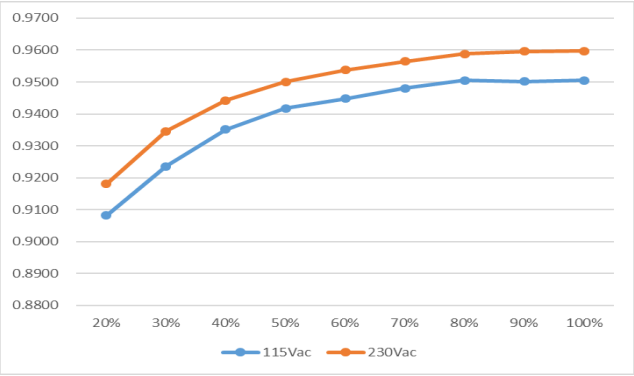

图 3. MEU-650A48T 典型效率曲线

医疗/ 工业用 AC-DC 电源供应器

450 W 自然对流 / 650 W 强制通风冷却 MEU-650A□T

额定输出 / 特性

机种型号	MEU-650A12T	MEU-650A24T	MEU-650A48T
电压精度	± 3%		
输出功率（最大值） @ 自然对流	400 W	450 W	450 W
输出功率（最大值） @ 强制通风	600 W with 11.8 CFM	650 W with 6.9 CFM	650 W with 6.9 CFM
线电压调整率 (最大值)	1%		
负载调整率 (最大值)	2%		
纹波与噪声 (典型值)	1% pk-pk 额定输出电压 @ 额定负载 (400 W) 1.5% pk-pk 额定输出电压 @ 额定负载 (600 W)	1.0% pk-pk 额定输出电压 @ 额定负载 (450 W) 1.5% pk-pk 额定输出电压 @ 额定负载 (650 W)	
电压微调范围	12-14 V	21.6-26.4 V	48-54 V
动态响应（过冲及下冲输出电压）	± 5% @ 0-50% & 50-100% 负载变化		
开机时间（最大值）	2000 ms，AC 开启		
保持时间（最小值）	20 ms @ 额定输入电压范围, 400 W 负载 (MEU-650A12T), 450W 负载 (MEU-650A24/48T)		
电容性负载（最大值）	6000 uF		
上升时间（最大值）	<50 ms		
遥感功能	通过外接电线连接至负载可达最高 500 mV 电压补偿。 短路及反接保护。		

额定输出 / 特性 – 备用输出

备用电源输出额定电压	5 V
备用电源输出额定电流	2 A 备注：1 A @ 自然对流冷却；2 A @ 强制通风冷却
备用电源输出电压精度	± 3%
备用电源输出电压纹波与噪声	100 mV 最大值
风扇电源输出额定电压	12 V (仅限 MEU-650A24 & MEU-650A48 机种)
风扇电源输出额定电流	0.6 A
风扇电源输出电压精度	± 5%
风扇电源输出电压纹波与噪声	120 mV 最大值

纹波与噪声测试接线图

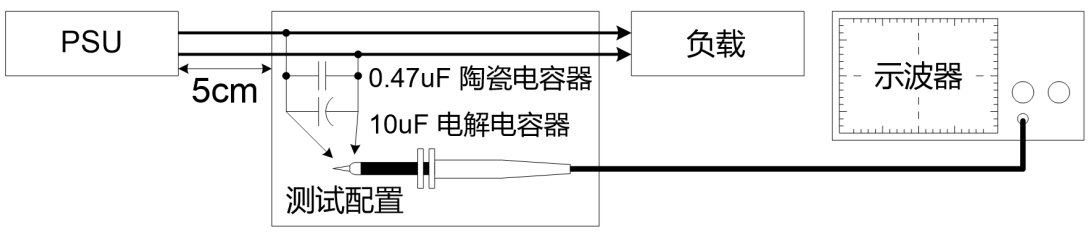

图 5. 纹波与噪声测试图

医疗/ 工业用 AC-DC 电源供应器

450 W 自然对流 / 650 W 强制通风冷却 MEU-650A□T

机构参数

外观	U 型
尺寸 (L x W x H)	152.4 x 101.6 x 40 mm（6 x 4 x 1.575 英寸）
重量	0.80 kg

运行环境

环境温度	运行温度	-20°C 至 +70°C.
	储存温度	-40°C 至 +85°C
功率降额 注：见下图功率降额曲线	自然对流	线性功率降额自 50°C 时 100% 负载至 70°C 时 50% 负载（MEU-650A12T） 线性功率降额自 50°C 时 100% 负载至 70°C 时 53.3% 负载（MEU-650A24 & 48T）
	强制通风	线性功率降额自 50°C 时 100% 负载至 70°C 时 50% 负载
运行湿度		5-95% RH （无冷凝）
运行海拔高度		可高达 5,000 米（相当于 16,400 英尺或 106-54 kPa）
非运行海拔高度		可高达 5,575 米（相当于 18,290 英尺或 106-50 kPa）
冲击测试（非运行）		50 G, 11 ms, 每个方向各 3 次
振动测试（运行中）		5-500 Hz, 2 Grms, 三轴各测试 15 分钟

功率降额曲线（自然对流）

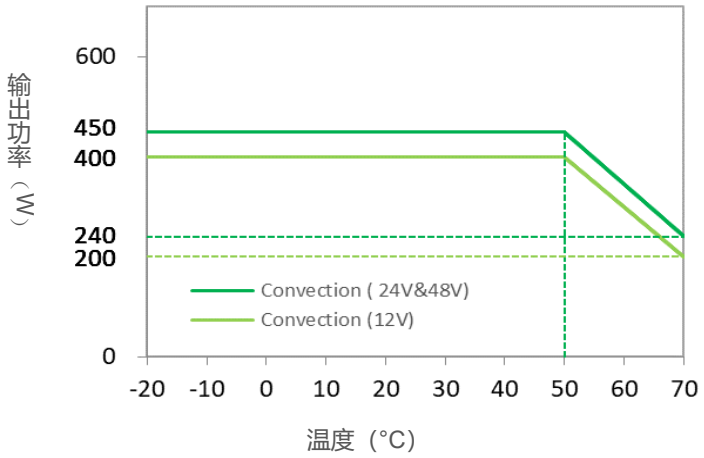

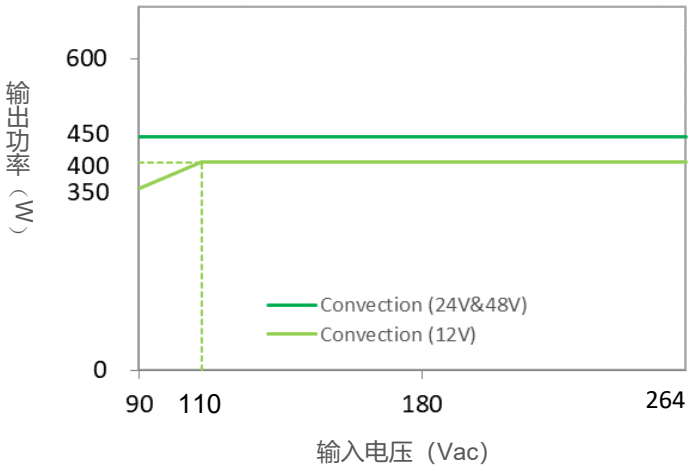

医疗/ 工业用 AC-DC 电源供应器

450 W 自然对流 / 650 W 强制通风冷却 MEU-650A□T

功率降额曲线（强制通风冷却）

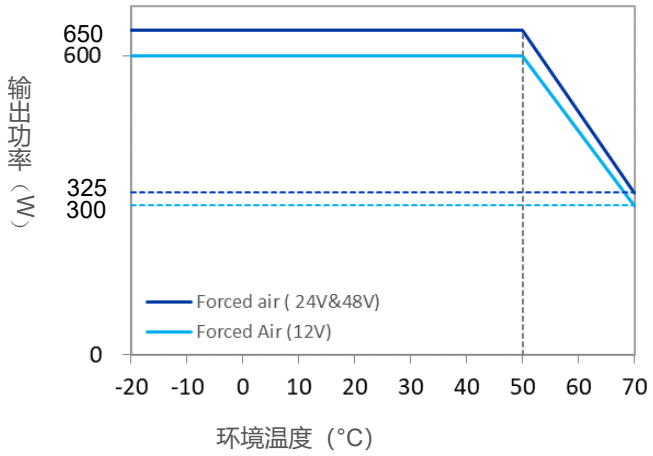

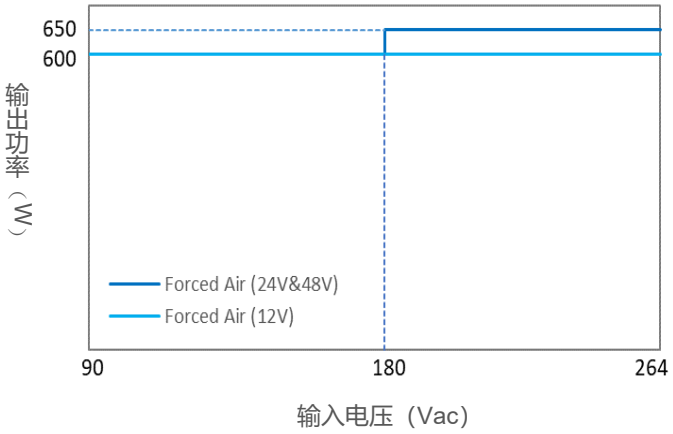

强制风冷接线图，配备风扇 P/N: DELTA AFB0512HHD

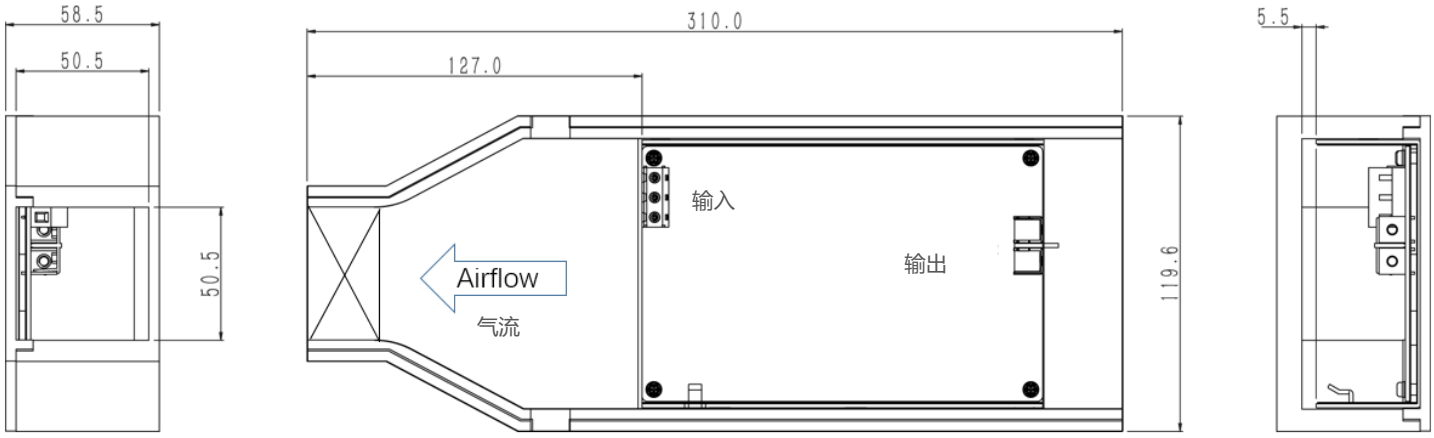

备注 1（适用 MEU-650A24T AAA 及 MEU-650A48T AAA 机种）：

1. 可改动风扇源及腔体尺寸以达到 140 LFM 风速
2. 气流：6.9 CFM （仅供参考。风速应达到 140 LFM）
3. 使用风扇电压：7.0 V（仅供参考，每台风扇的电压都应调整以达到 140 LFM 风速）
4. 单位：mm

备注 2（适用 MEU-650A12T AAA 机种）：

1. 可改动风扇源及腔体尺寸以达到 230 LFM 风速
2. 气流：11.8 CF:（仅供参考。风速应达到 230 LFM）
3. 使用风扇电压：10.5 V（仅供参考。每台风扇的电压都应调整以达到 230 LFM 风速）
4. 单位：mm

医疗/ 工业用 AC-DC 电源供应器
450 W 自然对流 / 650 W 强制通风冷却 MEU-650A□T

保护功能（同时保护主输出与 5 V 备用电源，除非另行注明）

过压（最大值）	主输出额定正常电压之 140%，锁定模式 备用电源输出额定电压之 125%，锁定模式
过载 / 过流（最大值）	> 750 W， 最大持续 750 ms 进入保护模式 备用电源最大值 3.2 A，打嗝模式（非锁定，自动恢复）
过温	主输出锁定模式
短路	主输出及备用电源输出打嗝模式（非锁定，自动恢复）

可靠性数据

平均故障间隔时间（MTBF，最小值），115 Vac，35 °C， 400 W (12 V)，450 W (24 V & 48 V)	500,000 小时，基于 Telecordia SR-332 标准
运行寿命（最小值），115 Vac，25°C，400 W (12 V)， 450 W (24 V & 48 V)	26,280 小时

安规标准 / 认证

医用安规		IEC60601-1 2nd and 3rd+A1 edition CB 报告 TUV EN60601-1:2006 CAN/CSA-C22.2 NO.60601-1 + ANSI/AAMI ES 60601-1
信息技术设备安规		IEC60950-1 CB 报告 IEC62368-1 CB 报告 TUV EN62368-1 UL62368-1 and CAN/CSA C22.2 No. 62368-1
家用（MEU-650A12 & 24T）		IEC 60335-1 CB 报告 TUV EN 60335-1 IEC 61558-1 CB 报告
CE		符合 EN 60601-1: 2006 + A11: 2011 + A1: 2013 + A12: 2014 & EN 60601-1-2: 2015
UKCA		符合电磁兼容性规定 Regulations 2016 及医疗设备规定 Medical Devices Regulations 2002、Regulations 2016 (UK MDR 2002)
绝缘强度	输入至输出（2 X MOPP） 输入至接地（1 X MOPP） 输出至接地（1 X MOPP）	4000 Vac 1500 Vac 1500 Vac (BF 型应用额定值)

医疗/ 工业用 AC-DC 电源供应器

450 W 自然对流 / 650 W 强制通风冷却 MEU-650A□T

电磁兼容性

EMC / 辐射		EN 55011 / EN 55032, FCC Title 47: Class B
谐波输入电流	IEC 61000-3-2	达到 Class D 要求
抗扰度		
电压波动与闪烁	IEC 61000-3-3	
静电	IEC 61000-4-2	Level 4 Criteria A[1)5)] 空气放电: 15 kV 接触放电: 8 kV
电磁射频场	IEC 61000-4-3	Criteria A[1)] 80 MHz-2700 MHz, 10 V/m AM modulation Level 2 Criteria A[1)5)] 385 MHz-5785 MHz, 28 V/m Pulse mode and other modulation
快速瞬变脉冲	IEC 61000-4-4	Level 3 Criteria A[1)] :2 kV
雷击浪涌	IEC 61000-4-5	Level 3 Criteria A[1)5)] 共模 [3)]: 2 kV 差模 [4)]: 1 kV
传导干扰	IEC 61000-4-6	Level 2 Criteria A[1)5)] 150 kHz-80 MHz, 3 Vrms, 6 Vrms at ISM bands and Amateur radio bands
工频磁场	IEC 61000-4-8	Criteria A[1)5)] 磁场强度 30 A/m
电压突降	IEC 61000-4-11	30% 10 ms Criteria A[1)] 60% 100 ms Criteria B[2)] 100% 5000 ms Criteria B[2)]
电压突降 [5)]	IEC 60601-1-2	Criteria A[1)] @ 550 W 0% U_T, 0.5 cycle (10 ms) (0°, 45°, 90°, 135°, 180°, 225°, 270°, 315°, 360°) Criteria B[2)], 380 W 或以下负载可达 Criteria A 标准 0% U_T, 1 cycle (20 ms), 0° Criteria B[2)] 70% U_T, 25 cycle (500 ms), 0° Criteria B[2)] 0% U_T, 250 cycle (5000 ms), 0°

1) Criteria A: 规格范围内常规性能
2) Criteria B: 输出超出稳压率或测试时关机，测试后自动恢复至正常运行。
3) 非对称：共模（线对地）
4) 对称：差模（线对线）
5) 符合 IEC60601-1-2 4th Edition 标准

医疗/ 工业用 AC-DC 电源供应器

450 W 自然对流 / 650 W 强制通风冷却 MEU-650A□T

尺寸

L x W x H: 152.4 x 101.6 x 40 mm (6.0 x 4.0 x 1.575 英寸)

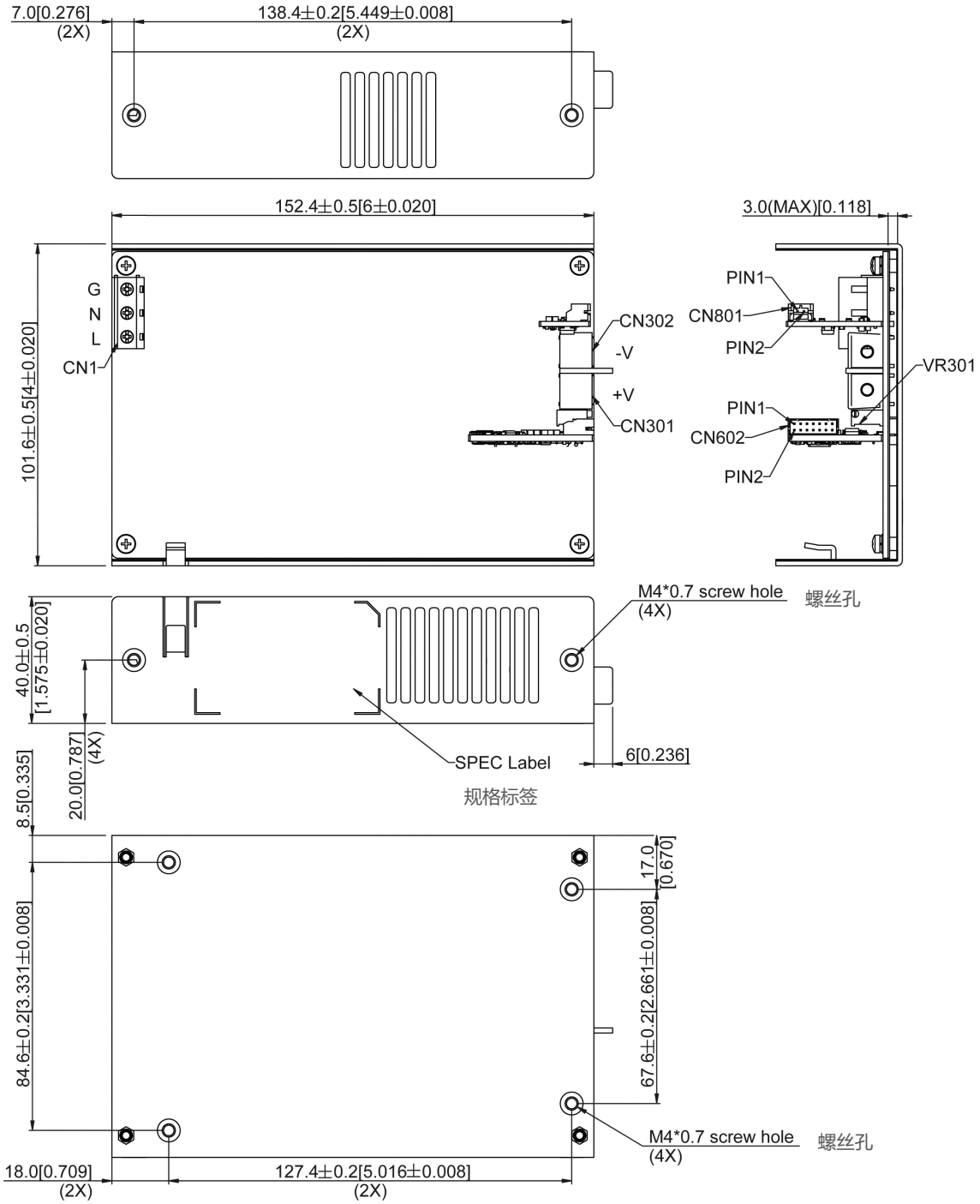

说明:

1. 底坐 M4 螺丝孔，最大深度 3.0 mm (0.118 英寸)，从外面开始旋入，最大扭力 4.5 kgf.cm (3.91 lbf.in)。
2. 侧面 M4 螺丝孔，最大深度 3.0 mm (0.118 英寸)，从外面开始旋入，最大扭力 4.5 kgf.cm (3.91 lbf.in)。
3. CN301 / CN302 安装使用 M4 螺丝，最大扭力 9.7 kgf.cm (8.41 inch.lbs)。
4. 所有尺寸以毫米与英寸为单位。

医疗/ 工业用 AC-DC 电源供应器

450 W 自然对流 / 650 W 强制通风冷却 MEU-650A□T

端子脚位定义

输入端子 CN1(DEGSON: DG128-7.5-03P-1Y)	
L	火线
N	零线
G	地线
输出端子	
CN301	Vo
CN302	DC RTN
CN801(JST: S2B-PH-SM4-TB) 与 JST: PHR-2 匹配 端子: SPH-002T-P0.5S（FOR MEU-650A24T AAA and MEU-650A48T AAA ONLY）	
Pin 1	DC RTN
Pin 2	12 V 用于风扇
控制端子 CN602(CviLux:CI0114P1HDY-R0-NH) 与 CviLux: CI0114SD000 匹配 端子:CI01TD21PE0	
Pin 1	Current Share
Pin 2	DC RTN
Pin 3	Remote Sense +
Pin 4	Remote Sense -
Pin 5	DC RTN
Pin 6	DC RTN
Pin 7	5V Standby Output +
Pin 8	5V Standby Output +
Pin 9	NC
Pin 10	NC
Pin 11	Power Good-
Pin 12	Power Good+
Pin 13	Remote On_Off/Inhibit +
Pin 14	Remote On_Off/Inhibit -

医疗/ 工业用 AC-DC 电源供应器
450 W 自然对流 / 650 W 强制通风冷却 MEU-650A□T

功能

开机时间

开启输入电压后，输出电压达到稳定电压值之 90% 所需时间。

上升时间

输出电压从稳定值之 10% 到 90% 所需时间。

保持时间

从 AC 输入电压中断到输出电压开始低于输出电压稳定值 90%之间的时间。

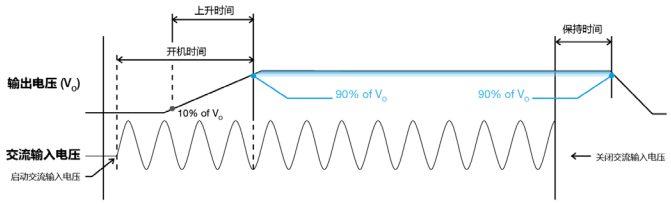

图 4 时间顺序

动态响应（主输出）

当额定电流 50-100% 动态负载时，电源输出电压保持在 ± 5% 稳压率。

■ 50 - 100% 负载

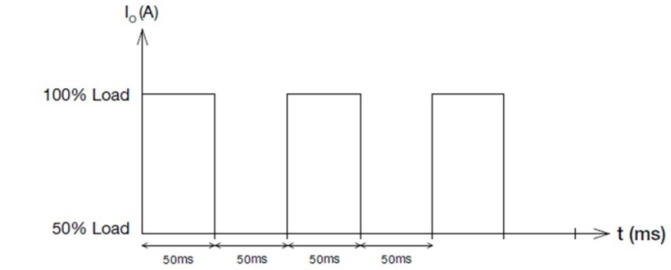

图 5 动态负载

浪涌电流

浪涌电流指输入电压瞬间开启造成的电流峰值。浪涌电流最大值发生在交流输入电压第一个半波时，此峰值在随后的交流电压周期内呈指数下降。

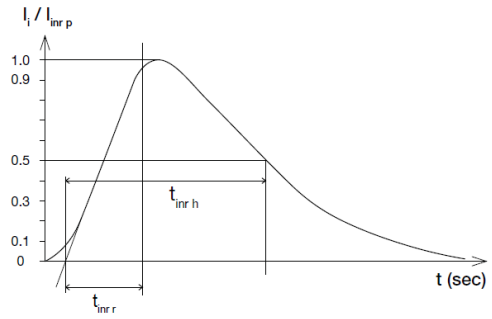

图 6 浪涌电流

过压保护

内部反馈电路出现故障时，电源过压电路即被触发。输出电压不得超出第 5 页 “保护功能” 章节中所规定的范围。触发后，电源将进入锁定状态，需解除或重置输入交流电压才能重启。

过载及过流保护

当输出功率达到 750 W 前 Vo （输出电压）开始下降。一旦电源达到最大功率限制 750 W，超过 750 ms 电源将进入 “打嗝模式” （自动恢复）。过载或过流故障一经解除，Io（输出电流）即回归正常范围。

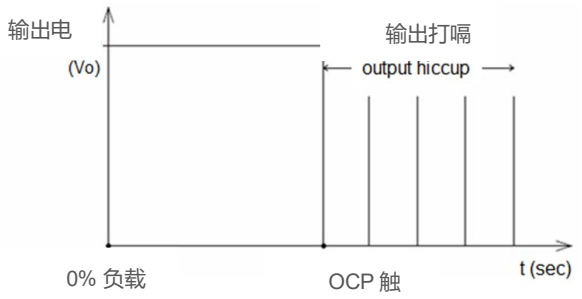

图 7. OLP/OCP 打嗝模式

另外，当输出电流（Iout）> 100% 且持续一段时间（视负载而定），过温保护 (OTP) 可能会因主要零件高温而触发。电源将随之进入锁定状态。

短路保护

OLP/OCP 功能之外还提供短路保护。发生短路时，电源将进入 “打嗝模式”，短路解除后电源即可回归正常运行。

医疗/ 工业用 AC-DC 电源供应器
450 W 自然对流 / 650 W 强制通风冷却 MEU-650A□T

过温保护

如前所述，电源具备过温保护 (OTP) 功能。如过载状态持续过长，同时输出电流低于过载触发点但 > 100% 负载，过温保护即被触发。当 100% 负载状态下运行温度过高，或环境温度超出运行温度，电源将进入 OTP。过温保护触发后，输出电压将进入锁定模式直至输入电压解除并重置，且环境温度回落至正常运行温度范围。

Power Good 信号

Power Good +/- 端口系隔离型开集极晶体管（额定值 80V/50 mA）。在 Power Good- 端口与 DC RTN 之间增加一个电阻 (建议值为 10K ohm、1/8 W)，Power Good+ 端口可连接至 5 V 备用电源电压(或其不大于晶体管额定值的电压)。视使用电压大小，电阻值必须调整，且同时要考虑到 Power Good+ 端口连接至终端产品的使用情况。接通 AC 电源后，Power Good 信号为高电平 (如下图所示)，AC 输入关闭后，Power Good 信号为低电平。当输出电压降至额定值 90% 以下，Power Good 信号会至少提前 5 ms（450 W 负载下）拉到低电平。

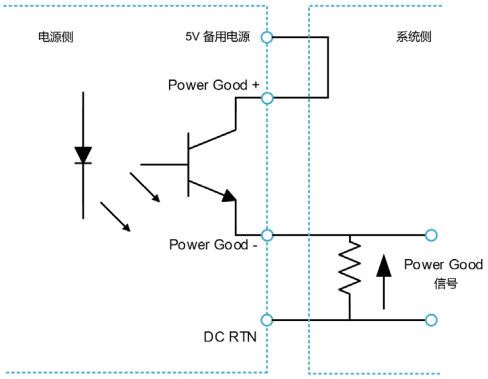

图 8 Power Good 接线图

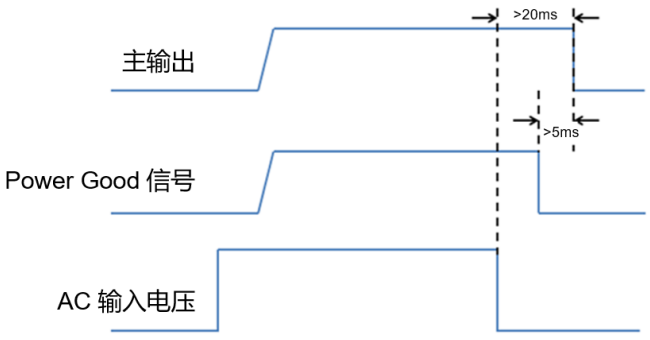

图 9 Power Good 信号时序

遥控开关 On_Off/Inhibit

通过电源内部光耦实现遥控 ON_OFF/INHIBIT 功能。这一信号只可用于开启或关闭主输出。当主输出关闭时， +5 V 备用电源会持续运行。可使用开关控制经由电源内部光耦 (建议 5 V 串联 1K ohm 电阻) 来关闭主输出。此端口信号可以浮接 (不作任何连接)，正常开启主输出。

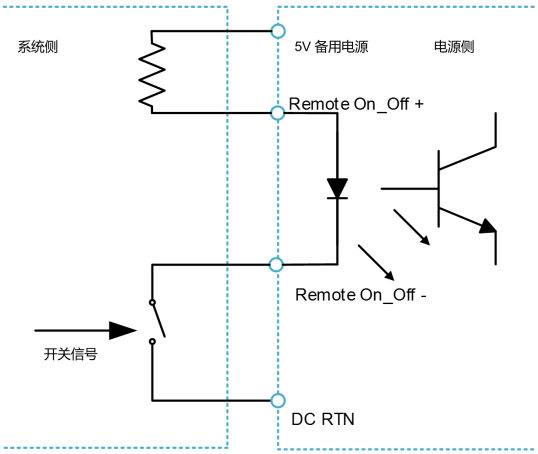

图 10 遥控 On_Off 接线图

遥感功能

遥感功能特色可用于补偿连接主输出端口与负载间的输出线所产生的电压压降。遥感两个端口经由绞线连接至负载端，与主输出线相同，遥感功能可以补偿高达 500 mV 的电压压降。即便遥感端口发生短路或极性接反，电源也不会受损。

电压调整

电源供应器为用户提供一个电位器用于调整输出电压。根据设计，能够在额定电压 ±10% 的范围内调整输出电压。当输出电压调整至低于额定值时，最大输出电流可达到额定输出值；当输出电压调整至高于额定值时，输出功率无法超出额定最大功率（最大输出电流也将随之降低）。

并联均流

电源供应器支持并联均流功能。两台主输出并联且连接 Current Share 端口即可开启此功能。为确保更佳并联均流功能，两台电源供应器并联前可使用 VR 调整输出电压以尽可能达至相同。

医疗/ 工业用 AC-DC 电源供应器
450 W 自然对流 / 650 W 强制通风冷却 MEU-650A□T

认证

台达通过 ISO 13485: 2003 及 EN ISO 13485:2012 认证，达到医疗设备用开关电源供应器及适配器之设计制造要求。

E356265

产品除通过 UL Total Certification Program (TCP) 实验室认证的 IEC60950 及 IEC60065，同时符合 TEC60601 Data Program (CDTP) 要求。

声明

台达以现状的实际测试数据为基础提供数据表中的所有参数，但对于产品的使用不通过任何形式的保证。如果型录中的信息与数据表中的信息不一致时，以数据表为准(最新的数据表信息请参考 www.DeltaPSU.com) 对于数据表中提供的错误信息而引起的任何索赔或诉讼，台达不承担赔偿责任。客户在向台达下单采购前，应对产品的使用情况进行评估。
台达保留对数据表中描述的信息进行更改而不另行通知的权利。

制造商和授权代理信息

制造商

Thailand
Delta Electronics (Thailand) PCL.
909 Pattana 1 Rd., Muang, Samutprakarn, 10280 Thailand

Taiwan
Delta Electronics, Inc.
3 Tungyuan Road, Chungli Industrial Zone, Taoyuan County 32063, Taiwan

授权代理

The Netherlands
Delta Greentech (Netherlands) B.V.
Zandsteen 15, 2132 MZ Hoofddorp, The Netherlands

United Kingdom
Delta Electronics Europe Limited
1 Redwood Court, Peel Park Campus,
East Kilbride, Glasgow, G74 5PF, United Kingdom

3. Physical Dimension

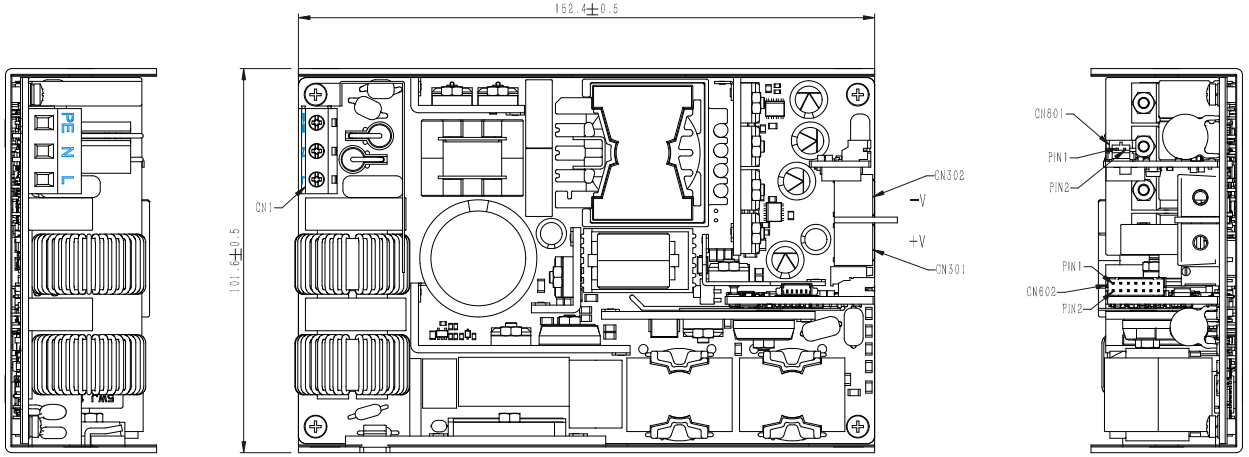

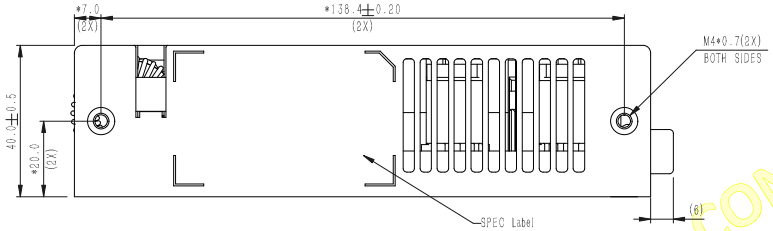

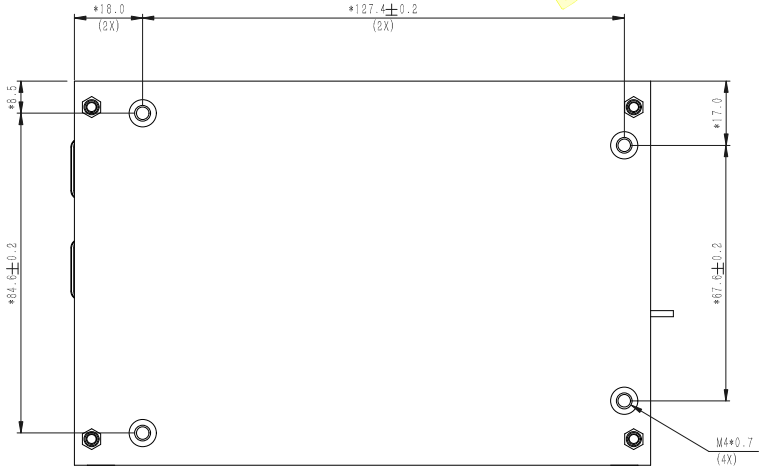

Notes:
1. DIMENSIONS WITH " * " MARK MUST BE INSPECTED AND CONTROLLED STRICTLY BY IQC.
2. THE COLOR OF SPEC LABEL IS WHITE,AND THE COLOR OF WORDS PRINTED ON LABEL IS BLACK.
3. Model name:MEU-650A24T AAA.
4. Model name:MEU-650A48T AAA.
5. Model name:MEU-650A12T AAA.

3ZAD24V1930(Z0527)

ITEM	PIN NO.	FUNCTION	REMARK
CN1 Input Connector	1	Line	DEGSON:DG128-7.5-03P-1Y-1000A(H)
	2	Neutral	
	3	Ground	
CN307	1	Vo	Screw M5*0.8
CN302	1	DC RTN	
CN801	1	DC RTN	JST:S2B-PH-SM4-TB Mating with JST:PHR-2 Terminal:SPH-002T-P0.5S
	2	12V FOR FAN	
CN602 (Control Connector)	1	Current Share	CviLux:CI0114P1HDY-R0-NH Mating With CviLux: CI0114SD000 Terminal:CI01TD21PE0
	2	DC RTN	
	3	Remote Sense +	
	4	Remote Sense -	
	5	DC RTN	
	6	DC RTN	
	7	5V Standby Output +	
	8	5V Standby Output +	
	9	NC	
	10	NC	
	11	Power Good-	
	12	Power Good+	
	13	Remote On_Off/Inhibit +	
	14	Remote On_Off/Inhibit -	

DELTA CONFIDENTIAL

設計驗證
工程課
2023.12.11
發行
宜鋒科技開發股份有限公司

台達電子工業股份有限公司
DELTA ELECTORONICS,INC.

DRAWN: XU.JUE 10/23'20
DESIGN: WANG.XINXIN 10/23'20

THESE DRAWINGS AND SPECIFICATIONS ARE THE PROPERTY OF DELTA ELECTRONICS, INC. AND SHALL NOT BE REPRODUCED OR USED AS THE BASIS FOR THE MANUFACTURE OR SELL OF APPARATUSES OR DEVICES WITHOUT PERMISSION.

THIRD ANGLE PROJECTION

DESCRIPTION: PHYSICAL DIMENSION

DIMENSIONAL TOLERANCES
HOLES: ±0.05 ANGLES: ±0.5°

( )		DECIMALS		(+/-)		( )	
<30	±0.25	X	±0.3	UP-100	±0.2	250-300	±0.4	UP-600	±1.5
>30-100	±0.35	XX	±0.2	100-150	±0.25	300-350	±0.45	600-900	±2.4
>100-300	±0.5	XXX	±0.1	150-200	±0.3	350-400	±0.5	900-OVER	±3.1
ABOVE 300	±0.6			200-250	±0.35				

SIZE: A2
PART NO: MEU-650AXXT AAA
REV: 00

SCALE	1:1	UNIT	mm	USED ON	MEU-650AXXT AAA

SHEET 2 OF 2
ISSUE DATE: 10/23'20

4.Label Drawing

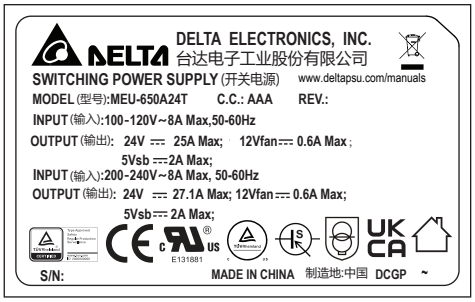

SCALE 1:1

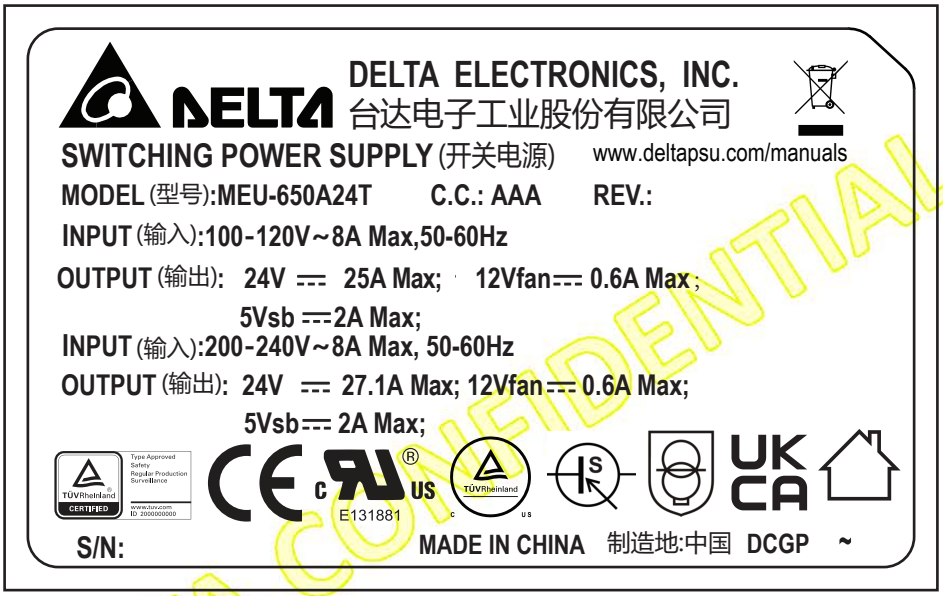

SCALE 2:1

DELTA CONFIDENTIAL

設計驗證
工程課
2023.12.11
發行
鈺緯科技開發股份有限公司

The mark "~" is the label vendor code of DELTA who registered at CSA or UL : 1mm height max.
Refer to 10000-0173-2q: 2.Standard(标准系列)

台達電子工業股份有限公司 DELTA ELECTRONICS, INC.	Drawn: JUE.XU 08/02'23	Design: Fulin.xie 08/02'23
THESE DRAWINGS AND SPECIFICATIONS ARE THE PROPERTY OF DELTA ELECTRONICS, INC. AND SHALL NOT BE REPRODUCED OR USED AS THE BASIS FOR THE MANUFACTURE OR SELL OF APPARATUSES OR DEVICES WITHOUT PERMISSION.	THIRD ANGLE PROJECTION	Description: LABEL

DIMENSIONAL TOLERANCES HOLES : ±0.05 ANGLES : ±0.5°

( )		(V)		( )		( )	
<30	: ±0.25	DECIMALS		UP~100	: ±0.2	250~300	: ±0.4	UP~600	: ±1.5
>30~100	: ±0.35	X	: ±0.3	100~150	: ±0.25	300~350	: ±0.45	600~900	: ±2.4
>100~300	: ±0.5	X.X	: ±0.2	150~200	: ±0.3	350~400	: ±0.5	900~OVER	: ±3.1
ABOVE 300	: ±0.6	X.XX	: ±0.1	200~250	: ±0.35				

SCALE	--	UNIT	mm	USED ON	MEU-650A24T AAA

A4 SIZE	Part No. 326XXXXXXX	REV. 00
	SHEET 1 OF 1	ISSUE DATE: 08/02'23

FRAME NAME: DF-MEA4V-1R01.DWG

5. Packing

NOTES:

⚠1. 9PCS/CARTON*5CARTONS/LAYER*3LAYERS=135PCS/PALLET

2. ALL THE PACKING MATERIAL SHOULD MEET DELTA GENERAL SPEC:10000-0162.

3. 當非滿棧板出貨時,四周仍需使用豎型角紙板(ANGLE PAPER),請包裝/採購單位協助按實際情況裁切適當尺寸,豎型紙板(ANGLE PAPER)長度應儘量接近於Carton箱堆疊後的高度.

	ITEM	PART NO.	NAME	OUTSIDE DIM.(mm)	Q'TY		UNIT
	01	35201301XX	DRYER	WEIGHT=5g	9/9	1.000	PCE
	02	35022428XX	PE BAG	350X155	9/9	1.000	PCE
	03	35064326XX	END BLOCK	238X168X44	18/9	2.000	PCE
	04	35192807XX	BOX	256X172X102	9/9	1.000	PCE
	05	35145383XX	PARTITION	580X370X256	1/9	111.111	TP
	06	35026233XX	FOAM PAD	300X250X20	2/9	222.222	TP
	07	35026229XX	FOAM PAD	400X250X20	2/9	222.222	TP
	08	35027593XX	FOAM PAD	580X370X5	2/9	222.222	TP
	09	35164969XX	PAD PAPER	580X370X5	2/9	222.222	TP
	10	35133340XX	CARTON	602X396X322	1/9	111.111	TP
⚠1	11	35101802XX	ANGLE PAPER	900X55X55	8/135	59.259	TP
⚠1	12	35201427XX	PLASTIC STRIP	12X0.5	26m/135	0.192	MTR
⚠1	13	35200899XX	PE SHEET	1500X1300	1/135	7.407	TP
⚠1	14	35200824XX	PE FILM	t=0.02mm	150g/135	1.111	GRM
⚠1	15	35240292XX	PALLET	1220X1016X120	1/135	7.407	TP

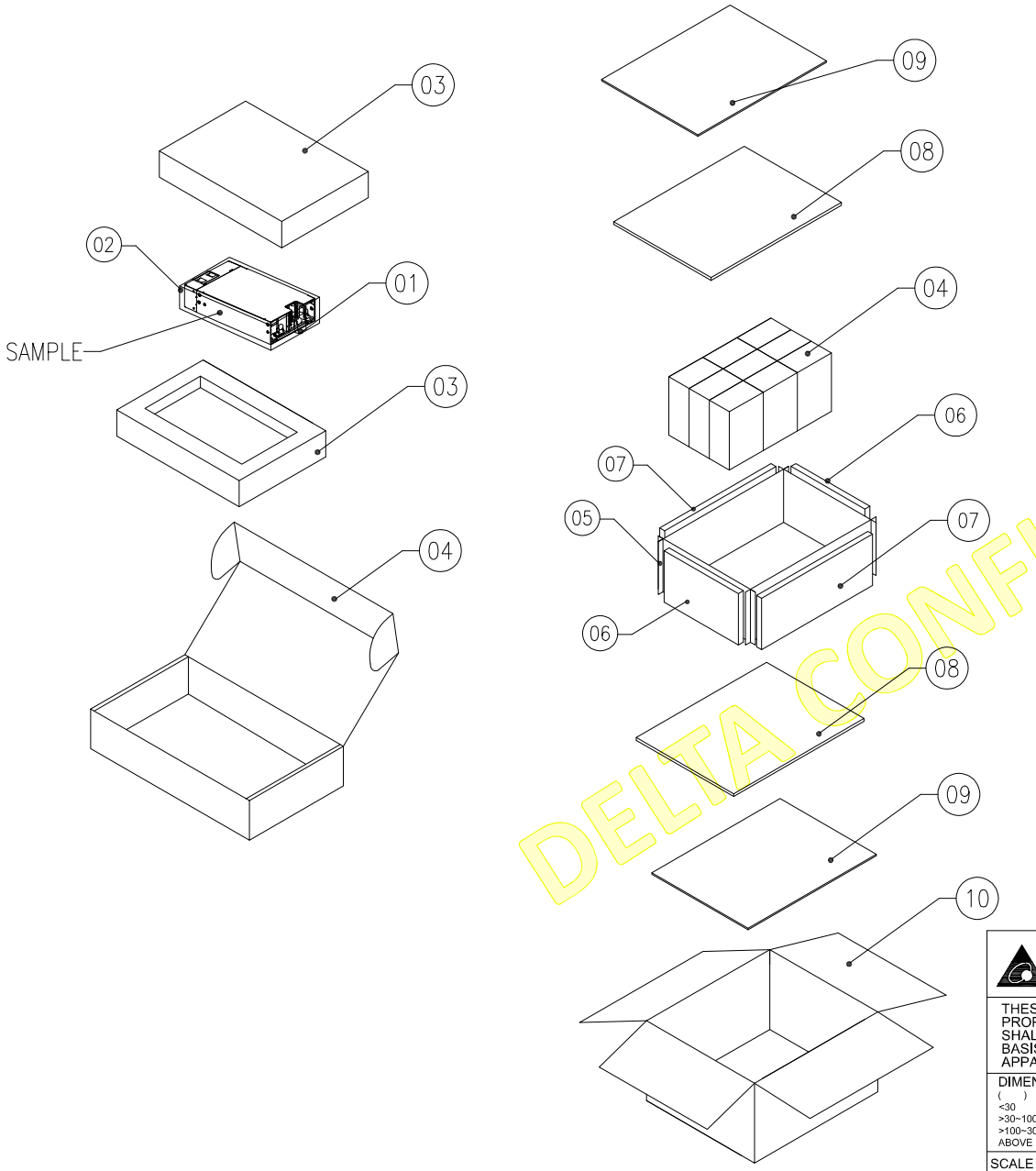

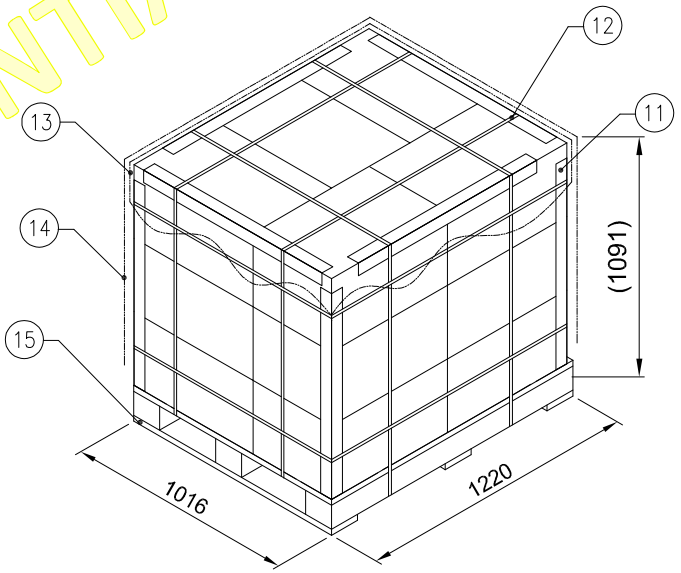

DELTA CONFIDENTIAL

台達電子工業股份有限公司
DELTA ELECTRONICS, INC.

Drawn: XUJUE 08/05'21

Design: XUJUE 08/05'21

THESE DRAWINGS AND SPECIFICATIONS ARE THE PROPERTY OF DELTA ELECTRONICS, INC. AND SHALL NOT BE REPRODUCED OR USED AS THE BASIS FOR THE MANUFACTURE OR SELL OF APPARATUSES OR DEVICES WITHOUT PERMISSION.

THIRD ANGLE PROJECTION

Description: PML

DIMENSIONAL TOLERANCES HOLES : ±0.05 ANGLES : ±0.5°

( ) <30 : ±0.25 >30~100 : ±0.35 >100~300 : ±0.5 ABOVE 300 : ±0.6

( ) DECIMALS X : ±0.3 X.X : ±0.2 X.XX : ±0.1

( ) UP~100 : ±0.2 100~150 : ±0.25 150~200 : ±0.3 200~250 : ±0.35

( ) 250~300 : ±0.4 300~350 : ±0.45 350~400 : ±0.5

(V) UP~600 : ±1.5 600~900 : ±2.4 900~OVER : ±3.1

A3 SIZE

Part No. 3524424200

REV. 01

SCALE	--	UNIT	mm	USED ON	MEU-450A24T AAA

SHEET 2 OF 2 ISSUE DATE: 08/05'21

FRAME NAME: DF-MEA3H-1R01.DWG

6. Safety License

Ref. Certif. No.

DE 2-039490

IEC SYSTEM FOR MUTUAL RECOGNITION OF TEST CERTIFICATES FOR ELECTRICAL EQUIPMENT (IECEE) CB SCHEME

CB TEST CERTIFICATE

Product	SWITCHING POWER SUPPLY
Name and address of the applicant	Delta Electronics, Inc. 3, Tungyuan Road, Chungli Industrial Zone, Taoyuan City 32063 Taiwan
Name and address of the manufacturer	Delta Electronics, Inc. 3, Tungyuan Road, Chungli Industrial Zone, Taoyuan City 32063 Taiwan
Name and address of the factory	See additional page(s)
Ratings and principal characteristics	1) AC 100-120V / 200-240V; 8A / 8A; 50-60Hz; 2) AC 100-240V; 8-4A; 50-60Hz; Class I; for output ratings refer to test report no. CN23P6N8 001 page 10 and 11
Trademark (if any)	Trademark of Delta Electronics, Inc.
Customer's Testing Facility (CTF) Stage used	N/A
Model / Type Ref.	1) MEU-650A24T X1X2X3; MEU-650A48T X1X2X3; MEU-650Z24TA X1X2; MEU-650Z48TA X1X2; 2) MEU-650A12T X1X2X3; MEU-650Z12TA X1X2 (Where X1, X2, X3 can be any alphanumeric character or blank for marketing purpose)
Additional information (if necessary may also be reported on page 2)	
A sample of the product was tested and found to be in conformity with	IEC 60601-1:2005+A1+A2 for national differences see test report
As shown in the Test Report Ref. No. which forms part of this Certificate	CN23P6N8 001

This CB Test Certificate is issued by the National Certification Body

TÜVRheinland®

TÜV Rheinland LGA Products GmbH
Tillystr. 2, 90431 Nürnberg, Germany
Phone + 49 221 806-1371
Fax + 49 221 806-3935
Mail: cert-validity@de.tuv.com
Web : www.tuv.com

Date: 2023-06-28

Signature: Dipl.-Ing. (FH) A. Klinker

10/0861 CB 06/2019 rk

Disclaimer: This is an electronically released document. The authenticity of this certificate can be verified on the IECEE Website "http://certificates.iecee.org"

1. Delta Electronics (Thailand) Public
   Co., Ltd.
   111/6 Moo 9, Wellgrow Industrial Estate,
   Bangna-Trad Road, Tambol Bangwua,
   Amphur Bangpakong, Chachoengsao 24180, Thailand

2. Delta Electronics India Private
   Limited SEZ Unit
   SY No.16/1b2b(Part) & 16/1b2a(Part),
   Plot No.1, Industrial Park,
   Kurubarapalli Village, Krishnagiri, Tamilnadu, 635115, India

3. Delta Electronics (Dongguan) Co., Ltd.
   Southwest Branch
   No.33, Pantao Road, Shijie Town,
   Dongguan, Guangdong 523308,
   P.R. China

4. Delta Electronics (Dongguan) Co., Ltd.
   No.33, Pantao Road, Shijie Town,
   Dongguan, Guangdong 523308,
   P.R. China

5. Delta Electronics (Jiangsu) Ltd.
   215200, No.1688, Jiangxing East Road,
   Wujiang Economic and Technological
   Development Zone
   Suzhou City, Jiangsu Province, P.R. China

6. DELTA ELECTRONICS (WUHU) LTD.
   No. 138, Jiuhua North Road
   LongShan Street
   Economic-technical Development Area
   Wuhu City, Anhui Province, P.R. China

7. Delta Electronics (Thailand) Public
   Co., Ltd.
   909 Soi 9 Moo 4, Bangpoo Industrial
   Estate (E.P.Z.), Pattana 1 Road,
   Tambol Phraksa, Amphur Muang, Samutprakarn 10280, Thailand

Additional information (if necessary) Report Ref. No. : CN23P6N8 001

Date: 2023-06-28 Signature: Dipl.-Ing. (FH) A. Klinker

10/061a CB 06/20v3 rk

Disclaimer: This is an electronically released document. The authenticity of this certificate can be verified on the IECEE Website "http://certificates.iecee.org"

Ref. Certif. No.

DE 2-030884-M2

IEC SYSTEM FOR MUTUAL RECOGNITION OF TEST CERTIFICATES FOR ELECTRICAL EQUIPMENT (IECEE) CB SCHEME

CB TEST CERTIFICATE

Product	SWITCHING POWER SUPPLY
Name and address of the applicant	Delta Electronics, Inc. 3, Tungyuan Road, Chungli Industrial Zone, Taoyuan City 32063 Taiwan
Name and address of the manufacturer	Delta Electronics, Inc. 3, Tungyuan Road, Chungli Industrial Zone, Taoyuan City 32063 Taiwan
Name and address of the factory	See additional page(s)
Ratings and principal characteristics	1) AC 100-120V / 200-240V; 8A / 8A; 50-60Hz; 2) AC 100-240; 8-4A; 50-60Hz; Class I; for output ratings refer to test report no. CN21FVV1 003 page 6
Trademark (if any)	Trademark of Delta Electronics, Inc.
Customer's Testing Facility (CTF) Stage used	N/A
Model / Type Ref.	1) MEU-650A24T X1X2X3; MEU-650A48T X1X2X3; MEU-650Z24TA X1X2; MEU-650Z48TA X1X2; 2) MEU-650A12T X1X2X3; MEU-650Z12TA X1X2 (Where X1, X2, X3 can be any alphanumeric character or blank for marketing purpose)
Additional information (if necessary may also be reported on page 2)	This CBTC refers to CBTC DE 2-030884-M1 issued on 2021-06-24 with the following modification: -see Description of change(s) for update information; -see also test report ref. no. CN21FVV1 001-002
A sample of the product was tested and found to be in conformity with	IEC 60601-1:2005+A1 for national differences see test report
As shown in the Test Report Ref. No. which forms part of this Certificate	CN21FVV1 003

This CB Test Certificate is issued by the National Certification Body

TÜVRheinland®

TÜV Rheinland LGA Products GmbH
Tillystr. 2, 90431 Nürnberg, Germany
Phone + 49 221 806-1371
Fax + 49 221 806-3935
Mail: cert-validity@de.tuv.com
Web : www.tuv.com

Date: 2021-08-09

Signature: Dipl.-Ing. W. Hsu

10/0861 CB 06/2009 rk

Disclaimer: This is an electronically released document. The authenticity of this certificate can be verified on the IECEE Website "http://certificates.iecee.org"

1. Delta Electronics Power (Dongguan) Co., Ltd.
   Delta Industrial Estate
   Xincheng District, Shijie Town
   Dongguan, Guangdong 523308, P.R. China

2. Delta Electronics (Jiangsu) Ltd.
   215200, No.1688, Jiangxing East Road,
   Wujiang Economic and Technological
   Development Zone
   Suzhou City, Jiangsu Province, P.R. China

3. Delta Electronics (Thailand) Public Co., Ltd.
   909 Soi 9 Moo 4, Bangpoo Industrial
   Estate (E.P.Z.), Pattana 1 Road,
   Tambol Phraksa, Amphur Muang, Samutprakarn 10280, Thailand

4. Delta Electronics India Private Limited-SEZ Unit
   Delta SEZ Notified at SY No. 16/1B2B
   Part & 16/1B2A Part Plot No.1, Industrial Park,
   Kurubarapalli Village Krishnagiri Dist, Tamil Nadu, 635115, India

Additional information (if necessary) Report Ref. No. : CN21FVV1 003

Date: 2021-08-09 Signature: Dipl.-Ing. W. Hsu

10/061a CB 06/20v3 rk

Disclaimer: This is an electronically released document. The authenticity of this certificate can be verified on the IECEE Website "http://certificates.iecee.org"

Ref. Certif. No.

JPTUV-120100-M2

IEC SYSTEM FOR MUTUAL RECOGNITION OF TEST CERTIFICATES FOR ELECTRICAL EQUIPMENT (IECEE) CB SCHEME

CB TEST CERTIFICATE

Product	SWITCHING POWER SUPPLY
Name and address of the applicant	Delta Electronics, Inc. 3, Tungyuan Road, Chungli Industrial Zone, Taoyuan City 32063 Taiwan
Name and address of the manufacturer	Delta Electronics, Inc. 3, Tungyuan Road, Chungli Industrial Zone, Taoyuan City 32063 Taiwan
Name and address of the factory	See additional page(s)
Ratings and principal characteristics	Input : 1)-2)AC 100-120V; 8A Max.; 50-60Hz; Class I 1)-2)AC 200-240V; 8A Max.; 50-60Hz; Class I 3)AC 100-240V; 8-4A; 50-60Hz; Class I Output: refer to the test report
Trademark (if any)	Trademark of DELTA ELECTRONICS, INC.
Customer's Testing Facility (CTF) Stage used	N/A
Model / Type Ref.	1) MEU-650A24T X1X2X3, MEU-650Z24TA X1X2 2) MEU-650A48T X1X2X3, MEU-650Z48TA X1X2 3) MEU-650A12T X1X2X3, MEU-650Z12TA X1X2 (X1, X2, X3 can be any alphanumeric character or blank)
Additional information (if necessary may also be reported on page 2)	Additionally evaluated to EN 62368-1:2014+A11:2017 and BS EN 62368-1:2014 + A11:2017. For model differences, refer to the test report. Re-issue of JPTUV-120100-M1 dated 2021-05-28 due to second modification.
A sample of the product was tested and found to be in conformity with	IEC 62368-1:2014 See Test Report for National Differences
As shown in the Test Report Ref. No. which forms part of this Certificate	CN20LVBA 003

This CB Test Certificate is issued by the National Certification Body

TÜVRheinland®

TÜV Rheinland Japan Ltd.
Global Technology Assessment Center
4-25-2 Kita-Yamata, Tsuzuki-ku
Yokohama 224-0021, Japan
Phone + 81 45 914-3888
Fax + 81 45 914-3354
Mail: info@jpn.tuv.com
Web : www.tuv.com

Date: 2021-07-20

Signature:

Dipl.-Ing. Th. Illing

10/0861 CB 06/20v9 rk

Disclaimer: This is an electronically released document. The authenticity of this certificate can be verified on the IECEE Website "http://certificates.iecee.org"

1. Delta Electronics Power (Dongguan) Co., Ltd.
   Delta Industrial Estate
   Xincheng District, Shijie Town
   Dongguan, Guangdong 523308, P.R. China

2. Delta Electronics (Thailand) Public Co., Ltd.
   909 Soi 9 Moo 4, Bangpoo Industrial Estate (E.P.Z.), Pattana 1 Road
   Tambol Phraksa, Amphur Muang, Samutprakarn 10280, Thailand

3. Delta Electronics (Jiangsu) Ltd.
   215200, No.1688, Jiangxing East Road,
   Wujiang Economic and Technological Development Zone
   Suzhou City, Jiangsu Province, P.R. China

4. Delta Electronics India Private Limited-SEZ Unit
   Delta SEZ Notified at SY No. 16/1B2B Part & 16/1B2A Part Plot No.1, Industrial Park,
   Kurubarapalli Village Krishnagiri Dist, Tamil Nadu, 635115, India

Additional information (if necessary) Report Ref. No. : CN20LVBA 003

Date: 2021-07-20 Signature: Dipl.-Ing. Th. Illing

10/061a CB 06/20v3 rk

Disclaimer: This is an electronically released document. The authenticity of this certificate can be verified on the IECEE Website "http://certificates.iecee.org"

Ref. Certif. No.

JPTUV-120419-M2

IEC SYSTEM FOR MUTUAL RECOGNITION OF TEST CERTIFICATES FOR ELECTRICAL EQUIPMENT (IECEE) CB SCHEME

CB TEST CERTIFICATE

Product	SWITCHING POWER SUPPLY
Name and address of the applicant	Delta Electronics, Inc. 3, Tungyuan Road, Chungli Industrial Zone, Taoyuan City 32063 Taiwan
Name and address of the manufacturer	Delta Electronics, Inc. 3, Tungyuan Road, Chungli Industrial Zone, Taoyuan City 32063 Taiwan
Name and address of the factory	See additional page(s)
Ratings and principal characteristics	Input : 1)-2) AC 100-120V or AC 200-240V; 8A Max.; 50-60Hz; Class I 3) AC 100-240V; 8-4A; 50-60Hz; Class I Output: refer to the test report
Trademark (if any)	Trademark of DELTA ELECTRONICS, INC.
Customer's Testing Facility (CTF) Stage used	N/A
Model / Type Ref.	1) MEU-650A24T X1X2X3, MEU-650Z24TA X1X2 2) MEU-650A48T X1X2X3, MEU-650Z48TA X1X2 3) MEU-650A12T X1X2X3, MEU-650Z12TA X1X2 (X1, X2, X3 can be any alphanumeric character or blank)
Additional information (if necessary may also be reported on page 2)	For model differences, refer to the test report. Re-issue of JPTUV-120419-M1 dated 2021-06-17, due to second modification.
A sample of the product was tested and found to be in conformity with	IEC 60950-1:2005+A1+A2 See Test Report for National Differences
As shown in the Test Report Ref. No. which forms part of this Certificate	CN200MRD 003

This CB Test Certificate is issued by the National Certification Body

TÜVRheinland®

TÜV Rheinland Japan Ltd.
Global Technology Assessment Center
4-25-2 Kita-Yamata, Tsuzuki-ku
Yokohama 224-0021, Japan
Phone + 81 45 914-3888
Fax + 81 45 914-3354
Mail: info@jpn.tuv.com
Web : www.tuv.com

Date: 2021-08-02

Signature:

Dipl.-Ing. Th. Illing

10/0861 CB 06/2009 rk

Disclaimer: This is an electronically released document. The authenticity of this certificate can be verified on the IECEE Website "http://certificates.iecee.org"

1. Delta Electronics Power (Dongguan) Co., Ltd.
   Delta Industrial Estate
   Xincheng District, Shijie Town
   Dongguan, Guangdong 523308, P.R. China

2. Delta Electronics (Thailand) Public Co., Ltd.
   909 Soi 9 Moo 4, Bangpoo Industrial Estate (E.P.Z.), Pattana 1 Road
   Tambol Phraksa, Amphur Muang, Samutprakarn 10280, Thailand

3. Delta Electronics (Jiangsu) Ltd.
   215200, No.1688, Jiangxing East Road,
   Wujiang Economic and Technological Development Zone
   Suzhou City, Jiangsu Province, P.R. China

4. Delta Electronics India Private Limited-SEZ Unit
   Delta SEZ Notified at SY No. 16/1B2B Part & 16/1B2A Part Plot No.1, Industrial Park,
   Kurubarapalli Village Krishnagiri Dist, Tamil Nadu, 635115, India

Additional information (if necessary) Report Ref. No. : CN200MRD 003

Date: 2021-08-02 Signature: Dipl.-Ing. Th. Illing

10/061a CB 06/20v3 rk

Disclaimer: This is an electronically released document. The authenticity of this certificate can be verified on the IECEE Website "http://certificates.iecee.org"

Ref. Certif. No.

DE 2-031511-M1

IEC SYSTEM FOR MUTUAL RECOGNITION OF TEST CERTIFICATES FOR ELECTRICAL EQUIPMENT (IECEE) CB SCHEME

CB TEST CERTIFICATE

Product	SWITCHING POWER SUPPLY
Name and address of the applicant	Delta Electronics, Inc. 3, Tungyuan Road, Chungli Industrial Zone, Taoyuan City 32063 Taiwan
Name and address of the manufacturer	Delta Electronics, Inc. 3, Tungyuan Road, Chungli Industrial Zone, Taoyuan City 32063 Taiwan
Name and address of the factory	See additional page(s)
Ratings and principal characteristics	Input : 1) AC 100-120V; 8A Max.; 50-60Hz; Class I AC 200-240V; 8A Max.; 50-60Hz; Class I 2) AC 100-240V; 8-4A; 50-60Hz; Class I Output: refer to the test report
Trademark (if any)	Trademark of DELTA ELECTRONICS, INC.
Customer's Testing Facility (CTF) Stage used	N/A
Model / Type Ref.	1) MEU-650A24T X1X2X3, MEU-650Z24TA X1X2 2) MEU-650A12T X1X2X3, MEU-650Z12TA X1X2 (X1, X2, X3 can be any alphanumeric character or blank)
Additional information (if necessary may also be reported on page 2)	- change model name from MEU-650A24T to MEU-650A24T X1X2X3 - add additional model MEU-650Z24TA X1X2, MEU-650A12T X1X2X3 and MEU-650Z12TA X1X2, for details refer to the test report - see also test report ref no. CN2017YT 001
A sample of the product was tested and found to be in conformity with	IEC 61558-2-16:2009+A1 IEC 61558-1:2005+A1 See Test Report for National Differences
As shown in the Test Report Ref. No. which forms part of this Certificate	CN2017YT 002

This CB Test Certificate is issued by the National Certification Body

TÜVRheinland®

TÜV Rheinland LGA Products GmbH
Tillystr. 2, 90431 Nürnberg, Germany
Phone + 49 221 806-1371
Fax + 49 221 806-3935
Mail: cert-validity@de.tuv.com
Web : www.tuv.com

Date: 2021-07-29

Signature:

Dipl.-Ing. F. Stoelzel

10/0861 CB 06/2009 rk

Disclaimer: This is an electronically released document. The authenticity of this certificate can be verified on the IECEE Website "http://certificates.iecee.org"

1. Delta Electronics (Jiangsu) Ltd.
   215200, No. 1688, Jiangxing East Road
   Wujiang Economic and Technological
   Development Zone
   Suzhou City, Jiangsu Province, P.R. China

2. Delta Electronics Power (Dongguan) Co.,
   Ltd.
   Delta Industrial Estate
   Xincheng District, Shijie Town
   Dongguan, Guangdong 523308, P.R. China

3. Delta Electronics (Thailand) Public
   Co., Ltd.
   909 Soi 9 Moo 4, Bangpoo Industrial
   Estate (E.P.Z.), Pattana 1 Road
   Tambol Phraksa, Amphur Muang, Samutprakarn 10280, Thailand

4. Delta Electronics India Private
   Limited-SEZ Unit
   Delta SEZ Notified at SY No. 16/1B2B
   Part & 16/1B2A Part Plot No.1, Industrial Park,
   Kurubarapalli Village Krishnagiri Dist, Tamil Nadu, 635115, India

Additional information (if necessary) Report Ref. No. : CN2017YT 002

Date: 2021-07-29 Signature: Dipl.-Ing. F. Stoelzel

10/061a CB 06/20v3 rk

Disclaimer: This is an electronically released document. The authenticity of this certificate can be verified on the IECEE Website "http://certificates.iecee.org"

Ref. Certif. No.

JPTUV-139865

IEC SYSTEM FOR MUTUAL RECOGNITION OF TEST CERTIFICATES FOR ELECTRICAL EQUIPMENT (IECEE) CB SCHEME

CB TEST CERTIFICATE

Product	SWITCHING POWER SUPPLY
Name and address of the applicant	Delta Electronics, Inc. 3, Tungyuan Road, Chungli Industrial Zone, Taoyuan City 32063 Taiwan
Name and address of the manufacturer	Delta Electronics, Inc. 3, Tungyuan Road, Chungli Industrial Zone, Taoyuan City 32063 Taiwan
Name and address of the factory	See additional page(s)
Ratings and principal characteristics	Input : 1)-4) AC 100-120V, 200-240V; 8A Max; 50-60Hz; 5)-6) AC 100-240V,8-4A; 50-60Hz; Class I Output: refer to the test report
Trademark (if any)	Trademark of Delta Electronics, Inc.
Customer's Testing Facility (CTF) Stage used	N/A
Model / Type Ref.	1) MEU-650A24T X1X2X3, 2) MEU-650Z24TA X1X2, 3) MEU-650A48T X1X2X3, 4) MEU-650Z48TA X1X2, 5) MEU-650A12T X1X2X3, 6) MEU-650Z12TA X1X2 (X1, X2, X3 = alphanumeric character or blank)
Additional information (if necessary may also be reported on page 2)	Additionally evaluated to EN IEC 62368-1:2020+A11:2020. Additionally evaluated to BS EN IEC 62368-1:2020+A11:2020. For model differences, refer to the test report.
A sample of the product was tested and found to be in conformity with	IEC 62368-1:2018 See Test Report for National Differences
As shown in the Test Report Ref. No. which forms part of this Certificate	CN22OJMZ 001

This CB Test Certificate is issued by the National Certification Body

TÜVRheinland®

TÜV Rheinland Japan Ltd.
Global Technology Assessment Center
4-25-2 Kita-Yamata, Tsuzuki-ku
Yokohama 224-0021, Japan
Phone + 81 45 914-3888
Fax + 81 45 914-3354
Mail: info@jpn.tuv.com
Web : www.tuv.com

Date: 2022-09-22

Signature:

Dipl.-Ing. Th. Illing

10/0861 CB 06/20v9 rk

Disclaimer: This is an electronically released document. The authenticity of this certificate can be verified on the IECEE Website "http://certificates.iecee.org"

1. Delta Electronics (Dongguan) Co., Ltd.
   No.33, Pantao Road, Shijie Town,
   Dongguan, Guangdong 523308,
   P.R. China

2. Delta Electronics (Dongguan) Co., Ltd.
   Southwest Branch
   No.33, Pantao Road, Shijie Town,
   Dongguan, Guangdong 523308,
   P.R. China

3. Delta Electronics (Jiangsu) Ltd.
   215200, No.1688, Jiangxing East Road,
   Wujiang Economic and Technological
   Development Zone
   Suzhou City, Jiangsu Province, P.R. China

4. Delta Electronics (Thailand) Public
   Co., Ltd.
   909 Soi 9 Moo 4, Bangpoo Industrial
   Estate (E.P.Z.), Pattana 1 Road,
   Tambol Phraksa, Amphur Muang, Samutprakarn 10280, Thailand

5. Delta Electronics (Thailand) Public
   Co., Ltd.
   111/6 Moo 9, Wellgrow Industrial Estate,
   Bangna-Trad Road, Tambol Bangwua,
   Amphur Bangpakong, Chachoengsao 24180, Thailand

6. Delta Electronics India Private
   Limited-SEZ Unit
   Delta SEZ Notified at SY No. 16/1B2B
   Part & 16/1B2A Part Plot No.1,
   Industrial Park, Kurubarapalli Village, Krishnagiri Dist, Tamil Nadu,
   635115, India

7. DELTA ELECTRONICS (WUHU) LTD.
   No. 138, Jiuhua North Road
   LongShan Street
   Economic-technical Development Area
   Wuhu City, Anhui Province, P.R. China

Additional information (if necessary) Report Ref. No. : CN22OJMZ 001

Date: 2022-09-22 Signature: Dipl.-Ing. Th. Illing

10/061a CB 06/20v3 rk

Disclaimer: This is an electronically released document. The authenticity of this certificate can be verified on the IECEE Website "http://certificates.iecee.org"

Ref. Certif. No.

JPTUV-120864-M1

IEC SYSTEM FOR MUTUAL RECOGNITION OF TEST CERTIFICATES FOR ELECTRICAL EQUIPMENT (IECEE) CB SCHEME

CB TEST CERTIFICATE

Product	SWITCHING POWER SUPPLY
Name and address of the applicant	Delta Electronics, Inc. 3, Tungyuan Road, Chungli Industrial Zone, Taoyuan City 32063 Taiwan
Name and address of the manufacturer	Delta Electronics, Inc. 3, Tungyuan Road, Chungli Industrial Zone, Taoyuan City 32063 Taiwan
Name and address of the factory	See additional page(s)
Ratings and principal characteristics	Input : 1) AC 100-120V or AC 200-240V; 8A Max.; 50-60Hz 2) AC 100-240V; 8-4A; 50-60Hz; Class I Output: refer to the test report
Trademark (if any)	Trademark of DELTA ELECTRONICS, INC.
Customer's Testing Facility (CTF) Stage used	N/A
Model / Type Ref.	1) MEU-650A24T X1X2X3, MEU-650Z24TA X1X2 2) MEU-650A12T X1X2X3, MEU-650Z12TA X1X2 (X1, X2, X3 can be any alphanumeric character or blank)
Additional information (if necessary may also be reported on page 2)	For model differences, refer to the test report. Re-issue of JPTUV-120864 dated 2021-04-01, due to first modification.
A sample of the product was tested and found to be in conformity with	IEC 60335-1:2010+A1+A2 See Test Report for National Differences
As shown in the Test Report Ref. No. which forms part of this Certificate	CN20RJJO 002

This CB Test Certificate is issued by the National Certification Body

TÜVRheinland®

TÜV Rheinland Japan Ltd.
Global Technology Assessment Center
4-25-2 Kita-Yamata, Tsuzuki-ku
Yokohama 224-0021, Japan
Phone + 81 45 914-3888
Fax + 81 45 914-3354
Mail: info@jpn.tuv.com
Web : www.tuv.com

Date: 2021-08-06

Signature:

Dipl.-Ing. Th. Illing

10/0861 CB 06/20v9 rk

Disclaimer: This is an electronically released document. The authenticity of this certificate can be verified on the IECEE Website "http://certificates.iecee.org"

1. Delta Electronics Power (Dongguan) Co., Ltd.
   Delta Industrial Estate
   Xincheng District, Shijie Town
   Dongguan, Guangdong 523308, P.R. China

2. Delta Electronics (Thailand) Public Co., Ltd.
   909 Soi 9 Moo 4, Bangpoo Industrial Estate (E.P.Z.), Pattana 1 Road,
   Tambol Phraksa, Amphur Muang, Samutprakarn 10280, Thailand

3. Delta Electronics (Jiangsu) Ltd.
   215200, No.1688, Jiangxing East Road,
   Wujiang Economic and Technological Development Zone
   Suzhou City, Jiangsu Province, P.R. China

4. Delta Electronics India Private Limited-SEZ Unit
   Delta SEZ Notified at SY No. 16/1B2B Part & 16/1B2A Part Plot No.1, Industrial Park,
   Kurubarapalli Village Krishnagiri Dist, Tamil Nadu, 635115, India

Additional information (if necessary) Report Ref. No. : CN20RJJO 002

Date: 2021-08-06 Signature: Dipl.-Ing. Th. Illing

10/061a CB 06/20v3 rk

Disclaimer: This is an electronically released document. The authenticity of this certificate can be verified on the IECEE Website "http://certificates.iecee.org"

Delta Electronics, Inc

Declaration of Conformity

Ref No: EISBG-102P-202007025-CE

Manufacturer name: Delta Electronics, Inc.

Add: 3, Tungyuan Road, Chungli Industrial Zone, Taoyuan City 32063, Taiwan

Tel: 886- 3- 4526107

Fax: 886 -3- 4527314

Is herewith confirmed the following equipment

Product: SWITCHING POWER SUPPLY

Brand name: Delta

Type Designation: MEU-650A24T

Input Rating: 1. AC 100-120V, 8A Max., 50-60Hz

2. AC 200-240V, 8A Max., 50-60Hz

Output rating: 1. DC 24V/25A Max., 12Vfan/0.6A Max., 5Vsb/2A Max.

2. DC 24V/27.1A Max., 12Vfan / 0.6A Max., 5Vsb / 2A Max.

Comply with the following directives and requirements set out in the Council Directive on the Approximation for the Laws of the Member States

☒ Low Voltage Directive 2014/35/EU

- ☒ EN 62368-1:2014+A11:2017 (Report No: CN20LVBA 001)
- ☐ EN 61558-2-16: 2009+A1:2013 used in conjunction with EN 61558-1: 2005+A1: 2009 (Report No)
- ☒ EN 60335-1:2012 + AC:2014 + A11:2014 + A13:2017 + A1:2019 + A14:2019 + A2:2019, EN 62233:2008 + AC:2008 (Report No: CN20RJJO 001)

☐ MDR Regulation 2017/745

- ☒ EN 60601-1: 2006 + A11: 2011 + A1: 2013 + A12: 2014 (Report No: CN21FVV1 001)
- ☒ EN 60601-1-2: 2015 (Report No: CEBAPP-WTW-P21020201-1)
- ☒ CISPR 11:2009+A1:2010 (Group I, Class B)
- ☒ IEC 61000-3-2: 2014
- ☒ IEC 61000-3-2: 2018
- ☒ IEC 61000-3-3: 2013
- ☒ IEC 61000-3-3: 2017

☒ EMC Directive 2014/30/EU

- ☒ EN 55032 : 2015+A11 :2020 Class B
- ☒ EN 55035 : 2017
- ☒ EN 55014-1 : 2017+A11 :2020
- ☒ EN 55014-2 : 2015
- ☒ EN 61000-3-2 : 2014

Delta Electronics, Inc

- ☒ EN IEC 61000-3-2 : 2019
- ☒ EN 61000-3-3 : 2013
- ☒ EN 61000-3-3 : 2013+A1:2019
- ☒ IEC 61000-4-2 : 2008: Edition 2.0
- ☒ IEC 61000-4-3 : 2010: Edition 3.2
- ☒ IEC 61000-4-4 : 2012: Edition 3.0
- ☒ IEC 61000-4-5 : 2014+A1:2017 : Edition 3.0
- ☒ IEC 61000-4-6 : 2013: Edition 4.0
- ☒ IEC 61000-4-8 : 2009: Edition 2.0
- ☒ IEC 61000-4-11 : 2004+A1:2017: Edition 2.0

  (Report No: CEBAPP-WTW-P21020201, CEBAPP-WTW-P21020201-2)

☒ RoHS Directive 2011/65/EU+ (EU) 2020/659

- ☒ EN IEC 63000:2018 (Issue No: 20210310-2)

The first time to declare CE is at 2021

This declaration of conformity is issued under the sole responsibility of the manufacturer.

Person responsible for making this declaration

Name, Surname: Sam Tien

Title: Principal Engineer

Place: Taiwan

Date: 2021-04-01

Signature: 

Delta Electronics, Inc

UKCA Declaration of Conformity

Ref No: EISBG-102P-202007025-UKCA

Manufacturer name: Delta Electronics, Inc.

Add: 3, Tungyuan Road, Chungli Industrial Zone, Taoyuan City 32063, Taiwan

Tel: 886- 3- 4526107

Fax: 886 -3- 4527314

Is herewith confirmed the following equipment

Product: SWITCHING POWER SUPPLY

Brand name: Delta

Type Designation: MEU-650A24T

Input Rating: 1. AC 100-120V, 8A Max., 50-60Hz

2. AC 200-240V, 8A Max., 50-60Hz

Output rating: 1. DC 24V/25A Max., 12Vfan/0.6A Max., 5Vsb/2A Max.

2. DC 24V/27.1A Max., 12Vfan / 0.6A Max., 5Vsb / 2A Max.

On 1 January 2021 the UK standards will be the same in substance and with the same reference as the standards used in the EU. However, they will use the prefix 'BS' to indicate that they are standards adopted by the British Standards Institution as the UK's national standards body.

The UK regulations that correspond to the EU directives are as linked.

☒ Electrical Equipment (Safety) Regulations 2016

- ☒ BS EN 62368-1:2014+A11:2017 (Report No: CN20LVBA 001)
- ☐ BS EN 61558-2-16: 2009+A1:2013 used in conjunction with BS EN 61558-1: 2005+A1: 2009 (Report No)
- ☒ BS EN 60335-1:2012 + AC:2014 + A11:2014 + A13:2017 + A1:2019 + A14:2019 + A2:2019, BS EN 62233:2008 + AC:2008 (Report No: CN20RJJO 001)

☒ Medical Devices Regulations 2002 (SI 2002 No 618, as amended) (UK MDR 2002)

- ☒ BS EN 60601-1: 2006 + A11: 2011 + A1: 2013 + A12: 2014 (Report No: CN21FVV1 001)
- ☒ BS EN 60601-1-2: 2015 (Report No: CEBAPP-WTW-P21020201-1)
- ☒ CISPR 11:2009+A1:2010 (Group I, Class B)
- ☒ IEC 61000-3-2: 2014
- ☒ IEC 61000-3-2: 2018
- ☒ IEC 61000-3-3: 2013
- ☒ IEC 61000-3-3: 2017

☒ Electromagnetic Compatibility Regulations 2016

- ☒ BS EN 55032 : 2015+A11 :2020 Class B
- ☒ BS EN 55035 : 2017

Delta Electronics, Inc

- ☒ BS EN 55014-1 : 2017+A11 :2020
- ☒ BS EN 55014-2 : 2015
- ☒ BS EN 61000-3-2 : 2014
- ☒ BS EN IEC 61000-3-2 : 2019
- ☒ BS EN 61000-3-3 : 2013
- ☒ BS EN 61000-3-3 : 2013+A1:2019
- ☒ IEC 61000-4-2 : 2008: Edition 2.0
- ☒ IEC 61000-4-3 : 2010: Edition 3.2
- ☒ IEC 61000-4-4 : 2012: Edition 3.0
- ☒ IEC 61000-4-5 : 2014+A1:2017 : Edition 3.0
- ☒ IEC 61000-4-6 : 2013: Edition 4.0
- ☒ IEC 61000-4-8 : 2009: Edition 2.0
- ☒ IEC 61000-4-11 : 2004+A1:2017: Edition 2.0

  (Report No: CEBAPP-WTW-P21020201, CEBAPP-WTW-P21020201-2)

☒ The Restriction of the Use of Certain Hazardous Substances in Electrical and Electronic Equipment Regulations 2012 (as amended 2019,2020)

- ☐ BS EN IEC 63000 :2018 (Issue No: 20210310-2)

This declaration of conformity is issued under the sole responsibility of the manufacturer.

Person responsible for making this declaration

Name, Surname: Sam Tien

Title: Principal Engineer

Place: Taiwan

Date: 2021-04-01

Signature: 

Certificate

TÜVRheinland®

Certificate no. CU 72210649 01

License Holder:
Delta Electronics, Inc.
3, Tungyuan Road,
Chungli Industrial Zone,
Taoyuan City 32063
Taiwan

Manufacturing Plant:
Delta Electronics (Jiangsu) Ltd.
215200, No.1688, Jiangxing East Road,
Wujiang Economic and Technological
Development Zone
Suzhou City, Jiangsu Province
P.R. China

Test report no.: USA-AK CN216741 001 **Client Reference:** Sam Tien

Tested to: CAN/CSA-C22.2 No. 60601-1:14
ANSI/AAMI ES60601-1:2005+A2 (R2012) +A1

Certified Product: SWITCHING POWER SUPPLY **License Fee - Units**

Model Designation: MEU-650A24T

Rated Voltage: AC 100-120V, 50-60Hz
AC 200-240V, 50-60Hz
Rated Current: 8A
Output Ratings: see construction dataform
max. total power: see construction dataform
Protection Class: Class I
Rated Ambient Temperature: 50°C max.(full load)
70°C max.(de-rating half load)

Appendix: 1, 1-17

Licensed Test mark:

TÜVRheinland
C US

Date of Issue (day/mo/yr)
23/02/2021

Zertifikat *Certificate*

TÜVRheinland®

Zertifikat Nr. *Certificate No.*
R 50495615

Blatt *Sheet*
0001

Ihr Zeichen *Client Reference*	Unser Zeichen *Our Reference*	Ausstellungsdatum	*Date of Issue*
EISBG-102P-202007025	ZTW1--CN212H2P 001	23.02.2021	*(day/mo/yr)*

Genehmigungsinhaber *License Holder*
Delta Electronics, Inc.
3, Tungyuan Road,
Chungli Industrial Zone,
Taoyuan City 32063
Taiwan

Fertigungsstätte *Manufacturing Plant*
Refer to latest revision
of the annex list of factories

Prüfzeichen *Test Mark*

TÜVRheinland® ZERTIFIZIERT
Bauart geprüft
Sicherheit
Regelmäßige Produktions-überwachung
www.tuv.com
ID 1111236453

Geprüft nach *Tested acc. to*
IEC 60601-1:2005+A1
EN 60601-1:2006+A11+A1+A12

Zertifiziertes Produkt (Geräteidentifikation)
Certified Product ***(Product Identification)***

Lizenzentgelte - Einheit
License Fee - Unit

Einbauschaltnetzteil (SWITCHING POWER SUPPLY)

Bezeichnung (Type Designation)	:	MEU-650A24T
Nennspannung (Rated Voltage)	:	AC 100-120V, 50-60Hz AC 200-240V, 50-60Hz
Nennstrom (Rated Current)	:	8A
Ausgang (Output)	:	siehe Aufbau-Übersicht (see constructional dataform)
max. Ausgangsleistung (max. Output Power)	:	siehe Aufbau-Übersicht (see constructional dataform)
Schutzklasse (Protection Class)	:	I
max. Umgebungstemperatur (max. Ambient Temperature)	:	+50°C (full load) +70°C (de-rating half load)

ANLAGE (Appendix): 1

Dem Zertifikat liegt unsere Prüf- und Zertifizierungsordnung zugrunde und es bestätigt die Konformität des Produktes mit den oben genannten Standards und Prüfgrundlagen. Zusätzliche Anforderungen in Ländern, in denen das Produkt in Verkehr gebracht werden soll, müssen zusätzlich betrachtet werden. Die Herstellung des zertifizierten Produktes wird überwacht.
This certificate is based on our Testing and Certification Regulation and states the conformity of the product with the standards and testing requirements as indicated above. Any additional requirements in countries where the product is going to be marketed have to be considered additionally. The manufacturing of the certified product is subject to surveillance.

TÜV Rheinland LGA Products GmbH, Tillystraße 2, 90431 Nürnberg
Tel.: +49 221 806-1371 e-mail: cert-validity@de.tuv.com
Fax: +49 221 806-3935 http://www.tuv.com/safety

Zertifizierungsstelle

TÜV Rheinland LGA Products GmbH TÜVRheinland® Zertifizierungsstelle

Dipl.-Ing. W. Hsu

10/020 d 04.08 ® TÜV, TUEV and TUV are registered trademarks. Utilisation and application requires prior approval.

Anlage Fertigungsstättenliste
/Attachment List of Factories

TÜVRheinland®

R 50495615 0001

1 Delta Electronics Power (Dongguan) Co., Ltd.
Delta Industrial Estate
Xincheng District, Shijie Town
Dongguan, Guangdong 523308
P.R. China

2 Delta Electronics (Jiangsu) Ltd.
215200, No.1688, Jiangxing East Road,
Wujiang Economic and Technological
Development Zone
Suzhou City, Jiangsu Province
P.R. China

3 Delta Electronics (Thailand) Public Co., Ltd.
909 Soi 9 Moo 4, Bangpoo Industrial Estate (E.P.Z.), Pattana 1 Road,
Tambol Phraksa, Amphur Muang,
Samutprakarn 10280
Thailand

Dieser Anhang ersetzt den Vorgänger vom/
This annex replaces the previous annex dated

Datum / Date 23.02.2021

Zertifizierungsstelle
/ Certification Body

Dipl.-Ing. W. Hsu

TÜV Rheinland LGA Products GmbH
TÜVRheinland®
Zertifizierungsstelle

10/020 d 04.08 ® TÜV, TUEV and TUV are registered trademarks. Utilisation and application requires prior approval.

Zertifikat *Certificate*

TÜVRheinland®

Zertifikat Nr. *Certificate No.*
R 50497430

Blatt *Sheet*
0001

Ihr Zeichen *Client Reference*	**Unser Zeichen** *Our Reference*	**Ausstellungsdatum**	*Date of Issue*
EISBG-102P-202007025	ZTW2-HCY-CN20BKPX 001	12.03.2021	*(day/mo/yr)*

Genehmigungsinhaber *License Holder*
Delta Electronics, Inc.
3, Tungyuan Road,
Chungli Industrial Zone,
Taoyuan City 32063
Taiwan, R.O.C.

Fertigungsstätte *Manufacturing Plant*
Refer to latest revision
of the annex list of factories

Prüfzeichen *Test Mark*

TÜVRheinland® ZERTIFIZIERT
Bauart geprüft
Sicherheit
Regelmäßige Produktions-überwachung
www.tuv.com
ID 1111237381

Geprüft nach *Tested acc. to*
EN 62368-1:2014+A11

Zertifiziertes Produkt (Geräteidentifikation)
Certified Product (Product Identification)

Lizenzentgelte - Einheit
License Fee - Unit

Einbau-Schaltnetzteil (SWITCHING POWER SUPPLY)

Bezeichnung (Type Designation)	: MEU-650A24T
Nennspannungen (Rated Voltages)	: 1) AC 100-120V, 50-60Hz 2) AC 200-240V, 50-60Hz
Nennstrom (Rated Current)	: 8A Max.
Ausgänge (Outputs)	: 1) DC 24V/25A Max., DC 12Vfan/0.6A Max., DC 5Vsb/2A Max. 2) DC 24V/27.1A Max., DC 12Vfan/0.6A Max., DC 5Vsb/2A Max.
max. Umgebungstemperatur (max. Ambient Temperature)	: siehe Anlage (see Appendix)
max. Betriebshöhe (max. Operating Altitude)	: 5000m
Schutzklasse (Protection Class)	: I

ANLAGE (Appendix): 1.0

Dem Zertifikat liegt unsere Prüf- und Zertifizierungsordnung zugrunde und es bestätigt die Konformität des Produktes mit den oben genannten Standards und Prüfgrundlagen. Zusätzliche Anforderungen in Ländern, in denen das Produkt in Verkehr gebracht werden soll, müssen zusätzlich betrachtet werden. Die Herstellung des zertifizierten Produktes wird überwacht.
This certificate is based on our Testing and Certification Regulation and states the conformity of the product with the standards and testing requirements as indicated above. Any additional requirements in countries where the product is going to be marketed have to be considered additionally. The manufacturing of the certified product is subject to surveillance.

Zertifizierungsstelle

TÜVRheinland LGA Products GmbH Zertifizierungsstelle

Dipl.-Ing. Th. Illing

TÜV Rheinland LGA Products GmbH, Tillystraße 2, 90431 Nürnberg
Tel.: +49 221 806-1371 e-mail: cert-validity@de.tuv.com
Fax: +49 221 806-3935 http://www.tuv.com/safety

10/020 d 04.08 ® TÜV, TUEV and TUV are registered trademarks. Utilisation and application requires prior approval.

Anlage Fertigungsstättenliste
/Attachment List of Factories

R 50497430 0001

1 Delta Electronics (Thailand) Public Co., Ltd.
909 Soi 9 Moo 4, Bangpoo Industrial Estate (E.P.Z.), Pattana 1 Road,
Tambol Phraksa, Amphur Muang,
Samutprakarn 10280
Thailand

2 Delta Electronics (Jiangsu) Ltd.
215200, No.1688, Jiangxing East Road,
Wujiang Economic and Technological Development Zone
Suzhou City, Jiangsu Province
P.R. China

3 Delta Electronics Power (Dongguan) Co., Ltd.
Delta Industrial Estate
Xincheng District, Shijie Town
Dongguan, Guangdong 523308
P.R. China

Dieser Anhang ersetzt den Vorgänger vom/
This annex replaces the previous annex dated

Datum / Date 12.03.2021

TÜV Rheinland LGA Products GmbH Zertifizierungsstelle

Zertifizierungsstelle
/ Certification Body

Dipl.-Ing. Th. Illing

10/020 d 04.08 ® TÜV, TUEV and TUV are registered trademarks. Utilisation and application requires prior approval.

Zertifikat *Certificate*

TÜVRheinland®

Zertifikat Nr. *Certificate No.*
R 50499828

Blatt *Sheet*
0001

Ihr Zeichen *Client Reference*	Unser Zeichen *Our Reference*	Ausstellungsdatum *Date of Issue*
EISBG-102P-202007025	ZTW1-BLL-CN20H5H5 001	08.04.2021 *(day/mo/yr)*

Genehmigungsinhaber *License Holder*
Delta Electronics, Inc.
3, Tungyuan Road,
Chungli Industrial Zone,
Taoyuan City 32063
Taiwan

Fertigungsstätte *Manufacturing Plant*
Refer to latest revision
of the annex list of factories

Prüfzeichen *Test Mark*

TÜVRheinland® ZERTIFIZIERT
Bauart geprüft
Sicherheit
Regelmäßige Produktions-überwachung
www.tuv.com
ID 1111238210

Geprüft nach *Tested acc. to*
EN 60335-1:2012+A11+A13+A1+A14+A2

Zertifiziertes Produkt (Geräteidentifikation)
Certified Product (Product Identification)

Lizenzentgelte - Einheit
License Fee - Unit

Einbau-Schaltnetzteil (SWITCHING POWER SUPPLY)

Bezeichnung (Type Designation)	:	MEU-650A24T
Nennspannung (Rated Voltage)	:	1) AC 100-120V, 50-60Hz 2) AC 200-240V, 50-60Hz
Nennstrom (Rated Current)	:	8A Max.
Ausgänge (Output)	:	siehe Anlage (see Appendix)
Schutzklasse (Protection Class)	:	I
Max. Umgebungstemperatur (Max. Ambient Temperature)	:	50°C (full 100% load) 70°C (de-rating 50% load)
Max. Betriebshöhe (Max. Operating Altitude)	:	5000m

ANLAGE (Appendix): 1.0

Dem Zertifikat liegt unsere Prüf- und Zertifizierungsordnung zugrunde und es bestätigt die Konformität des Produktes mit den oben genannten Standards und Prüfgrundlagen. Zusätzliche Anforderungen in Ländern, in denen das Produkt in Verkehr gebracht werden soll, müssen zusätzlich betrachtet werden. Die Herstellung des zertifizierten Produktes wird überwacht.
This certificate is based on our Testing and Certification Regulation and states the conformity of the product with the standards and testing requirements as indicated above. Any additional requirements in countries where the product is going to be marketed have to be considered additionally. The manufacturing of the certified product is subject to surveillance.

TÜV Rheinland LGA Products GmbH, Tillystraße 2, 90431 Nürnberg
Tel.: +49 221 806-1371 e-mail: cert-validity@de.tuv.com
Fax: +49 221 806-3935 http://www.tuv.com/safety

TÜV Rheinland LGA Products GmbH TÜVRheinland® Zertifizierungsstelle

Zertifizierungsstelle

Dipl.-Ing. Th. Illing

10/020 d 04.08 ® TÜV, TUEV and TUV are registered trademarks. Utilisation and application requires prior approval.

Anlage Fertigungsstättenliste
/Attachment List of Factories

TÜVRheinland®

R 50499828 0001

1 Delta Electronics (Thailand) Public Co., Ltd.
909 Soi 9 Moo 4, Bangpoo Industrial Estate (E.P.Z.), Pattana 1 Road,
Tambol Phraksa, Amphur Muang,
Samutprakarn 10280
Thailand

2 Delta Electronics (Jiangsu) Ltd.
215200, No.1688, Jiangxing East Road,
Wujiang Economic and Technological Development Zone
Suzhou City, Jiangsu Province
P.R. China

3 Delta Electronics Power (Dongguan) Co., Ltd.
Delta Industrial Estate
Xincheng District, Shijie Town
Dongguan, Guangdong 523308
P.R. China

Dieser Anhang ersetzt den Vorgänger vom/
This annex replaces the previous annex dated

Datum / Date 08.04.2021

TÜV Rheinland LGA Products GmbH
TÜVRheinland®
Zertifizierungsstelle

Zertifizierungsstelle
/ Certification Body

Dipl.-Ing. Th. Illing

10/020 d 04.08 ® TÜV, TUEV and TUV are registered trademarks. Utilisation and application requires prior approval.

CERTIFICATE OF COMPLIANCE

Certificate Number	UL-US-2021382-0
Report Reference	E131881-A6561-UL
Date	21-Apr-2021
Issued to:	DELTA ELECTRONICS INC 3 Tungyuan Road Chungli Industrial Zone Taoyuan City Taiwan 32063
This is to certify that representative samples of	QQJQ2 - Power Supplies for Use with Audio/Video, Information and Communication Technology Equipment - Component See Addendum Page for Product Designation(s). Have been investigated by UL in accordance with the component requirements in the Standard(s) indicated on this Certificate. UL Recognized components are incomplete in certain constructional features or restricted in performance capabilities and are intended for installation in complete equipment submitted for investigation to UL LLC.
Standard(s) for Safety:	UL 62368-1, 2nd Ed., Issue Date: 2014-12-01
Additional Information:	See the UL Online Certifications Directory at https://iq.ulprospector.com for additional information

This *Certificate of Compliance* does not provide authorization to apply the UL Recognized Component Mark. Only the UL Follow-Up Services Procedure provides authorization to apply the UL Mark.

Only those products bearing the UL Recognized Component Mark should be considered as being UL Certified and covered under UL's Follow-Up Services.

Look for the UL Recognized Component Mark on the product.

Bruce Mahrenholz, Director North American Certification Program

UL LLC

Any information and documentation involving UL Mark services are provided on behalf of UL LLC (UL) or any authorized licensee of UL. For questions, please contact a local UL Customer Service Representative at http://ul.com/aboutul/locations/

CERTIFICATE OF COMPLIANCE

Certificate Number UL-US-2021382-0
Report Reference E131881-A6561-UL
Date 21-Apr-2021

This is to certify that representative samples of the product as specified on this certificate were tested according to the current UL requirements

Model	Category Description
MEU-650A24T	SWITCHING POWER SUPPLY

Bruce Mahrenholz, Director North American Certification Program

UL LLC

Any information and documentation involving UL Mark services are provided on behalf of UL LLC (UL) or any authorized licensee of UL. For questions, please contact a local UL Customer Service Representative at http://ul.com/aboutul/locations/

CERTIFICATE OF COMPLIANCE

Certificate Number	UL-CA-2017453-0
Report Reference	E131881-A6561-UL
Date	21-Apr-2021

Issued to:

DELTA ELECTRONICS INC
3 Tungyuan Road
Chungli Industrial Zone Taoyuan City
Taiwan 32063

This is to certify that representative samples of

QQJQ8 - Power Supplies for Use with Audio/Video, Information and Communication Technology Equipment Certified for Canada - Component

See Addendum Page for Product Designation(s).

Have been investigated by UL in accordance with the component requirements in the Standard(s) indicated on this Certificate. UL Recognized components are incomplete in certain constructional features or restricted in performance capabilities and are intended for installation in complete equipment submitted for investigation to UL LLC.

Standard(s) for Safety: CSA C22.2 NO. 62368-1-14, 2nd Ed., Issue Date: 2014-12-01

Additional Information: See the UL Online Certifications Directory at https://iq.ulprospector.com for additional information

This *Certificate of Compliance* does not provide authorization to apply the UL Recognized Component Mark. Only the UL Follow-Up Services Procedure provides authorization to apply the UL Mark.

Only those products bearing the UL Recognized Component Mark should be considered as being UL Certified and covered under UL's Follow-Up Services.

Look for the UL Recognized Component Mark on the product.

Bruce Mahrenholz, Director North American Certification Program

UL LLC

Any information and documentation involving UL Mark services are provided on behalf of UL LLC (UL) or any authorized licensee of UL. For questions, please contact a local UL Customer Service Representative at http://ul.com/aboutul/locations/

CERTIFICATE OF COMPLIANCE

Certificate Number UL-CA-2017453-0
Report Reference E131881-A6561-UL
Date 21-Apr-2021

This is to certify that representative samples of the product as specified on this certificate were tested according to the current UL requirements

Model	Category Description
MEU-650A24T	SWITCHING POWER SUPPLY

Bruce Mahrenholz, Director North American Certification Program

UL LLC

Any information and documentation involving UL Mark services are provided on behalf of UL LLC (UL) or any authorized licensee of UL. For questions, please contact a local UL Customer Service Representative at http://ul.com/aboutul/locations/

Attention

Delta provides all information in the datasheets on an “AS IS” basis and does not offer any kind of warranty through the information for using the product. In the event of any discrepancy between the information in the catalog and datasheets, the datasheets shall prevail (please refer to www.DeltaPSU.com for the latest datasheets information). Delta shall have no liability of indemnification for any claim or action arising from any error for the provided information in the datasheets. Customer shall take its responsibility for evaluation of using the product before placing an order with Delta.

Delta reserves the right to make changes to the information described in the datasheets without notice.

声明

台达以实际测试数据为基础提供数据表中所有参数，但对于产品使用不通过任何形式的保证。如果目录中的信息与数据表中的信息不一致时，以数据表为准（最新的数据表信息请参考 www.DeltaPSU.cn）对于数据表中提供的错误信息而引起的任何索赔或诉讼，台达不承担赔偿责任。客户在向台达下单前，应对产品的使用情况进行评估。

台达保留对数据表中描述的信息进行更改而不另行通知的权利。

聲明

台達以實際測試數據為基礎提供數據表中所有參數，但對於產品使用不通過任何形式的保證。如果目錄中的信息與數據表中的信息不一致時，以數據表為準（最新的數據表信息請參考 www.DeltaPSU.com）對於數據表中提供的錯誤信息而引起的任何索賠或訴訟，台達不承擔賠償責任。客戶在向台達下單前，應對產品的使用情況進行評估。

台達保留對數據表中描述的信息進行更改而不另行通知的權利。