Application Note: SY8308

High Efficiency, 8.0A 40V Input Synchronous Step Down Regulator

General Description

The SY8308 develops a high efficiency synchronous step-down DC/DC regulator capable of delivering 8A continuous current. The device integrates main switch and synchronous switch with very low $R_{DS(ON)}$ to minimize the conduction loss.

The SY8308 operates over a wide input voltage range from 4V to 40V. The device adopts the instant PWM architecture to achieve fast transient responses for high step down applications and high efficiency at light loads.

Ordering Information

SY8308 □(□□)□
- Temperature Code
- Package Code
- Optional Spec Code

Ordering Number	Package type	Note
SY8308RBC	QFN3.5×3.5-20	--

Features

- Low $R_{DS(ON)}$ for Internal Switches (Top/Bottom):25mΩ/12mΩ
- 4~40V Input Voltage Range
- 8.0A Output Current Capability
- Selectable 350 kHz/500kHz Switching Frequency
- PFM/PWM Selectable Light Load Operation Mode
- Instant PWM Architecture to Achieve Fast Transient Responses.
- Programmable Soft-start Limits the Inrush Current
- Programmable Valley Current Limit Threshold
- Hic-cup Mode Output Short Circuit Protection
- Power Good Indicator
- 0.6V ±1% Reference Voltage
- Compact Package: QFN3.5×3.5-20

Applications

- LCD-TV
- SetTop Box
- Notebook
- Storage
- High Power AP Router
- Networking

Silergy Corp. Confidential Prepared For Qisda

Typical Applications

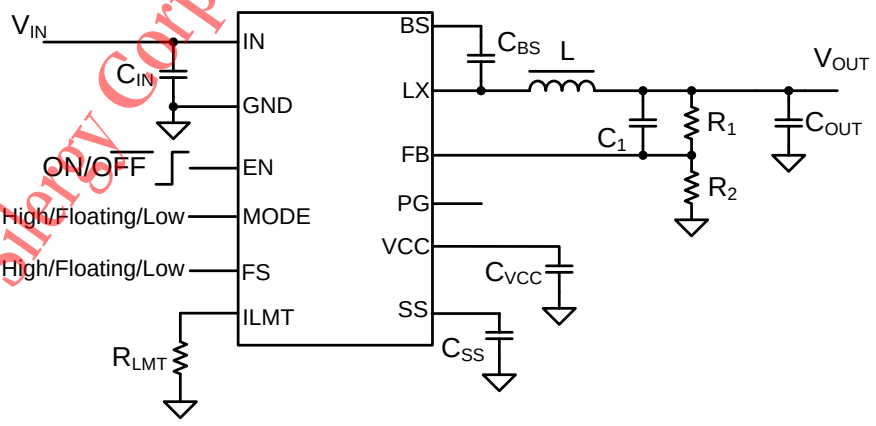

Figure1. Schematic Diagram

© 2020 Silergy Corp. All Rights Reserved.

Pinout (top view)

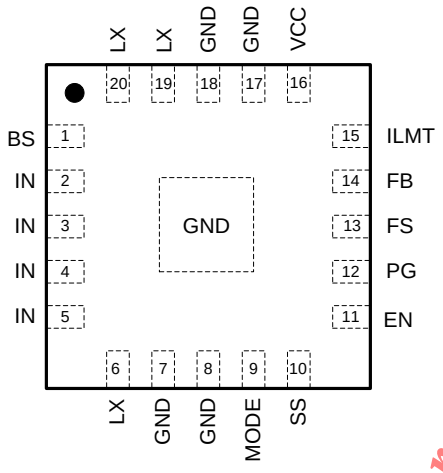

(QFN3.5×3.5-20)

Top Mark: BDY*xyz*, **(**Device code: BDY, ***x=year code, y=week code, z= lot number code***)

Pin Name	Pin Number	Pin Description
BS	1	Boot-strap pin. Supply high side gate driver. Connect a 0.1μF ceramic capacitor between the BS and the LX pin.
IN	2,3,4,5	Input pin. Decouple this pin to the GND pin with at least a 10μF ceramic capacitor.
LX	6,19,20	Inductor pin. Connect this pin to the switching node of the inductor.
GND	7,8,17,18, Exposed pad	Ground pin.
MODE	9	Operating mode selection under light load. Pull this pin low for PFM operating; pull this pin high or floating for PWM operation.
SS	10	Soft-start programming pin. Connect a capacitor from this pin to ground to program the soft-start time. t_{ss}(ms)=Css(nF)×0.6V/6μA. Leave this pin open for default 1ms soft-start.
EN	11	Enable control. Pull high to turn on. Do not leave it floating.
PG	12	Power good indicator. Open-drain output when the output voltage is within 85% to 122% of regulation point.
FS	13	Switching frequency selection. Pull this pin low for 350kHz; pull this pin high or floating for 500kHz.
FB	14	Output feedback pin. Connect this pin to the center point of the output resistor divider (as shown in Figure 1) to program the output voltage: $V_{OUT}=0.6\times(1+R_1/R_2)$.
ILMT	15	Valley current limit programming. I_{LMT_VALLEY}(A)=3600/R_{LMT}(kΩ). Leave this pin open for default 6A valley current limit threshold.
VCC	16	Internal 3.3V output. Decouple this pin to ground with at least a 4.7μF capacitor.

Silergy Corp. Confidential Prepared For Qisda

© 2020 Silergy Corp. All Rights Reserved.

Block Diagram

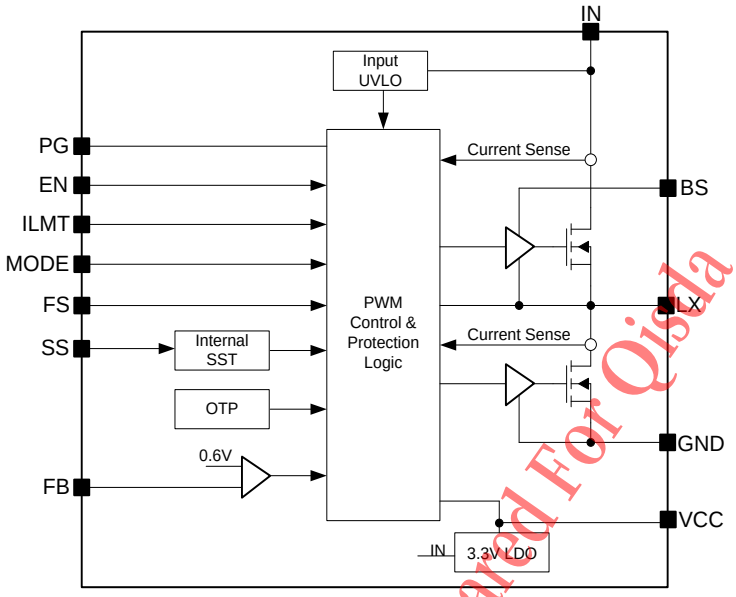

Figure2. Block Diagram

Absolute Maximum Ratings (Note 1)

Supply Input Voltage ---------- -0.3V to 40V
BS-LX, VCC, FB Voltage---------- -0.3V to 4V
LIMT, FS, PG, EN, MODE, SS, LX Voltage---------- -0.3V to VIN + 0.3V
Power Dissipation, P_D @ T_A = 25℃, QFN3.5×3.5-20 ---------- 3.6W
Package Thermal Resistance (Note 2)
Θ_{JA} ---------- 28℃/W
Θ_{JC} ----------4℃/W
Junction Temperature Range ---------- -40℃ to 150℃
Lead Temperature (Soldering, 10 sec.) ---------- 260℃
Storage Temperature Range ---------- -65℃ to 150℃
Dynamic LX voltage in 10ns duration ---------- IN+3V to GND-5V

Recommended Operating Conditions (Note 3)

Supply Input Voltage ---------- 4V to 40V
Junction Temperature Range ---------- -40℃ to 125℃

Silergy Corp. Confidential Prepared For Qisda

© 2020 Silergy Corp. All Rights Reserved.

Electrical Characteristics

(V_{IN} = 12V, T_A = 25℃, I_{OUT} = 1A, unless otherwise specified)

Parameter	Symbol	Test Conditions	Min	Typ	Max	Unit
Input Voltage Range	V_{IN}		4		40	V
Input UVLO Threshold	V_{UVLO}				3.9	V
Input UVLO Hysteresis	V_{HYS}			0.3		V
Quiescent Current	I_Q	I_{OUT}=0, V_{FB}=V_{REF}×105%		60		μA
Shutdown Current	I_{SHDN}	EN=0			4	μA
Feedback Reference Voltage	V_{REF}		0.594	0.6	0.606	V
FB Input Current	I_{FB}	V_{FB}=3.3V	-50		50	nA
Top FET RON	$R_{DS(ON)1}$			25		mΩ
Bottom FET RON	$R_{DS(ON)2}$			12		mΩ
Bottom FET Valley Current Limit Program Range	$I_{LMT,RNG}$	R_{LMT}=300kΩ~600kΩ	6		12	A
Bottom FET Valley Current Limit Setting Accuracy	I_{LMT}	R_{LMT}=300kΩ	9.6	12	14.4	A
Bottom FET Reverse Current Limit	$I_{LMT,RVS}$	MODE=High	3.5			A
EN Input Voltage High	$V_{EN,H}$		1.5			V
EN Input Voltage Low	$V_{EN,L}$				0.4	V
EN Leakage Current	I_{EN}				1	μA
MODE Input Voltage High	$V_{MODE,H}$		V_{CC}-0.8			V
MODE Input Voltage High	$V_{MODE,L}$				0.4	V
MODE Leakage Current	I_{MODE}				1	μA
FS Input Voltage High	$V_{FS,H}$		V_{CC}-0.8			V
FS Input Voltage High	$V_{FS,L}$				0.4	V
FS Leakage Current	I_{FS}				1	μA
Power Good Threshold	$V_{PG,TH}$	V_{FB} falling, PG from high to low	81	85	89	%V_{REF}
		V_{FB} rising, PG from low to high	85	90	95	%V_{REF}
		V_{FB} falling, PG from low to high	104	110	116	%V_{REF}
		V_{FB} rising, PG from high to low	116	122	128	%V_{REF}
Power Good Delay	$t_{PG,DLY}$	Low to high		200		μs
		High to low		10		μs
Power Good Low Voltage	V_{PG_LOW}	Sink 5mA to PG pin, FB=0.6V			0.4	V
Soft-start Charging Current	I_{SS}			6		μA
Internal Soft-start Time	t_{SS}	SS floating		1		ms
Output Over Voltage Threshold	V_{OVP}	V_{FB} rising	116	122	128	%V_{REF}
Output Over Voltage Hysteresis	$V_{OVP,HYS}$			10		%V_{REF}
Output OVP Delay	$t_{OVP,DLY}$			15		μs
Output Under Voltage Protection Threshold	$V_{OUT,UVP}$	V_{FB} falling	45	50	55	%V_{REF}
Output UVP Delay	$t_{UVP,DLY}$			200		μs
UVP Hic-cup ON Time	$t_{UVP,ON}$	SS floating		3		ms
UVP Hic-cup OFF Time	$t_{UVP,OFF}$	SS floating		21		ms
Switching Frequency	f_{SW}	FS=Floating, CCM	400	500	600	kHz
VCC Output Voltage	V_{VCC}		3.15	3.3	3.45	V

Silergy Corp. Confidential Prepared For Qisda

© 2020 Silergy Corp. All Rights Reserved.

Parameter	Symbol	Test Conditions	Min	Typ	Max	Unit
Min ON Time	$t_{ON,MIN}$			80		ns
Min OFF Time	$t_{OFF,MIN}$			160		ns
Thermal Shutdown Temperature	T_{SD}			150		℃
Thermal Shutdown Hysteresis	T_{HYS}			15		℃

Note 1: Stresses beyond the "Absolute Maximum Ratings" may cause permanent damage to the device. These are stress ratings only. Functional operation of the device at these or any other conditions beyond those indicated in the operational sections of the specification is not implied. Exposure to absolute maximum rating conditions for extended periods may affect device reliability.

Note 2: Package thermal resistance is measured in the natural convection at T_A = 25℃ on a four-layer Silergy Evaluation Board.

Note 3: The device is not guaranteed to function outside its operating conditions.

Silergy Corp. Confidential Prepared For Qisda

© 2020 Silergy Corp. All Rights Reserved.

Typical Performance Characteristics

(fsw=500kHz, T_A = 25℃)

Efficiency vs. Output Current
(V_{OUT}=5V, MODE=Low, L=2.2μH/PCMB104T-2R2MS)

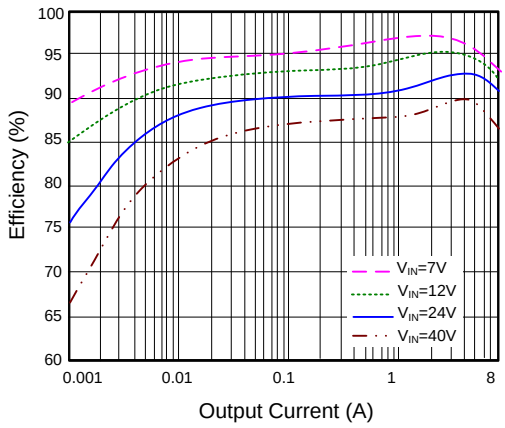

Efficiency vs. Output Current
(V_{OUT}=5V, MODE=High, L=2.2μH/PCMB104T-2R2MS)

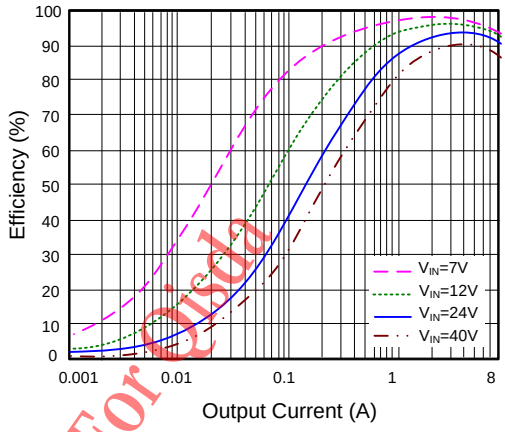

Efficiency vs. Output Current
(V_{OUT}=3.3V, MODE=Low, L=1.5μH/PCMB104T-1R5MS)

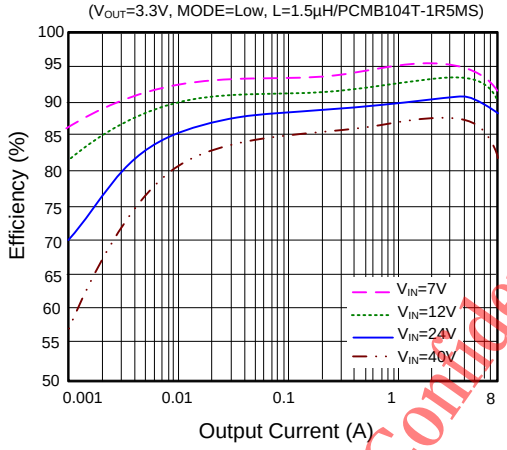

Efficiency vs. Output Current
(V_{OUT}=3.3V, MODE=High, L=1.5μH/PCMB104T-1R5MS)

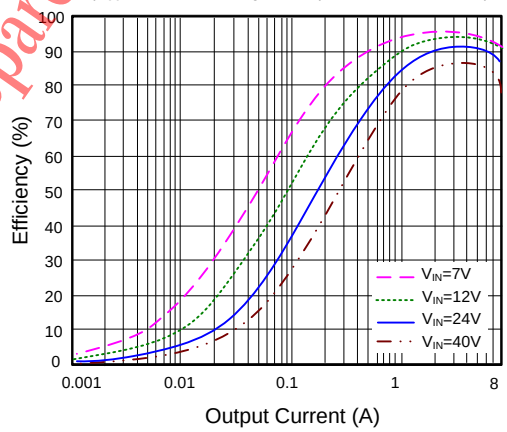

Efficiency vs. Output Current
(V_{OUT}=1.8V, MODE=Low, L=1.0μH/PCMB104T-1R0MS)

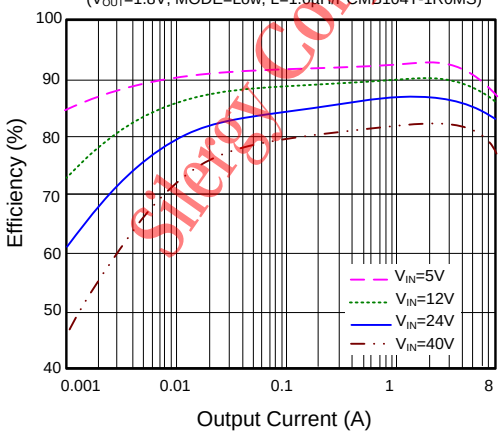

Efficiency vs. Output Current
(V_{OUT}=1.8V, MODE=High, L=1.0μH/PCMB104T-1R0MS)

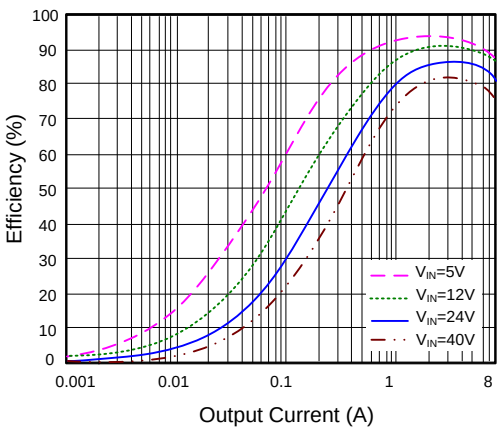

Silergy Corp. Confidential Prepared For @sda

© 2020 Silergy Corp. All Rights Reserved.

Efficiency vs. Output Current

(V_{OUT}=1.2V, MODE=Low, L=1.0μH/PCMB104T-1R0MS)

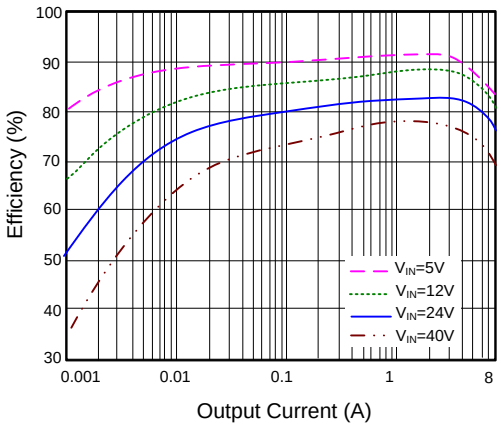

Efficiency vs. Output Current

(V_{OUT}=1.2V, MODE=High, L=1.0μH/PCMB104T-1R0MS)

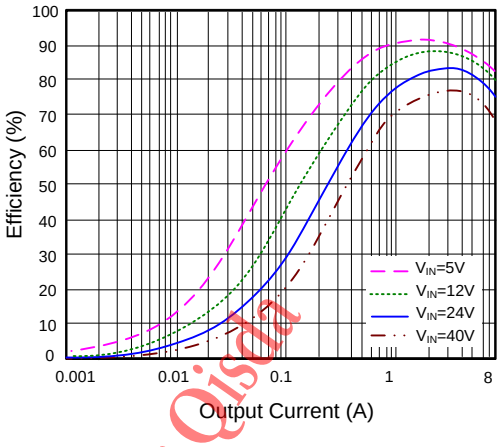

Load Transient

(V_{IN}=12V, V_{OUT}=5V, I_{OUT}=0.8A ~ 8A)

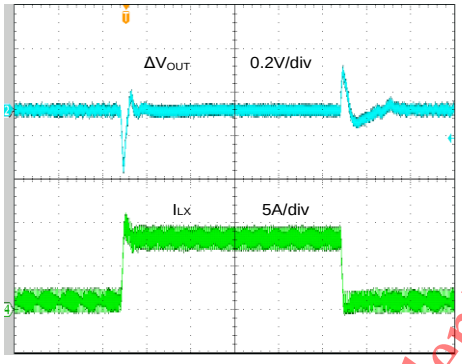

Time (100μs/div)

Output Ripple

(V_{IN}=12V, V_{OUT}=5V, I_{OUT}= 0A, Mode=Low)

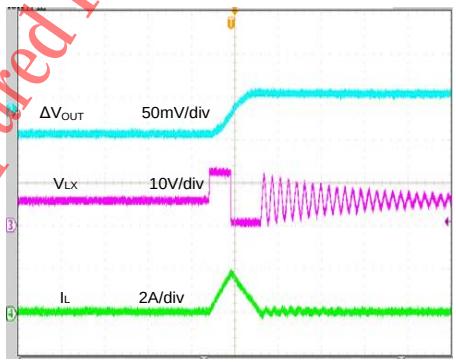

Time (2μs/div)

Output Ripple

(V_{IN}=12V, V_{OUT}=5V, I_{OUT}= 8A)

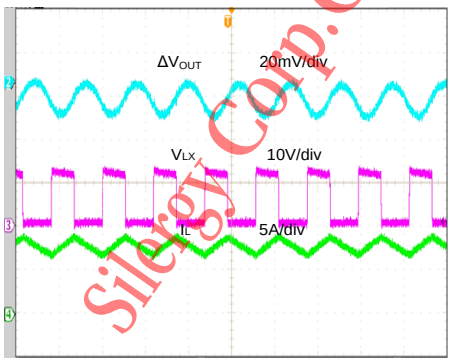

Time (2μs/div)

Output Ripple

(V_{IN}=12V, V_{OUT}=5V, I_{OUT}= 0A, Mode=High)

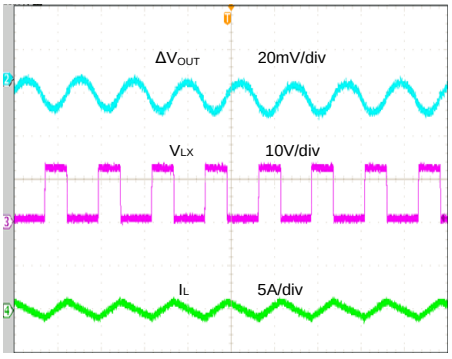

Time (2μs/div)

Silergy Corp. Confidential Prepared For Qisda

© 2020 Silergy Corp. All Rights Reserved.

Startup from V_{IN}

(V_{IN}=12V, V_{OUT}=5V, I_{OUT}=8A)

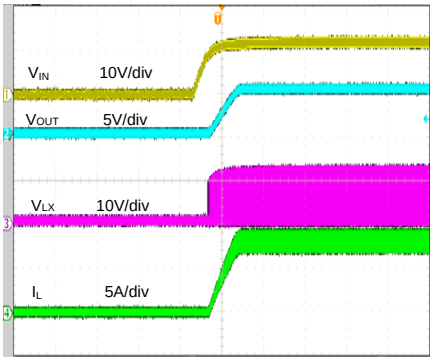

Time (2ms/div)

Shutdown from V_{IN}

(V_{IN}=12V, V_{OUT}=5V, I_{OUT}=8A)

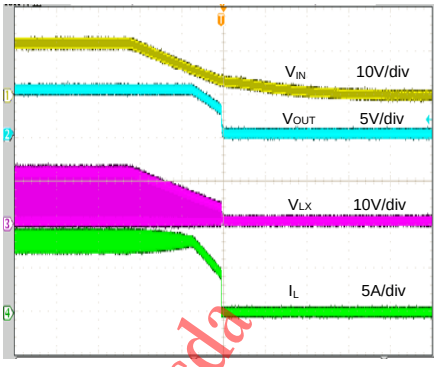

Time (4ms/div)

Startup from Enable

(V_{IN}=12V, V_{OUT}=5V, I_{OUT}=8A)

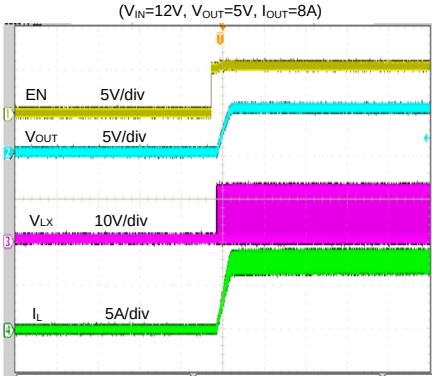

Time (4ms/div)

Shutdown from Enable

(V_{IN}=12V, V_{OUT}=5V, I_{OUT}=8A)

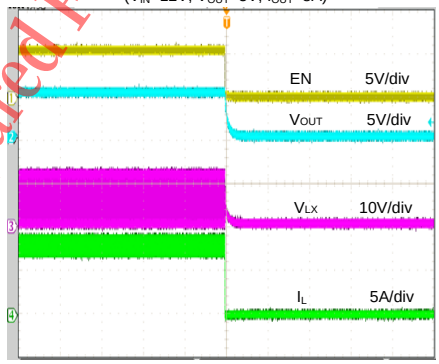

Time (800µs/div)

Short Circuit Protection

(V_{IN}=12V, V_{OUT}=5V, 0A to Short)

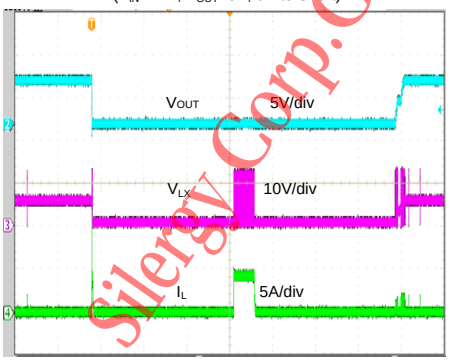

Time (10ms/div)

Short Circuit Protection

(V_{IN}=12V, V_{OUT}=5V, 8A to Short)

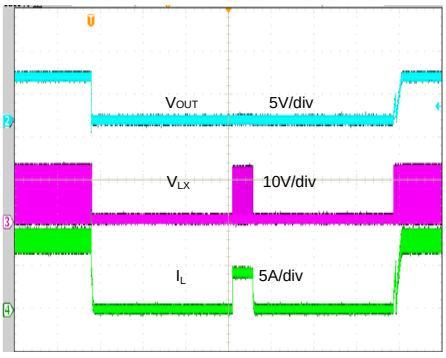

Time (10ms/div)

Silergy Corp. Confidential Prepared For Qisda

© 2020 Silergy Corp. All Rights Reserved.

Operation

The SY8308 develops a high efficiency synchronous step-down DC/DC regulator capable of delivering 8A current. The device integrates a main switch and a synchronous switch with very low $R_{DS(ON)}$ to minimize the conduction loss.

The SY8308 operates over a wide input voltage range from 4V to 40V. The DC/DC regulator adopts the instant PWM architecture to achieve fast transient responses for high step down applications and high efficiency at light load. The device provides various protection features for reliable operation.

Applications Information

Because of the high integration in the SY8308, the application circuit based on this regulator is rather simple. Only the input capacitor C_{IN}, the output capacitor C_{OUT}, the output inductor L and the feedback resistors (R_1 and R_2) need to be selected for the targeted applications specifications.

Feedback Resistor Dividers R_1 and R_2

Choose R_1 and R_2 to program the proper output voltage. To minimize the power consumption under light load, it is desirable to choose large resistance values for both R_1 and R_2. A value of between 10kΩ and 1MΩ is highly recommended for both resistors. If V_{OUT} is 1.2V, R_1=100kΩ is chosen, then using the following equation, R_2 can be calculated to be 100kΩ:

$$R_2 = \frac{0.6V}{V_{OUT}-0.6V} \times R_1 .$$

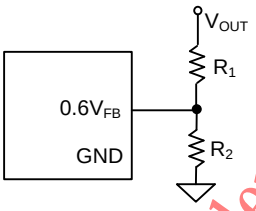

Input Capacitor C_{IN}

The ripple current through input capacitor is calculated as:

$$I_{CIN_RMS} = I_{OUT} \times \sqrt{D \times (1-D)}$$

To minimize the potential noise problem, place a typical X5R or better grade ceramic capacitor really close to the IN and GND pins. Care should be taken to minimize the loop area formed by C_{IN}, and IN/GND pins. In this case, a 10µF low ESR ceramic capacitor is recommended.

Output Capacitor C_{OUT}

The output capacitor is selected to handle the output ripple noise requirements. Both steady state ripple and transient requirements must be taken into consideration when selecting this capacitor. For most applications, an X5R or better grade ceramic capacitor larger than 66µF capacitance can work well. The capacitance derating with DC voltage must be considered.

Output Inductor L

There are several considerations in choosing this inductor.

1) Choose the inductance to provide the desired ripple current. It is suggested to choose the ripple current to be about 40% of the maximum output current. The inductance is calculated as:

$$L = \frac{V_{OUT}(1-V_{OUT}/V_{IN,MAX})}{f_{SW} \times I_{OUT,MAX} \times 40\%}$$

where fsw is the switching frequency and $I_{OUT,MAX}$ is the maximum load current.

The SY8308 is quite tolerant of different ripple current amplitude. Consequently, the final choice of inductance can be slightly off the calculation value without significantly impacting the performance.

2) The saturation current rating of the inductor must be selected to be greater than the peak inductor current under full load condition.

$$I_{SAT,MIN} > I_{OUT,MAX} + \frac{V_{OUT}(1-V_{OUT}/V_{IN,MAX})}{2 \times f_{SW} \times L}$$

3) The DCR of the inductor and the core loss at the switching frequency must be low enough to achieve the desired efficiency requirement. It is desirable to choose an inductor with DCR<10mΩ to achieve a good overall efficiency.

Enable Operation

Pulling the EN pin low will shut down the device. During shutdown mode, the SY8308 shutdown current drops to lower than 4µA. Driving the EN pin high will turn on the IC again.

Silergy Corp. Confidential Prepared For Qisda

© 2020 Silergy Corp. All Rights Reserved.

Soft-start

The SY8308 provides programmable soft-start time feature. The minimum soft-start time is 1ms typically when SS pin is floating. Connect a capacitor across the SS pin and GND to program the soft-start time.

$$tss(ms) = Css(nF) \times \frac{0.6(V)}{6(\mu A)}$$

External Bootstrap Capacitor

This capacitor provides the gate driver voltage for internal high side MOSEFET. A 100nF low ESR ceramic capacitor connected between the BS pin and the LX pin is recommended.

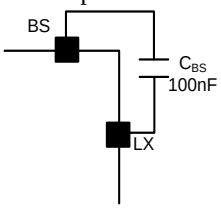

VCC LDO

The 3.3V VCC LDO provides the power supply for internal control circuit. Bypass this pin to ground with a 4.7μF ceramic capacitor.

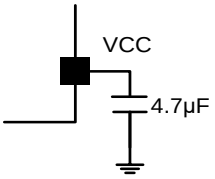

Power Good Indication

PG is an open-drain output pin. This pin will pull to ground if output voltage is lower than 85% or higher than 122% of the regulation voltage. Otherwise this pin will go to a high impedance state.

Switching Frequency Select

350kHz or 500kHz switching frequency can be selected by the FS pin. Pull this pin low for 350kHz; pull this pin high or floating for 500kHz.

Light Load Operation Mode Selection

PFM or PWM light load operation is selected by the MODE pin. Pull the MODE pin low for PFM operation, and pull this pin high or floating for PWM operation.

Load Transient Considerations

The SY8308 adopts the instant PWM architecture to achieve good stability and fast transient responses. In applications with high step load current, adding an RC network R_{FF} and C_{FF} parallel with R_1 may further speed up the load transient responses. R_{FF} = 1kΩ and C_{FF} = 470pF have shown to perform well in most applications.

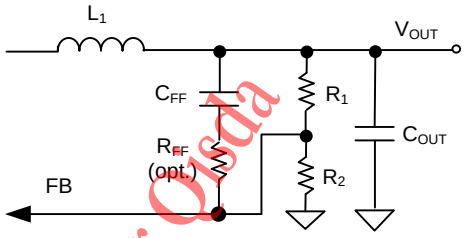

Over-current Protection (OCP)

SY8308 incorporates a cycle-by-cycle valley current limit. Inductor current is measured in the synchronous rectifier when it is on and as the inductor current ramps down. If the current exceeds the current limit, HS FET turn-on is inhibited until the current returns to safe levels.

The valley current limit can be programmed with a resistor R_{LMT} connecting from ILMT pin to ground:

$$I_{LMT_VALLEY}(A) = \frac{3600}{R_{LMT}(k\Omega)}$$

Short-circuit protection (SCP)

If VOUT < 50% of the set-point continuously for approximately 200μs, the short-circuit protection mode will be initiated, and the device will shut down for 21 soft-start time. The device will then restart and keep working for 3 soft-start time. If the short circuit condition remains, another 'hiccup' cycle of shutdown and restart will continue indefinitely.

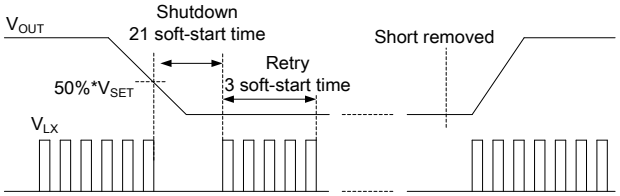

Silergy Corp Confidential Prepared for Qisda

© 2020 Silergy Corp. All Rights Reserved.

Over-temperature Protection (OTP)

The device includes over-temperature protection (OTP) circuitry to prevent overheating due to excessive power dissipation. This will shut down switching operation when the junction temperature exceeds 150℃. Once the junction temperature cools down by approximately 15℃ the IC will resume normal operation after a complete soft-start cycle. For continuous operation, provide adequate cooling so that the junction temperature does not exceed the OTP threshold.

Layout Design

The layout design of SY8308 is relatively simple. For the best efficiency and minimum noise problem, the following components should be close to the IC: C_{IN}, C_{VCC}, L, R_1 and R_2.

1) It is desirable to maximize the PCB copper area connecting to the GND pin to achieve the best thermal and noise performance. If the board space allows, a ground plane is highly desirable.

2) C_{IN} must be close to the IN and GND pins. The loop area formed by C_{IN} and GND must be minimized.

3) The PCB copper area associated with the LX pin must be minimized to avoid the potential noise problem.

4) The components R_1 and R_2 and the trace connecting to the FB pin must NOT be adjacent to the LX net on the PCB layout to avoid the noise problem.

5) If the system chip interfacing with the EN pin has a high impedance state at shutdown mode and the IN pin is connected directly to a power source such as a Li-Ion battery. A 1MΩ pull down resistor should be placed between the EN and GND pins to prevent the noise from falsely turning on the regulator at shutdown mode.

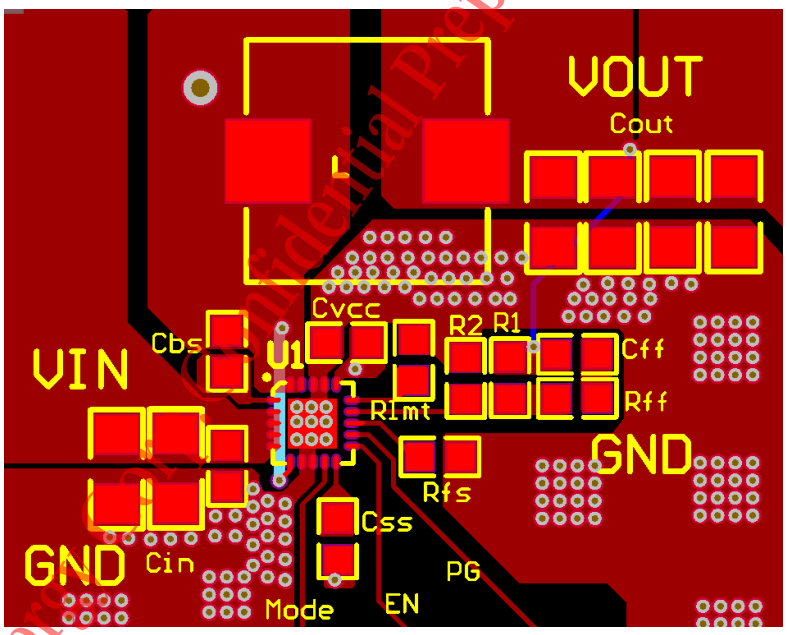

Figure3. PCB Layout Suggestion

Silergy Corp. Confidential Prepared for Qisda

© 2020 Silergy Corp. All Rights Reserved.

QFN3.5×3.5-20 Package Outline

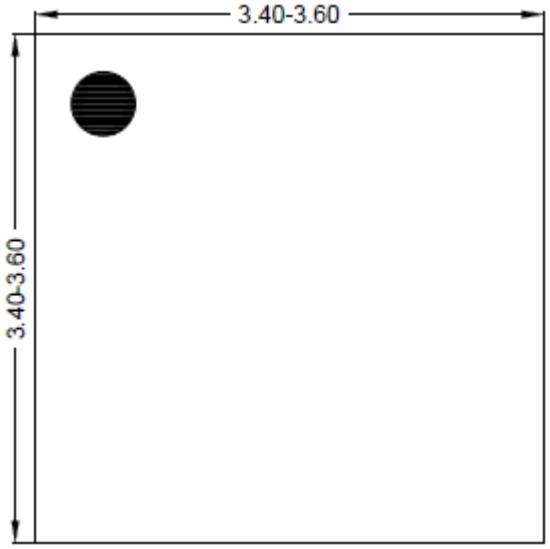

Top view

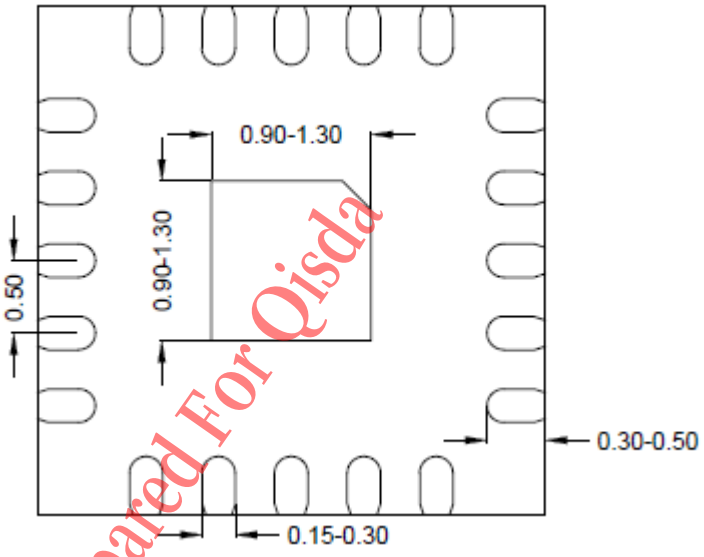

Bottom view

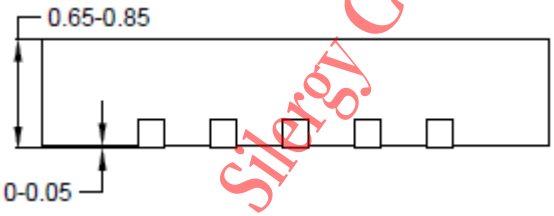

Side view

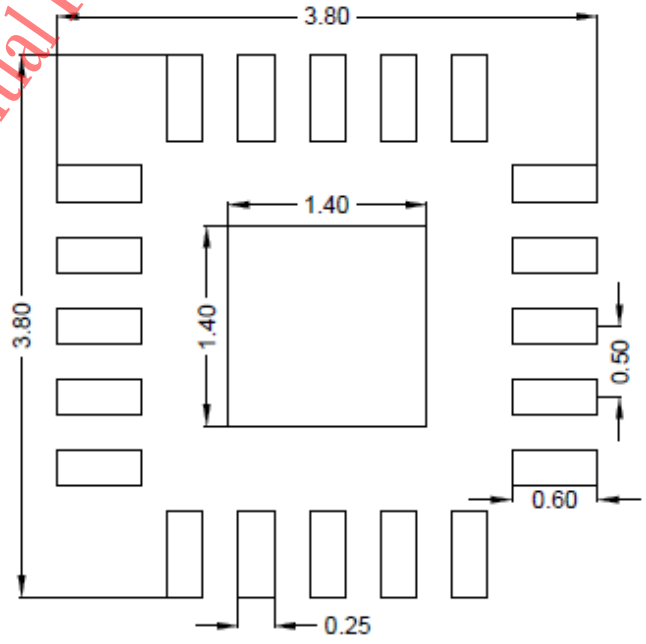

Recommended PCB layout
(Reference only)

Notes: **All dimension in millimeter and exclude mold flash & metal burr.**

Silergy Corp. Confidential Prepared For Qisda

© 2020 Silergy Corp. All Rights Reserved.

Taping & Reel Specification

1. QFN3.5×3.5-20 taping orientation

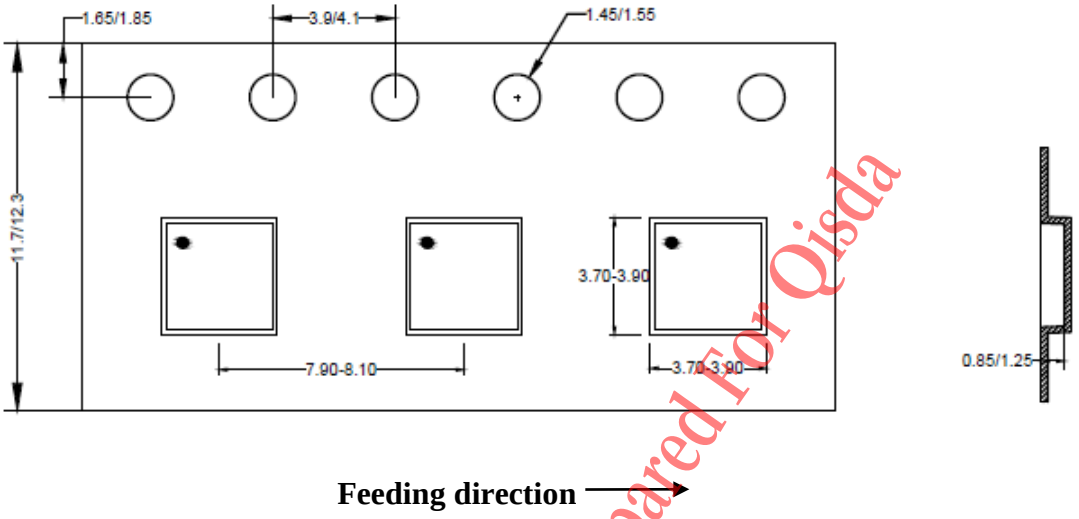

Feeding direction →

2. Carrier Tape & Reel specification for packages

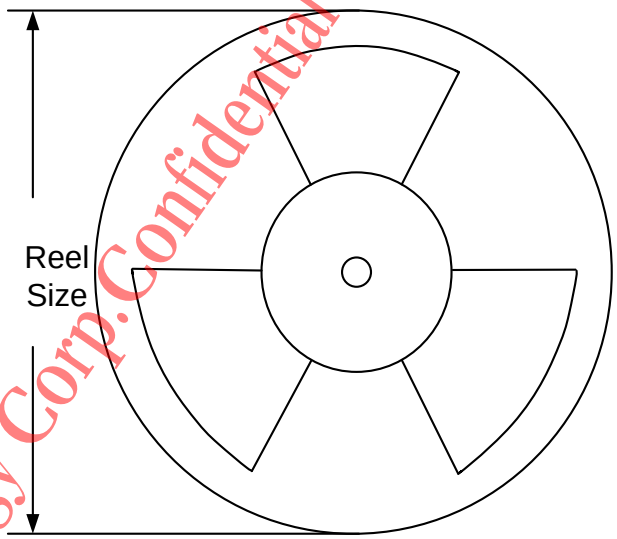

Package types	Tape width (mm)	Pocket pitch(mm)	Reel size (Inch)	Trailer length(mm)	Leader length (mm)	Qty per reel
QFN3.5×3.5	12	8	13"	400	400	3000

3. Others: NA

Silergy Corp. Confidential Prepared For Qisda

© 2020 Silergy Corp. All Rights Reserved.

Revision History

The revision history provided is for informational purpose only and is believed to be accurate, however, not warranted. Please make sure that you have the latest revision.

Date	Revision	Change
Nov.25, 2020	Revision 0.9	Initial Release

Silergy Corp. Confidential Prepared For Qisda

© 2020 Silergy Corp. All Rights Reserved.

IMPORTANT NOTICE

1. **Right to make changes.** Silergy and its subsidiaries (hereafter Silergy) reserve the right to change any information published in this document, including but not limited to circuitry, specification and/or product design, manufacturing or descriptions, at any time and without notice. This document supersedes and replaces all information supplied prior to the publication hereof. Buyers should obtain the latest relevant information before placing orders and should verify that such information is current and complete. All semiconductor products are sold subject to Silergy's standard terms and conditions of sale.

2. Applications. Application examples that are described herein for any of these products are for illustrative purposes only. Silergy makes no representation or warranty that such applications will be suitable for the specified use without further testing or modification. Buyers are responsible for the design and operation of their applications and products using Silergy products. Silergy or its subsidiaries assume no liability for any application assistance or designs of customer products. It is customer's sole responsibility to determine whether the Silergy product is suitable and fit for the customer's applications and products planned. To minimize the risks associated with customer's products and applications, customer should provide adequate design and operating safeguards. Customer represents and agrees that it has all the necessary expertise to create and implement safeguards which anticipate dangerous consequences of failures, monitor failures and their consequences, lessen the likelihood of failures that might cause harm and take appropriate remedial actions. Silergy assumes no liability related to any default, damage, costs or problem in the customer's applications or products, or the application or use by customer's third-party buyers. Customer will fully indemnify Silergy, its subsidiaries, and their representatives against any damages arising out of the use of any Silergy components in safety-critical applications. It is also buyers' sole responsibility to warrant and guarantee that any intellectual property rights of a third party are not infringed upon when integrating Silergy products into any application. Silergy assumes no responsibility for any said applications or for any use of any circuitry other than circuitry entirely embodied in a Silergy product.

3. **Limited warranty and liability.** Information furnished by Silergy in this document is believed to be accurate and reliable. However, Silergy makes no representation or warranty, expressed or implied, as to the accuracy or completeness of such information and shall have no liability for the consequences of use of such information. In no event shall Silergy be liable for any indirect, incidental, punitive, special or consequential damages, including but not limited to lost profits, lost savings, business interruption, costs related to the removal or replacement of any products or rework charges, whether or not such damages are based on tort or negligence, warranty, breach of contract or any other legal theory. Notwithstanding any damages that customer might incur for any reason whatsoever, Silergy' aggregate and cumulative liability towards customer for the products described herein shall be limited in accordance with the Standard Terms and Conditions of Sale of Silergy.

4. **Suitability for use.** Customer acknowledges and agrees that it is solely responsible for compliance with all legal, regulatory and safety-related requirements concerning its products, and any use of Silergy components in its applications, notwithstanding any applications-related information or support that may be provided by Silergy. Silergy products are not designed, authorized or warranted to be suitable for use in life support, life-critical or safety-critical systems or equipment, nor in applications where failure or malfunction of an Silergy product can reasonably be expected to result in personal injury, death or severe property or environmental damage. Silergy assumes no liability for inclusion and/or use of Silergy products in such equipment or applications and therefore such inclusion and/or use is at the customer's own risk.

5. **Terms and conditions of commercial sale**. Silergy products are sold subject to the standard terms and conditions of commercial sale, as published at http://www.silergy.com/stdterms, unless otherwise agreed in a valid written individual agreement specifically agreed to in writing by an authorized officer of Silergy. In case an individual agreement is concluded only the terms and conditions of the respective agreement shall apply. Silergy hereby expressly objects to and denies the application of any customer's general terms and conditions with regard to the purchase of Silergy products by the customer.

6. **No offer to sell or license**. Nothing in this document may be interpreted or construed as an offer to sell products that is open for acceptance or the grant, conveyance or implication of any license under any copyrights, patents or other industrial or intellectual property rights. Silergy makes no representation or warranty that any license, either express or implied, is granted under any patent right, copyright, mask work right, or other intellectual property right. Information published by Silergy regarding third-party products or services does not constitute a license to use such products or services or a warranty or endorsement thereof. Use of such information may require a license from a third party under the patents or other intellectual property of the third party, or a license from Silergy under the patents or other intellectual property of Silergy.

For more information, please visit: www.silergy.com

© 2020 Silergy Corp. All Rights Reserved.

Silergy Corp. Confidential Prepared for Orda

© 2020 Silergy Corp. All Rights Reserved.