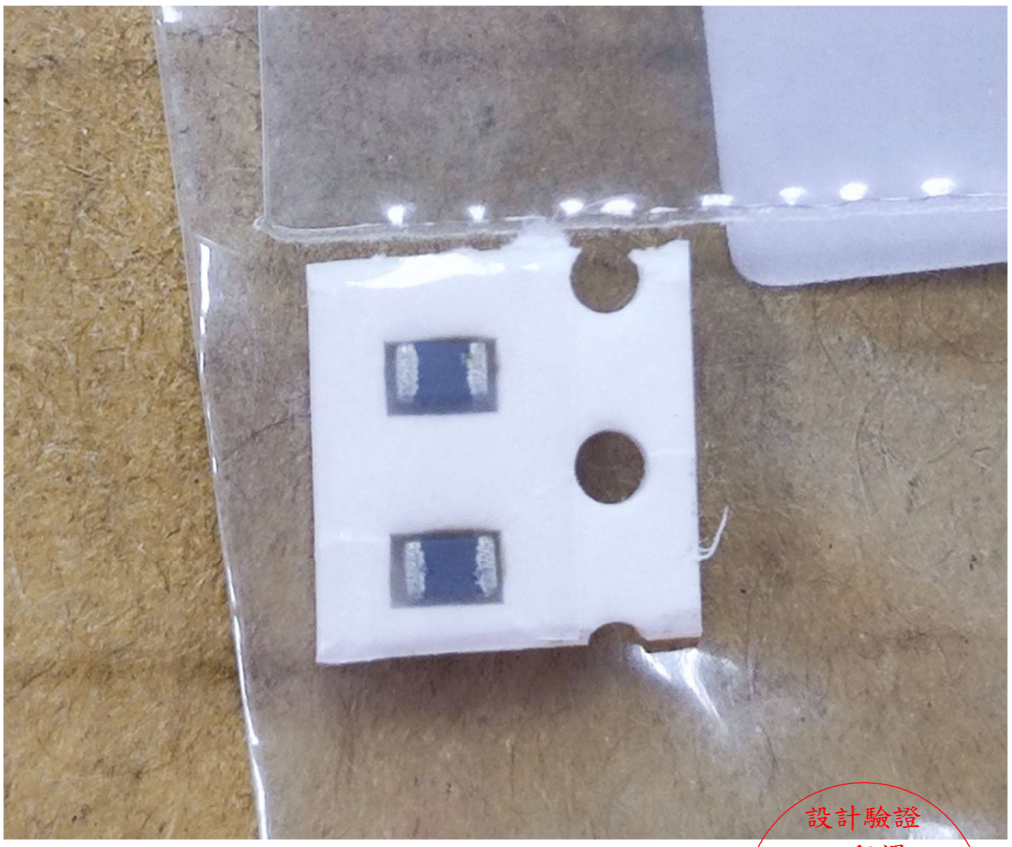

設計驗證
工程課
2023.12.06
發行
宏捷科技開發股份有限公司

軒慶股份有限公司
SUTANGTEK CO., LTD.

台北市 114 內湖區行善路 48 巷 18 號 4 樓
4F., No.18, Ln. 48, Xingshan Rd., Neihu Dist., Taipei City 114, Taiwan
TEL：886-2-7716-3189　FAX：886-2-8791-9330
Maill:sales@sutangtek.com.tw

承認書
FOR APPROVAL

客戶/CUSTOMER: 鈺緯科技開發股份有限公司

品名/PART NAME: Bead

料號/PART NO.: MHC2012S121UBP 承認 3LFBC00631Y(L0191)

ISSUE: 1

AUTHORIZED SIGNATURE	
SUTANGTEK	**CUSTOMER**
軒慶股份有限公司 TEL:886-2-77163189 FAX:886-2-87919330 11493台北市內湖區行善路48巷18號4樓	設計驗證 工程課 2023.12.06 發行 鈺緯科技開發股份有限公司
DATE: 29 / 11 / 2023	**DATE: / /**

PSA 佳邦科技股份有限公司
INPAQ TECHNOLOGY CO., LTD.

MHC 1005-4532 S Series

Specification

Product Name	High Current Chip Bead
Series	MHC S Series
Size	EIAJ 1005-4532

RoHS Pb

Chip Ferrite Bead for High Current (MHC-S Series) Engineering Spec.

This product belongs to the 3C and industrial grade standard, not for automotive application. If customer privately uses to automotive parts and results in any consequences, INPAQ is not responsible for after-sales service, thank you!

■ FEATURES

- **Combination of high frequency noise suppression with capability of handing high current**
- **The current rating up to 6 Amps with low DCR**

■ APPLICATIONS

- **High current DC power lines**
- **Circuits where a stable ground in unavailable**

■ SHAPES AND DIMENSIONS

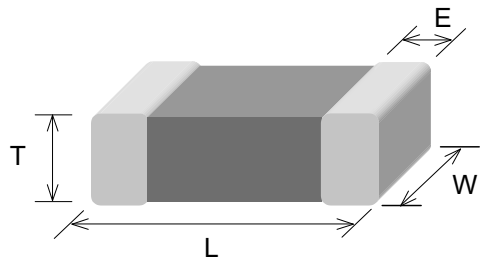

Unit: mm

TYPE	1005 (EIA 0402)	1608 (EIA 0603)	2012_08 (EIA 0805)	2012_12 (EIA 0805)	3216 (EIA 1206)	3225 (EIA 1210)	4516 (EIA 1806)	4532 (EIA 1812)
L	1.00±0.10	1.60±0.15	2.00±0.20	2.00±0.20	3.20±0.20	3.20±0.20	4.50±0.25	4.50±0.25
W	0.50±0.10	0.80±0.15	1.25±0.20	1.25±0.20	1.60±0.20	2.50±0.20	1.60±0.20	3.20±0.25
T	0.50±0.10	0.80±0.15	0.90±0.20	1.25±0.20	1.10±0.20	1.30±0.20	1.60±0.20	1.50±0.25
E	0.25±0.10	0.30±0.20	0.50±0.30	0.50±0.30	0.50±0.30	0.50±0.30	0.60±0.40	0.60±0.40

■ PART NUMBER CODE

MHC	1608	S	10	2	Z	B	P	A80
1	2	3	4	5	6	7	8	9

1. Series Name
2. Size Code：the first two digitals : length(mm) , the last two digitals : width(mm)
3. Material Code
4. Impedance(Ω) ± 25%
5. Fixed Decimal Point　　(ex：600=60Ω；121=120Ω)
6. Rated Current Code

L=1000mA	M=1500mA	N=2000mA	P=2500mA	Q=3000mA
R=4000mA	U=5000mA	W=6000mA	Z=other(refer to code 9)	

7. Soldering：Green Parts：A— Soldering Lead-Free、B— Lead-Free for whole chip
8. Packaging：P - Paper tape, 7" reel.
   E - Embossed plastic tape, 7" reel.
9. Rated Current Value：1A2=1.2A；A80=800mA

■ PART NUMBER AND CHARACTERISTICS TABLE

Part No.	Impedance (Ω) +/-25%	Test Freq. (MHz)	DCR(Ω) (Max.)	Rated Current (mA)
MHC1005 Series				
MHC1005S100NBP	10	100	0.09	2000
MHC1005S330QBP	33	100	0.04	3000
MHC1005S600PBP	60	100	0.07	2500
MHC1005S121MBP	120	100	0.15	1500
MHC1608 Series				
MHC1608S190QBP	19	100	0.04	3000
MHC1608S300QBP	30	100	0.04	3000
MHC1608S600QBP	60	100	0.04	3000
MHC1608S800QBP	80	100	0.04	3000
MHC1608S121NBP	120	100	0.09	2000

Part No.	Impedance (Ω) +/-25%	Test Freq. (MHz)	DCR(Ω) (Max.)	Rated Current (mA)
MHC1608 Series				
MHC1608S121PBP	120	100	0.07	2500
MHC1608S121QBP	120	100	0.04	3000
MHC1608S151NBP	150	100	0.09	2000
MHC1608S221NBP	220	100	0.09	2000
MHC1608S301MBP	300	100	0.15	1500
MHC1608S301NBP	300	100	0.09	2000
MHC1608S391MBP	390	100	0.15	1500
MHC1608S471LBP	470	100	0.20	1000
MHC1608S471MBP	470	100	0.15	1500
MHC1608S601LBP	600	100	0.20	1000
MHC1608S102ZBPA80	1000	100	0.25	800
MHC2012 Series				
MHC2012S300QBP	30	100	0.04	3000
MHC2012S310WBP	31	100	0.015	6000
MHC2012S400RBP	40	100	0.03	4000
MHC2012S600QBP	60	100	0.04	3000
MHC2012S800QBP	80	100	0.04	3000
MHC2012S800UBP	80	100	0.02	5000
MHC2012S121QBP	120	100	0.04	3000
MHC2012S121UBP	120	100	0.02	5000
MHC2012S151QBP	150	100	0.04	3000
MHC2012S181RBP	180	100	0.03	4000
MHC2012S221NBP	220	100	0.09	2000
MHC2012S221QBP	220	100	0.04	3000
MHC2012S301LBP	300	100	0.20	1000
MHC2012S301NBP	300	100	0.09	2000
MHC2012S301PBP	300	100	0.07	2500
MHC2012S331NBP	330	100	0.09	2000
MHC2012S331PBP	330	100	0.07	2500
MHC2012S421LBP	420	100	0.20	1000
MHC2012S471LBP	470	100	0.20	1000
MHC2012S601LBP	600	100	0.20	1000
MHC2012S601NBP	600	100	0.09	2000

Part No.	Impedance (Ω) +/-25%	Test Freq. (MHz)	DCR(Ω) (Max.)	Rated Current (mA)
MHC2012 Series				
MHC2012S102LBP	1000	100	0.20	1000
*MHC2012S102NBE	1000	100	0.09	2000
MHC2012S152LBP	1500	100	0.30	1000
MHC3216 Series				
MHC3216S190WBE	19	100	0.015	6000
MHC3216S300WBE	30	100	0.015	6000
MHC3216S380UBE	38	100	0.02	5000
MHC3216S500QBE	50	100	0.04	3000
MHC3216S500WBE	50	100	0.015	6000
MHC3216S800RBE	80	100	0.03	4000
MHC3216S121NBE	120	100	0.09	2000
MHC3216S121WBE	120	100	0.015	6000
MHC3216S151NBE	150	100	0.09	2000
MHC3216S221NBE	220	100	0.09	2000
MHC3216S301LBE	300	100	0.20	1000
MHC3216S301NBE	300	100	0.09	2000
MHC3216S391NBE	390	100	0.09	2000
MHC3216S471LBE	470	100	0.20	1000
MHC3216S471NBE	470	100	0.09	2000
MHC3216S501QBE	500	100	0.04	3000
MHC3216S601NBE	600	100	0.09	2000
MHC3216S601PBE	600	100	0.07	2500
MHC3216S122LBE	1200	100	0.20	1000
MHC3225 Series				
MHC3225S600MBE	60	100	0.15	1500
MHC3225S102NBE	1000	50	0.09	2000
MHC4516 series				
MHC4516S600WBE	60	100	0.015	6000
MHC4516S181ZBE3A5	180	100	0.02	3500
MHC4516S851MBE	850	100	0.15	1500
MHC4532 Series				
MHC4532S121WBE	120	100	0.015	6000
MHC4532S601QBE	600	50	0.04	3000

Part No.	Impedance (Ω) +/-25%	Test Freq. (MHz)	DCR(Ω) (Max.)	Rated Current (mA)
MHC4532 Series				
MHC4532S681RBE	680	100	0.03	4000
MHC4532S132QBE	1300	60	0.04	3000
	•Test Level：250 mV			
Test Instruments：	•HP4291B RF IMPEDANCE / MATERIAL ANALYZER or EQUIVALENT •HP4338A/B MILLIOHMMETER •Agilent E5071C ENA SERIES NETWORK ANALYZER •HP6632B SYSTEM DC POWER SUPPLY			

*1：For special part number which is not shown in the above table, please refer to appendix.

*2：" * " The thickness 1.25±0.20mm

■ TAPE AND REEL SPECIFICATIONS

PLASTIC CARRIER

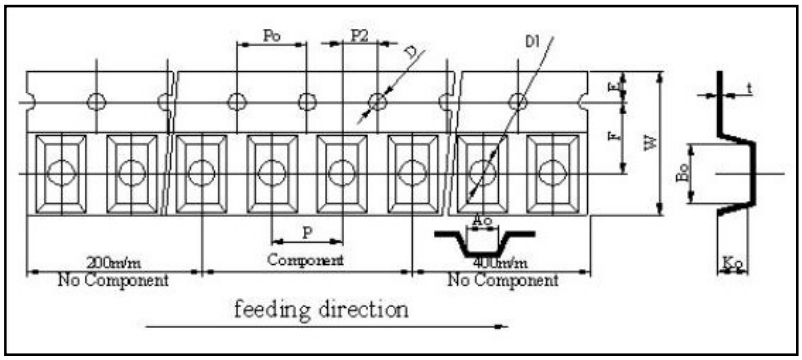

PAPER CARRIER

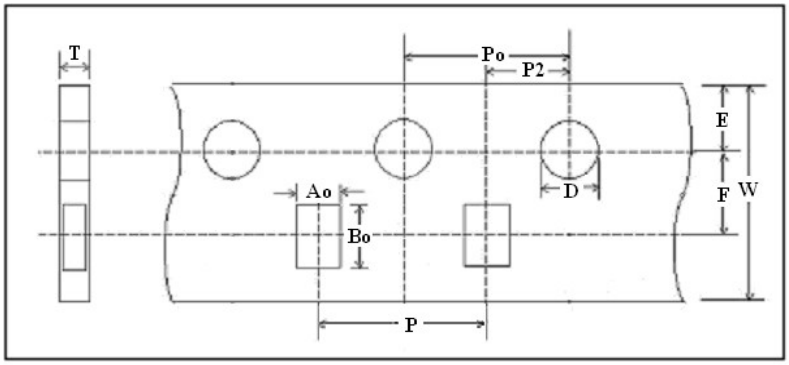

■ TAPING DIMENSIONS

Unit: mm

Size	4532	4516	3225	3216	2012_12	2012_09	1608	1005
Symbol	PLASTIC	PLASTIC	PLASTIC	PLASTIC	PLASTIC	PAPER	PAPER	PAPER
W	12.0±0.10	11.7~12.3	7.70~8.30	7.90~8.30	7.90~8.30	8.00±0.10	8.00±0.10	8.00±0.10
P	8.00±0.10	4.00±0.10	4.00±0.10	4.00±0.10	4.00±0.10	4.00±0.10	4.00±0.10	2.00±0.05
E	1.75±0.10	1.75±0.10	1.75±0.10	1.75±0.10	1.75±0.10	1.75±0.10	1.75±0.10	1.75±0.05
F	5.50±0.05	5.50±0.05	3.50±0.05	3.50±0.05	3.50±0.05	3.50±0.10	3.50±0.10	3.50±0.05
D	1.55±0.05	1.55±0.05	1.55±0.05	1.55±0.05	1.50±0.05	1.56±0.10	1.56±0.10	1.55±0.05
D1	1.50~1.75	1.50~1.75	0.95~1.20	0.95~1.20	0.95~1.20	NA	NA	NA
Po	4.00±0.10	4.00±0.10	4.00±0.10	4.00±0.10	4.00±0.10	4.00±0.10	4.00±0.10	4.00±0.10
Po10	40.0±0.20	40.0±0.20	40.0±0.20	40.0±0.20	40.0±0.20	40.0±0.20	NA	NA
P2	2.00±0.05	2.00±0.05	2.00±0.05	2.00±0.05	2.00±0.05	2.00±0.10	2.00±0.10	2.00±0.05
Ao	3.66±0.10	1.83±0.10	2.57±0.10	1.85±0.10	1.42±0.10	1.50±0.05	1.05±0.05	0.62±0.03
Bo	4.95±0.10	4.85±0.10	3.40±0.10	3.43±0.10	2.26±0.10	2.30±0.05	1.85±0.05	1.12±0.03
Ko(T)	1.83±0.10	1.83±0.10	1.32±0.10	1.22±0.10	1.30±0.10	0.95±0.05	0.95±0.05	0.60±0.03
t	0.23±0.10	0.29±0.10	0.25±0.10	0.25±0.10	0.23±0.10	NA	NA	NA

■ REEL DIMENSIONS

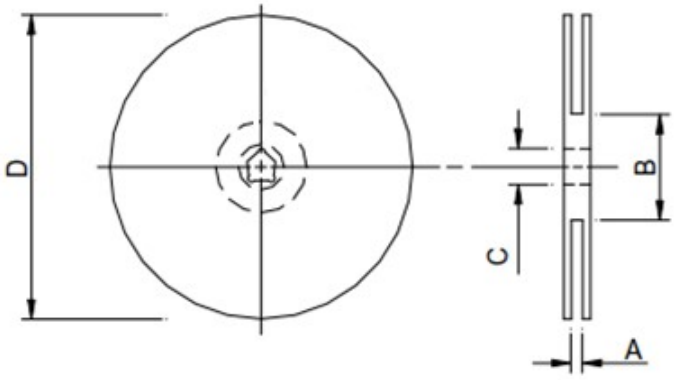

Type	7"
A(mm)	10±1.5
B(mm)	50 or more
C(mm)	13.2±1.0
D(mm)	178±2.0

7" Reel Packaging Quantity								
PART SIZE (EIA SIZE)	1005 (0402)	1608 (0603)	2012_09 (0805)	2012_12 (0805)	3216 (1206)	3225 (1210)	4516 (1806)	4532 (1812)
Qty.(pcs)	10,000	4,000	4,000	3,000	3,000	2,000	2,000	1,000
BOX	5 reels / inner box						4 reels / inner box	

■ RECOMMENDED SOLDERING CONDITIONS

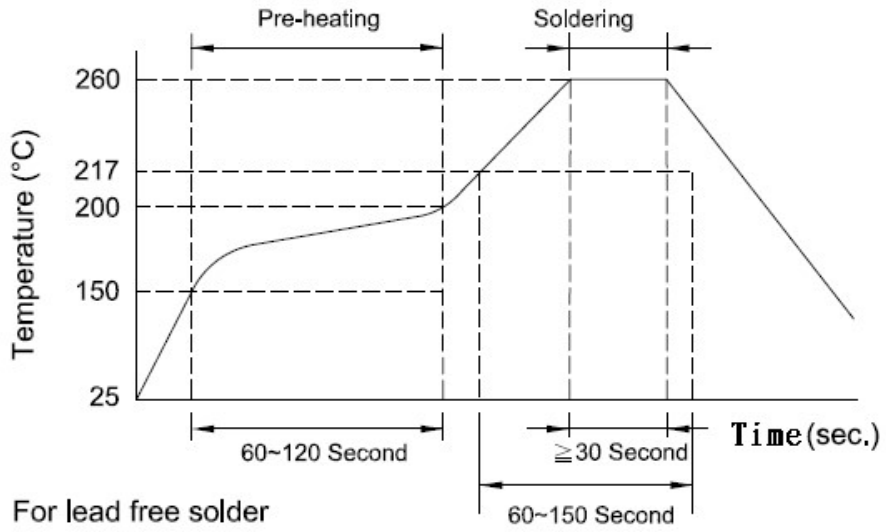

■ LAND PATTERNS FOR REFLOW SOLDERING

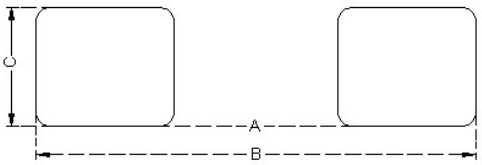

■ SOLDER LAND INFORMATION

Unit: mm (inches)

Size	A	B	C
1005	0.4 (0.016)	1.2 ～ 1.4 (0.047 ～ 0.055)	0.5 (0.020)
1608	0.7 (0.028)	1.8 ～ 2.0 (0.071 ～ 0.079)	0.7 (0.028)
2012	1.2 (0.047)	3.0 ～ 4.0 (0.118 ～ 0.157)	1.0 (0.039)
3216	2.0 (0.079)	4.2 ～ 5.2 (0.165 ～ 0.205)	1.2 (0.047)
3225	2.0 (0.079)	4.2 ～ 5.2 (0.165 ～ 0.205)	3.4 (0.134)
4516	3.0 (0.118)	5.5 ～ 6.5 (0.217 ～ 0.256)	1.2 (0.047)
4532	3.0 (0.118)	5.5 ～ 6.5 (0.217 ～ 0.256)	4.22 (0.166)

■ GENERAL TECHNICAL DATA

Operating temperature range：- 55℃ ~ +125℃
Storage Condition：Less than 40℃ and 70% RH
Storage Time：6 months Max.(Size：1005)
12 months Max.(Size：1608 above)
Soldering method：Reflow

■ RELIABILITY AND TEST CONDITION

Test item	Test condition	Criteria
Thermal Shock	a. Temperature : -40 ~ +85℃ b. Cycle : 100 cycles c. Dwell time : 30minutes d. Measurement : at ambient temperature 24 hrs after test completion	a. No mechanical damage b. Impedance value should be within ± 20 % of the initial value
Operational Life	a. Temperature : 125℃ ± 5℃ b. Test time : 1000 hrs c. Apply current : full rated current d. Measurement : at ambient temperature 24 hrs after test completion	a. No mechanical damage b. Impedance value should be within ± 20 % of the initial value
Rated Current Test	a. Apply current : full rated current / 5min	Temperature rise should be less than 40℃
Biased Humidity	a. Temperature : 40℃ ± 2℃ b. Humidity : 90 ~ 95 % RH c. Test time : 1000 hrs d. Apply current : full rated current e. Measurement : at ambient temperature 24 hrs after test completion	a. No mechanical damage b. Impedance value should be within ± 20 % of the initial value
Resistance to Solder Heat	a. Solder temperature : 260 ± 5℃ b. Flux : Rosin c. DIP time : 10 ± 1 sec	a. More than 95 % of terminal electrode should be covered with new solder b. No mechanical damage c. Impedance value should be within ± 20 % of the initial value

Test item	Test condition	Criteria
Adhesive Test	a. Reflow temperature : 245℃ It shall be Soldered on the substrate applying direction paralle1 to the substrate b. Apply force(F) : 5 N c. Test time : 10 sec	a. No mechanical damage b. Soldering the products on PCB after the pulling test force > 5 N
Steam Aging Test	a. Temperature : 93℃ b. Test time : 4 hrs(MHC1005) Others : 8 hrs c. Solder temperature : 235 ± 5℃ d. Flux : Rosin e. DIP time : 5 ± 1 sec	More than 95 % of terminal electrode should be covered with new solder

Test Report

NO.：BRC24U0B2882087D1 Issued Date：2023-04-19

Applicant： INPAQ TECHNOLOGY (CHINA) CO.,LTD

The following sample(s) was/were submitted and identified on behalf of the client as：

Covered Name： FERRITE CHIP BEAD,INDUCTOR

Covered Model： MIP,MCB,MHC,MFI,MPA SERIES

Sample Source： Send Sample

Sample Received Date： 2023-04-14

Testing Period： 2023-04-14~2023-04-19

Test Methods：

(1) IEC 62321-5 Edition 1.0:2013 method, Lead Analysis is performed by AAS

(2) IEC 62321-5 Edition 1.0:2013 method, Cadmium Analysis is performed by AAS

(3) IEC 62321-4:2013+AMD1:2017 CSV method, Mercury Analysis is performed by ICP-OES

(4) IEC62321-7-2 Edition 1.0:2017 method, Hexavalent Chromium Analysis is performed by UV-Vis

(5) IEC 62321-6 Edition 1.0:2015 method, PBBs and PBDEs Analysis is performed by GC-MS

(6) IEC 62321-8 Edition 1.0:2017 method, Phthalate Analysis is performed by GC-MS

(7) EN 14582:2016 method,F, Cl, Br, I Analysis is performed by IC

Testing Results： Please refer to next page(s)

Edited by： Ci Shuangshuang — Ci Shuangshuang

Checked by： Zhang Tianyu — Zhang Tianyu

Approved by： Zhang Yaoqiang — Zhang Yaoqiang

Issued Date： 2023-04-19

PONY TESTING INTERNATIONAL GROUP SHANGHAI CO.,LTD. 谱尼测试集团上海有限公司 PONY 检验检测专用章

————The page below is blank————

Test Report

NO.：BRC24U0B2882087D1 Issued Date：2023-04-19 Page 2 of 7

Test Results (Unit：mg/kg)

Sample Number and Covered Name：B2882087D1 FERRITE CHIP BEAD,INDUCTOR

Test Item	MDL	Test Result	RoHS Limit
Lead (Pb)	1	N.D.	1000
Cadmium (Cd)	1	N.D.	100
Mercury (Hg)	1	N.D.	1000
Hexavalent Chromium (Cr^{6+})	8	N.D.	1000
Sum of PBBs	—	N.D.	1000
Bromobiphenyl	5	N.D.	—
Dibromobiphenyl	5	N.D.	—
Tribromobiphenyl	5	N.D.	—
Tetrabromobiphenyl	5	N.D.	—
Pentabromobiphenyl	5	N.D.	—
Hexabromobiphenyl	5	N.D.	—
Heptabromobiphenyl	5	N.D.	—
Octabromobiphenyl	5	N.D.	—
Nonabromobiphenyl	5	N.D.	—
Decabromobiphenyl	5	N.D.	—
Sum of PBDEs	—	N.D.	1000
Bromodiphenyl ether	5	N.D.	—
Dibromodiphenyl ether	5	N.D.	—
Tribromodiphenyl ether	5	N.D.	—
Tetrabromodiphenyl ether	5	N.D.	—
Pentabromodiphenyl ether	5	N.D.	—
Hexabromodiphenyl ether	5	N.D.	—
Heptabromodiphenyl ether	5	N.D.	—
Octabromodiphenyl ether	5	N.D.	—
Nonabromodiphenyl ether	5	N.D.	—
Decabromodiphenyl ether	5	N.D.	—

————The page below is blank————

Test Report

NO.：BRC24U0B2882087D1 Issued Date：2023-04-19

Test Results (Unit：mg/kg)

Test Item	CAS Number	MDL	Test Result	RoHS Limit
DEHP	117-81-7	30	N.D.	1000
DBP	84-74-2	30	N.D.	1000
BBP	85-68-7	30	N.D.	1000
DIBP	84-69-5	30	N.D.	1000

Test Result (Unit：mg/kg)

Test Item	MDL	Test Result
F	50	N.D.
Cl	50	N.D.
Br	50	N.D.
I	50	N.D.

Note： (1) mg/kg = ppm
(2) "—" = Does not stipulate
(3) N.D. = Not Detected (＜MDL)
(4) MDL = Method Detection Limit
(5) The most allowable limit value reference to RoHS Directive 2011/65/EU & (EU)2015/863 Annex Ⅱ
(6) According to the statement of the applicant, covered name/covered model is the same material, PONY is not responsible for the authenticity of this information.

Sample No. &Photo：

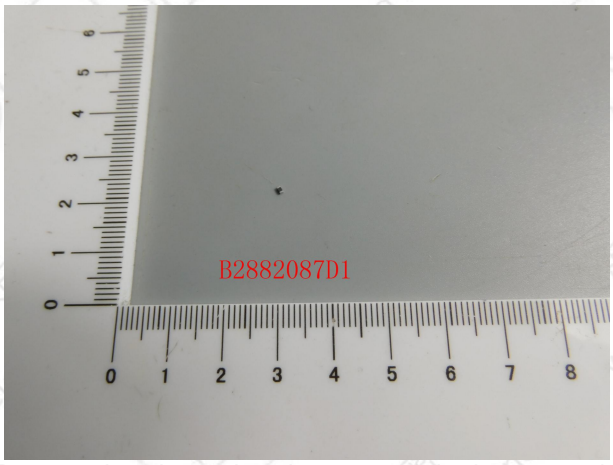

Pony authenticate the photo on original report only

————The page below is blank————

Measurement Flow-chart

These Samples Were Dissolved Totally By Pre-conditioning Method According To Below Flow Chart. (Cr^{6+} Test Method Excluded)

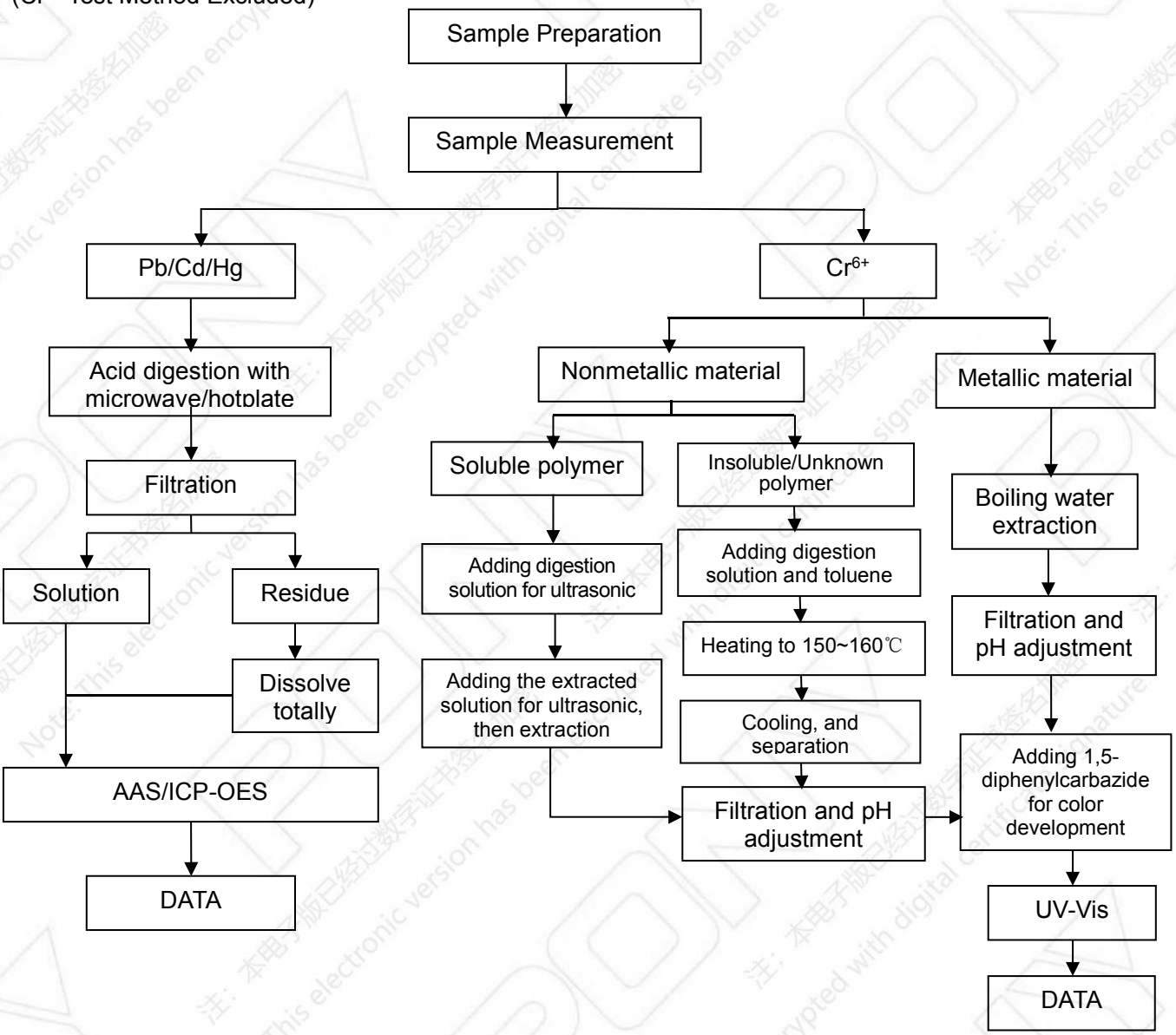

————The page below is blank————

Measurement Flow-chart

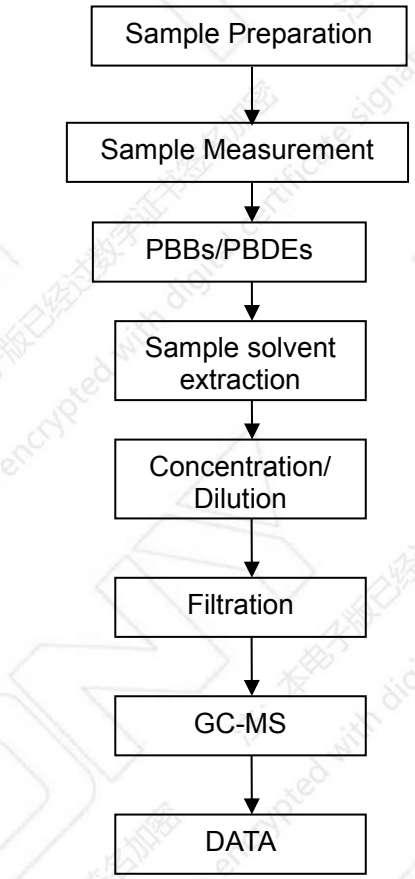

————The page below is blank————

Phthalate Flow Chart

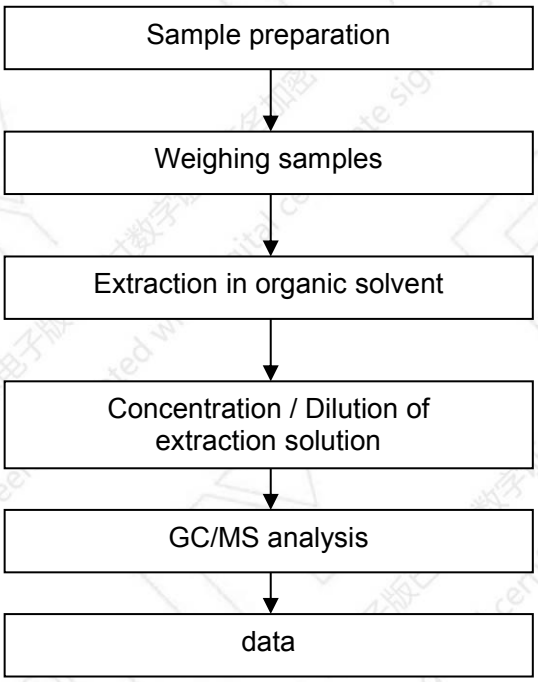

————The page below is blank————

Halogen measurement flow-chart

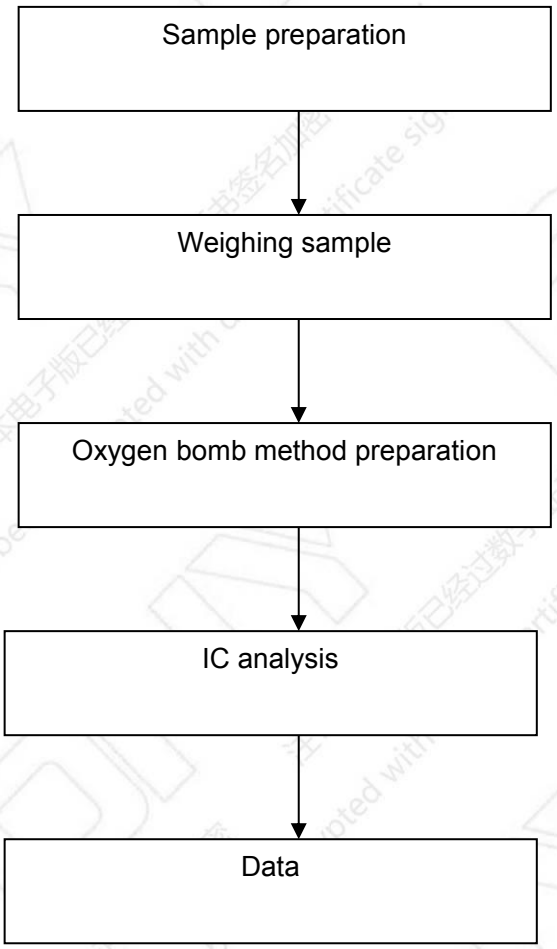

————End of Report————