□ Tentative Specification
□ Preliminary Specification
■ Approval Specification

MODEL NO.: S650DJ6

SUFFIX: D02

Revision : C2
Customer : C3TFTLCD6550089(T0205)

APPROVED BY SIGNATURE

Name / Title
Note

設計驗證
工程課
2024.01.29
發行
宜鴻科技開發股份有限公司

Please return 1 copy for your confirmation with your signature and comments.

Approved By	Checked By	Prepared By
Chih Fan Ting	Vita Wu	Delia Lin

The copyright belongs to InnoLux. Any unauthorized use is prohibited

CONTENTS

1. GENERAL DESCRIPTION 5
1.1 OVERVIEW 5
1.2 FEATURES 5
1.3 GENERAL SPECIFICATIONS 6
1.4 MECHANICAL SPECIFICATIONS 6

2. ABSOLUTE MAXIMUM RATINGS 7
2.1 ABSOLUTE RATINGS OF ENVIRONMENT 7
2.2 PACKAGE STORAGE 8
2.3 ELECTRICAL ABSOLUTE RATINGS 8
2.3.1 TFT LCD MODULE 8
2.3.2 BACKLIGHT CONVERTER UNIT 8

3. ELECTRICAL CHARACTERISTICS 9
3.1 TFT LCD MODULE 9
3.2 BACKLIGHT UNIT 10
3.2.1 CONVERTER CHARACTERISTICS 10
3.2.2 CONVERTER INTERFACE CHARACTERISTICS 12

4 .INPUT TERMINAL PIN ASSIGNMENT 14
4.1 TFT LCD MODULE 14
4.2 BACKLIGHT UNIT 17
4.2.1 LIGHT BAR UNIT 17
4.2.2 CONVERTER UNIT 19
4.3 COLOR DATA INPUT ASSIGNMENT 21

5. INTERFACE TIMING 22
5.1 INPUT SIGNAL TIMING SPECIFICATIONS 22
5.1.1 Timing spec for QFHD Frame Rate = 50Hz 22
5.1.2 Timing spec for QFHD Frame Rate = 60Hz 23
5.2 Timing Dragram 25
5.2.1 V by One Input Signal Timing Diagram 25
5.3 Byte Length and Color mapping of V-by-One HS 26
5.4 POWER ON/OFF SEQUENCE 27

6. OPTICAL CHARACTERISTICS 29
6.1 TEST CONDITIONS 29

The copyright belongs to InnoLux. Any unauthorized use is prohibited

6.2 OPTICAL SPECIFICATIONS 30

7. PRECAUTIONS 33
7.1 ASSEMBLY AND HANDLING PRECAUTIONS 33
7.2 SAFETY PRECAUTIONS 34
7.3 SAFETY STANDARDS 35

8. DEFINITION OF LABELS 36
8.1 MODULE LABEL 36
8.2 CARTON LABEL 37

9. PACKAGING 38
9.1 PACKAGING SPECIFICATIONS 38
9.2 PACKAGING METHOD 38
9.3 UN-PACKAGING METHOD 39

10. MECHANICAL CHARACTERISTIC 40

The copyright belongs to InnoLux. Any unauthorized use is prohibited

REVISION HISTORY

Version	Date	Page (New)	Section	Description
Ver.0.0	2018.5.31	All	All	The tentative specification was first issued.
Ver.1.0	2018.9.6	All	All	The preliminary specification was first issued.
Ver.2.0	2018.11.8	All	All	The approval specification was first issued.

The copyright belongs to InnoLux. Any unauthorized use is prohibited

1. GENERAL DESCRIPTION

1.1 OVERVIEW

S650DJ6-D02 is a 65″ TFT Liquid Crystal Display PID module with LED Backlight unit and 8Lanes V-by-One HS interface. This module supports 3840 x 2160 Quad Full HDTV format and can display true 1.07G colors (8-bit+FRC). The converter module for backlight is built-in.

1.2 FEATURES

- High brightness 500 nits
- High contrast ratio 5000:1
- Fast response time Gray to Gray typical : 9.5 ms
- High color saturation NTSC 72%
- Quad Full HDTV (3840 x 2160 pixels) resolution, true HDTV format
- V-by-One HS interface
- Optimized response time for 50Hz/60Hz frame rate
- Viewing Angle : 178(H)/178(V) (CR>10) VA Technology
- Ultra wide viewing angle: Super MVA technology
- RoHs compliance
- T-con input frame rate *: QFHD 50/60Hz,
  Output frame rate: QFHD 50/60Hz

The copyright belongs to InnoLux. Any unauthorized use is prohibited

1.3 GENERAL SPECIFICATIONS

Item	Specification	Unit	Note
Active Area	1428.48(H) x 803.52(V) (65″ diagonal)	mm	(1)
Bezel Opening Area	1432.28(H) x 807.32(V)	mm	
Driver Element	a-si TFT active matrix	-	-
Pixel Number	3840 x R.G.B. x 2160	pixel	-
Pixel Pitch(Sub Pixel)	0.124(H) x 0.372(V)	mm	-
Pixel Arrangement	RGB vertical stripe	-	-
Display Colors	1.07G colors (8-bit+FRC)	color	-
Display Operation Mode	Transmissive mode / Normally black	-	-
Surface Treatment	AG(haze~1%), Hardness=3H	-	(2)
Rotation Function	Unachievable		(3)
Display Orientation	Signal input with “INX”		(3)

Note (1) Please refer to the attached drawings in chapter 11 for more information about the front and back outlines.

Note (2) The spec of the surface treatment is temporarily for this phase. INX reserves the rights to change this feature.

Note (3)

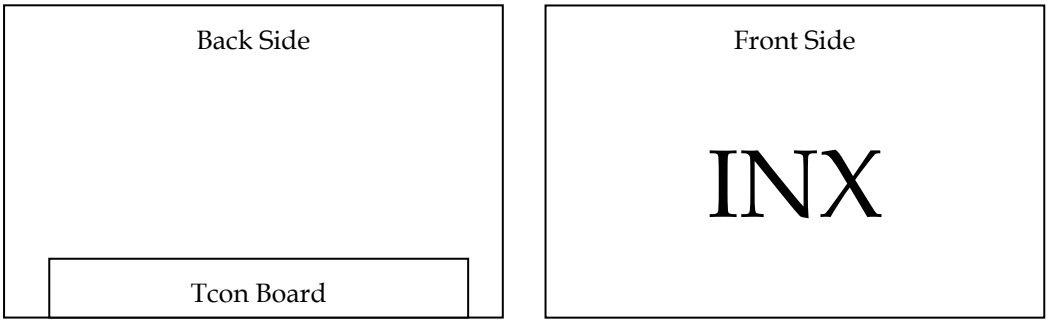

1.4 MECHANICAL SPECIFICATIONS

Item		Min.	Typ.	Max.	Unit	Note
Module Size	Horizontal (H)	1452.28	1454.08	1455.88	mm	(1),(2)
	Vertical (V)	827.62	829.120	830.62	mm	(1),(2)
	Depth (D)	39	40	41	mm	To Rear
		58.1	59.1	60.1	mm	To converter cover
Weight		18278	19240	20202	g	

Note (1) Please refer to the attached drawings for more information of front and back outline dimensions.

Note (2) Module Depth does not include connectors.

The copyright belongs to InnoLux. Any unauthorized use is prohibited

2. ABSOLUTE MAXIMUM RATINGS

2.1 ABSOLUTE RATINGS OF ENVIRONMENT

Item	Symbol	Value		Unit	Note
		Min.	Max.		
Storage Temperature	T_{ST}	-20	+60	°C	(1)
Operating Ambient Temperature	T_{OP}	0	50	°C	(1), (2)
Shock (Non-Operating)	S_{NOP}	-	35	G	(3), (5)
Vibration (Non-Operating)	V_{NOP}	-	1.0	G	(4), (5)

Note (1) Temperature and relative humidity range is shown in the figure below.

(a) 90 %RH Max. (Ta ≦ 40 °C).

(b) Wet-bulb temperature should be 39 °C Max.

(c) No condensation.

Note (2) Thermal management should be considered in final product design to prevent the surface temperature of display area from being over 65 °C. The range of operating temperature may degrade in case of improper thermal management in final product design.

Note (3) 11 ms, half sine wave, 1 time for ± X, ± Y, ± Z.

Note (4) 10 ~ 200 Hz, 30 min, 1 time each X, Y, Z.

Note (5) At testing Vibration and Shock, the fixture in holding the module has to be hard and rigid enough so that the module would not be twisted or bent by the fixture.

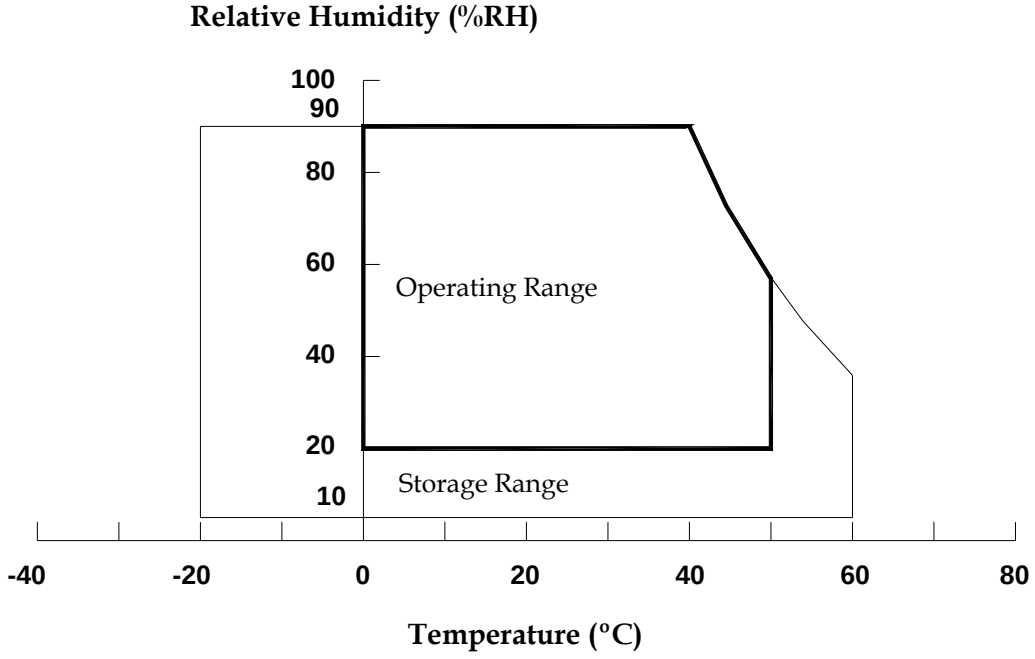

The copyright belongs to InnoLux. Any unauthorized use is prohibited

2.2 PACKAGE STORAGE

When storing modules as spares for a long time, the following precaution is necessary.

(a) Do not leave the module in high temperature, and high humidity for a long time, It is highly recommended to store the module with temperature from 0 to 35 ℃ at normal humidity without condensation.

(b) The module shall be stored in dark place. Do not store the TFT-LCD module in direct sunlight or fluorescent light.

2.3 ELECTRICAL ABSOLUTE RATINGS

2.3.1 TFT LCD MODULE

Item	Symbol	Value		Unit	Note
		Min.	Max.		
Power Supply Voltage	VCC	-0.3	13.5	V	(1)
Logic Input Voltage	VIN	-0.3	3.6	V	

Note (1) Permanent damage to the device may occur if maximum values are exceeded. Function operation should be restricted to the conditions described under Normal Operating Conditions.

2.3.2 BACKLIGHT CONVERTER UNIT

Item	Symbol	Test Condition	Min.	Type	Max.	Unit	Note
Light Bar Voltage	V_W	Ta = 25 ℃	-	-	60	V_{RMS}	
Converter Input Voltage	V_{BL}	-	0	-	30	V	
Control Signal Level	-	-	-0.3	-	6	V	

Note (1) Permanent damage to the device may occur if maximum values are exceeded. Function operation should be restricted to the conditions described under Normal Operating Conditions.

Note (2) No moisture condensation or freezing.

Note (3) The control signals include On/Off Control and External PWM Control.

The copyright belongs to InnoLux. Any unauthorized use is prohibited

3. ELECTRICAL CHARACTERISTICS

3.1 TFT LCD MODULE

(Ta = 25 ± 2 °C)

Parameter		Symbol	Value			Unit	Note
			Min.	Typ.	Max.		
Power Supply Voltage		V_{CC}	10.8	12	13.2	V	(1)
Rush Current		I_{RUSH}	—	—	4.06	A	(2)
QFHD 60Hz Output Power Consumption	White Pattern	P_T	—	13.66	15.03	W	(3)
	Horizontal Stripe	P_T	—	25.34	27.87	W	
	Black Pattern	P_T	—	10.02	11.02	W	
QFHD 60Hz Output Power Supply Current	White Pattern	—	—	1.18	1.42	A	
	Horizontal Stripe	—	—	2.2	2.65	A	
	Black Pattern	—	—	0.86	1.04	A	
V-by-One HS	Differential Input High Threshold Voltage	VLVTH	—	—	+50	mV	
	Differential Input Low Threshold Voltage	VLVTL	-50	—	—	mV	
	Differential Input Resistor	RRIN	80	100	120	ohm	
CMOS interface	Input High Threshold Voltage	V_{IH}	2.7	—	3.6	V	
	Input Low Threshold Voltage	V_{IL}	0	—	0.7	V	

Note (1) The module should be always operated within the above ranges. The ripple voltage should be controlled under 10% of Vcc (Typ.)

Note (2) Measurement condition :

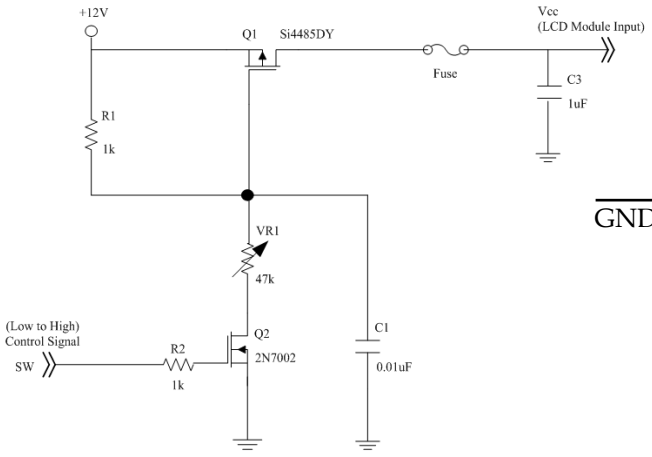

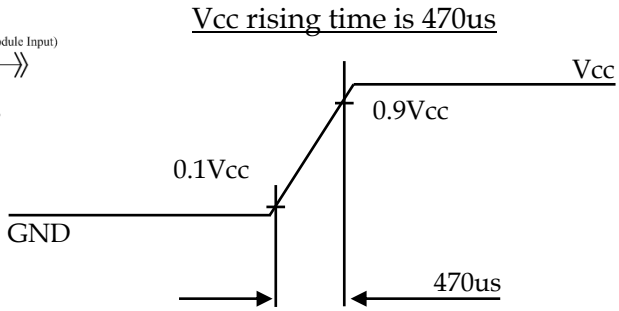

The copyright belongs to InnoLux. Any unauthorized use is prohibited

Note (3) The specified power supply current is under the conditions at Vcc = 12 V, Ta = 25 ± 2 °C, fv = 60 Hz, whereas a power dissipation check pattern below is displayed.

a. White Pattern

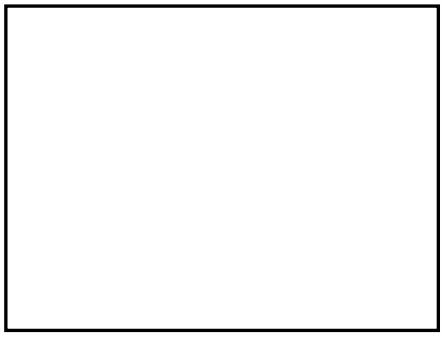

Active Area

b. Black Pattern



Active Area

c. Heavy Loading pattern

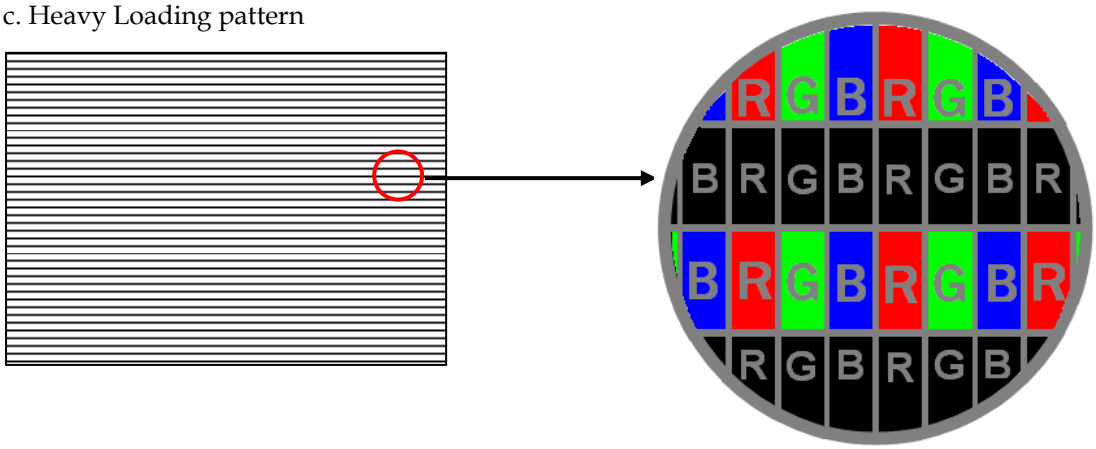

3.2 BACKLIGHT UNIT

3.2.1 CONVERTER CHARACTERISTICS

Parameter	Symbol	Value			Unit	Note
		Min.	Typ.	Max.		
Power Consumption	P_{BL}	-	123	130	W	(1), (2)
Converter Input Voltage	VBL	22.8	24.0	25.2	VDC	
Converter Input Current	I_{BL}	-	5.13	5.42	A	Non Dimming
Input Inrush Current	I_R	-	-	12	Apeak	V_{BL}=22.8V, (3)
Dimming Frequency	FB	1940	2000	2060	Hz	
Dimming Duty Ratio	DDR	16	-	100	%	(4)
Life Time	-	30,000	50,000	-	Hrs	(5)

The copyright belongs to InnoLux. Any unauthorized use is prohibited

Note (1) The power supply capacity should be higher than the total converter power consumption P_{BL}. Since the pulse width modulation (PWM) mode was applied for backlight dimming, the driving current changed as PWM duty on and off. The transient response of power supply should be considered for the changing loading when converter dimming.

Note (2) The measurement condition of Max. value is based on 65" backlight unit under input voltage 24V, at 2D Mode and lighting 1 hour later.

Note (3) For input inrush current measure, the VBL rising time from 10% to 90% is about 20ms.

Note (4) EPWM signal have to input available duty range. Between 97% and 100% duty (DDR) have to be avoided. (97% < DDR < 100%) But 100% duty (DDR) is possible. 16% duty (DDR) is only valid for electrical operation.

Note (5) FB and DDR are available only at 2D Mode.

Note (6) Below diagram is only for power supply design reference.

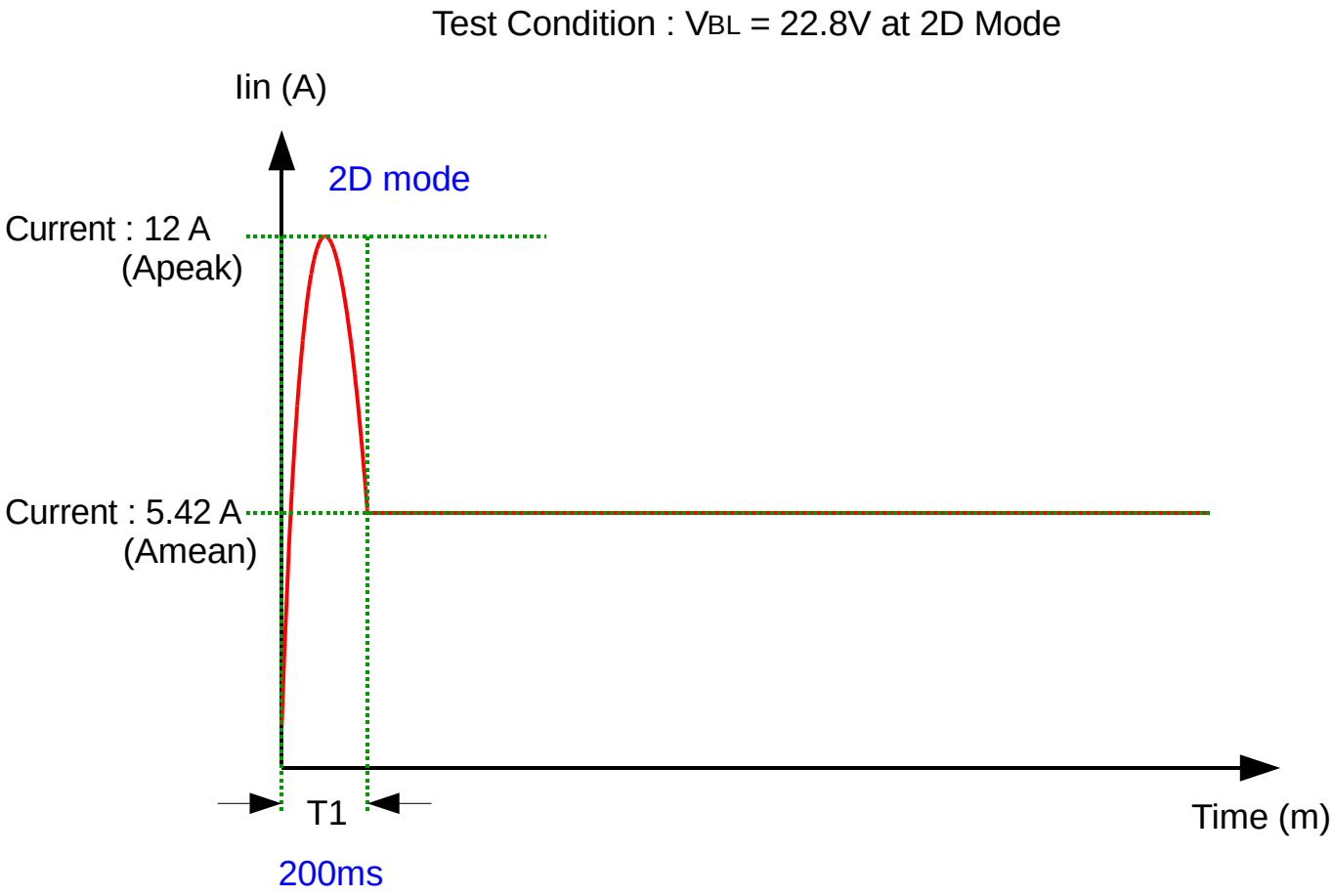

Note (7) The lifetime is defined as the time which luminance of the LED decays to 50% compared to the initial value, Operating condition: Continuous operating at Ta = 25±2℃

The copyright belongs to InnoLux. Any unauthorized use is prohibited

3.2.2 CONVERTER INTERFACE CHARACTERISTICS

Parameter		Symbol	Test Condition	Value			Unit	Note	
				Min.	Typ.	Max.			
On/Off Control Voltage	ON	VBLON	—	2.0	—	5.0	V		
	OFF		—	0	—	0.8	V		
External PWM Control Voltage	HI	VEPWM	—	2.0	—	5.25	V	Duty on	(5), (6)
	LO		—	0	—	0.8	V	Duty off	
External PWM Frequency		F_{EPWM}	—	150	160	170	Hz	Normal mode (7)	
Error Signal		ERR	—	—	—	—	—	Abnormal: Open	
VBL Rising Time		Tr1	—	20	—	—	ms	10%-90%V_{BL}	
Control Signal Rising Time		Tr	—	—	—	100	ms		
Control Signal Falling Time		Tf	—	—	—	100	ms		
PWM Signal Rising Time		TPWMR	—	—	—	50	us	(6)	
PWM Signal Falling Time		TPWMF	—	—	—	50	us		
Input Impedance		Rin	—	1	—	—	MΩ	EPWM, BLON	
PWM Delay Time		TPWM	—	100	—	—	ms	(6)	
BLON Delay Time		T_{on}	—	300	—	—	ms		
		T_{on1}	—	300	—	—	ms		
BLON Off Time		Toff	—	300	—	—	ms		

Note (1) The Dimming signal should be valid before backlight turns on by BLON signal. It is inhibited to change the external PWM signal during backlight turn on period.

Note (2) The power sequence and control signal timing are shown in the Fig.1. For a certain reason, the converter has a possibility to be damaged with wrong power sequence and control signal timing.

Note (3) While system is turned ON or OFF, the power sequences must follow as below descriptions:

Turn ON sequence: VBL → PWM signal → BLON

Turn OFF sequence: BLOFF → PWM signal → VBL

Note (4) When converter protective function is triggered, ERR will output open collector status. Please refers to Fig.2.

Note (5) The EPWM interface that inserts a pull up resistor to 5V in Max Duty (100%), please refers to Fig.3.

Note (6) EPWM is available only at 2D Mode.

Note (7) EPWM signal have to input available frequency range.

The copyright belongs to InnoLux. Any unauthorized use is prohibited

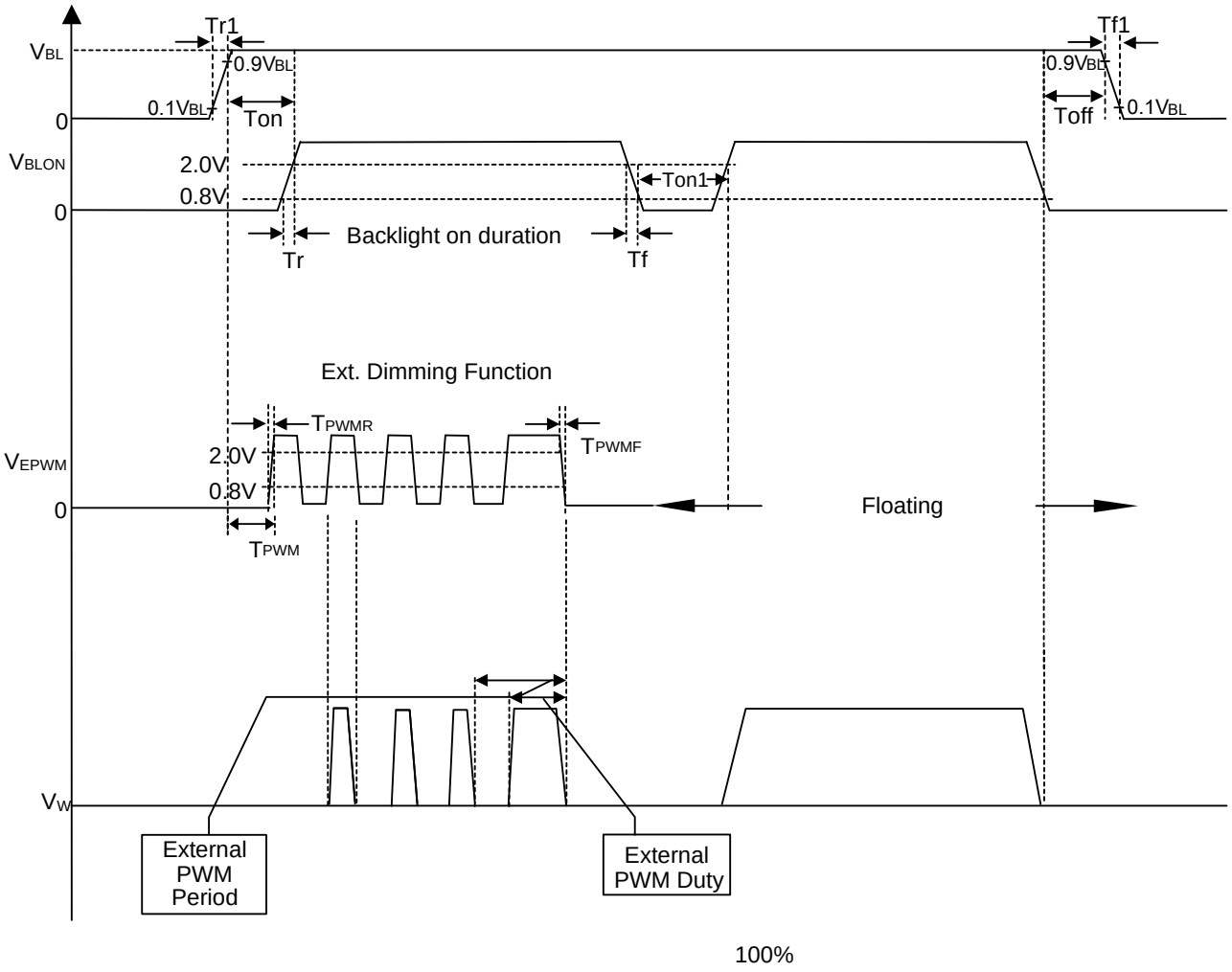

Fig. 1

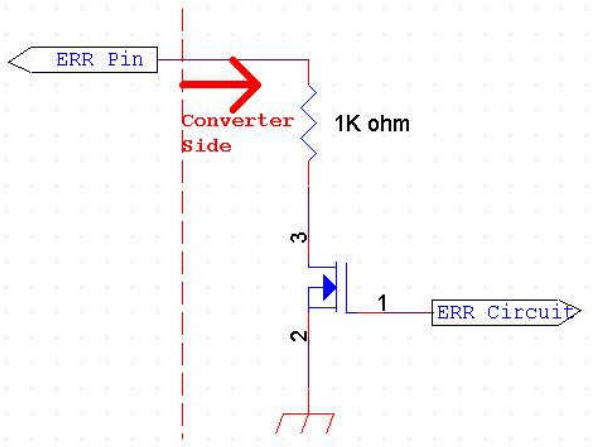

Fig. 2

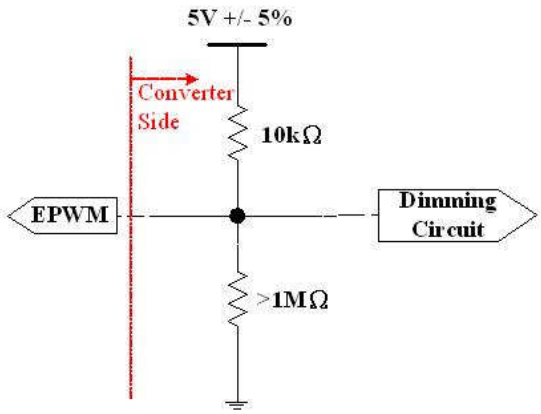

Fig. 3

The copyright belongs to InnoLux. Any unauthorized use is prohibited

4 .INPUT TERMINAL PIN ASSIGNMENT

4.1 TFT LCD MODULE

CNC06 Connector Pin Assignment: [187059-51221(P-TWO), WF23-402-5133(FCN)]

Matting Connector: [FI-RE51HL (JAE)]

Pin	Name	Description	Note
1	Vin	Power input (+12V)	(5)
2	Vin	Power input (+12V)	
3	Vin	Power input (+12V)	
4	Vin	Power input (+12V)	
5	Vin	Power input (+12V)	
6	Vin	Power input (+12V)	
7	Vin	Power input (+12V)	
8	Vin	Power input (+12V)	
9	N.C.	No Connection	(4)
10	GND	Ground	
11	GND	Ground	
12	GND	Ground	
13	GND	Ground	
14	GND	Ground	
15	N.C.	No Connection	(4)
16	N.C.	No Connection	(4)
17	N.C.	No Connection	(4)
18	N.C.	No Connection	(4)
19	N.C.	No Connection	(4)
20	N.C.	No Connection	(4)
21	Vsync	Vsync (for Converter)	
22	N.C.	No Connection	(4)
23	N.C.	No Connection	(4)
24	N.C.	No Connection	(4)
25	HTPDN	Hot plug detect output. (Optional)	(6)
26	LOCKN	Lock detect output, Open drain.	
27	GND	Ground	
28	RX0N	1ST Pixel Negative V-by-One differential data input in area A. Lane 0	(1)
29	RX0P	1ST Pixel Positive V-by-One differential data input in area A. Lane 0	
30	GND	Ground	
31	RX1N	2ND Pixel Negative V-by-One differential data input in area A. Lane 1	(1)
32	RX1P	2ND Pixel Positive V-by-One differential data input in area A. Lane 1	

The copyright belongs to InnoLux. Any unauthorized use is prohibited

33	GND	Ground	
34	RX2N	3RD Pixel Negative V-by-One differential data input in area A. Lane 2	(1)
35	RX2P	3RD Pixel Positive V-by-One differential data input in area A. Lane 2	
36	GND	Ground	
37	RX3N	4TH Pixel Negative V-by-One differential data input in area A. Lane 3	(1)
38	RX3P	4TH Pixel Positive V-by-One differential data input in area A. Lane 3	
39	GND	Ground	
40	RX4N	5TH Pixel Negative V-by-One differential data input in area A. Lane 4	(1)
41	RX4P	5TH Pixel Positive V-by-One differential data input in area A. Lane 4	
42	GND	Ground	
43	RX5N	6TH Pixel Negative V-by-One differential data input in area A. Lane 5	(1)
44	RX5P	6TH Pixel Positive V-by-One differential data input in area A. Lane 5	
45	GND	Ground	
46	RX6N	7TH Pixel Negative V-by-One differential data input in area A. Lane 6	(1)
47	RX6P	7TH Pixel Positive V-by-One differential data input in area A. Lane 6	
48	GND	Ground	
49	RX7N	8TH Pixel Negative V-by-One differential data input in area A. Lane 7	(1)
50	RX7P	8TH Pixel Positive V-by-One differential data input in area A. Lane 7	
51	GND	Ground	

Note (1) V-by-One^{R} HS Data Mapping

Area	Lane	Data Stream
A	Lane 0	1, 9, 17, ..., 3825, 3833
	Lane 1	2, 10, 18, ..., 3826, 3834
	Lane 2	3, 11, 19, ..., 3827, 3835
	Lane 3	4, 12, 20, ..., 3828, 3836
	Lane 4	5, 13, 21, ...,3829, 3837
	Lane 5	6, 14, 22, ..., 3830, 3838
	Lane 6	7, 15, 23, ..., 3831, 3839
	Lane7	8, 16, 24, ..., 3832, 3840

The copyright belongs to InnoLux. Any unauthorized use is prohibited

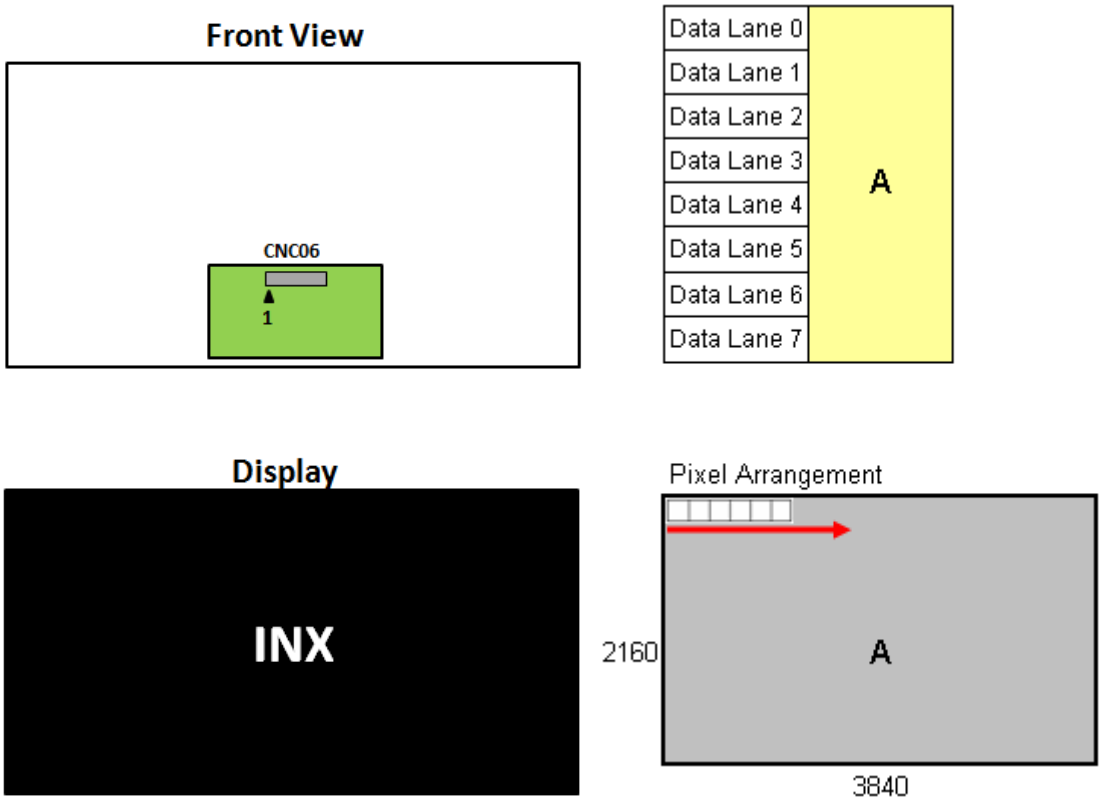

Note (2) V-by-One HS connector pin order defined as follows

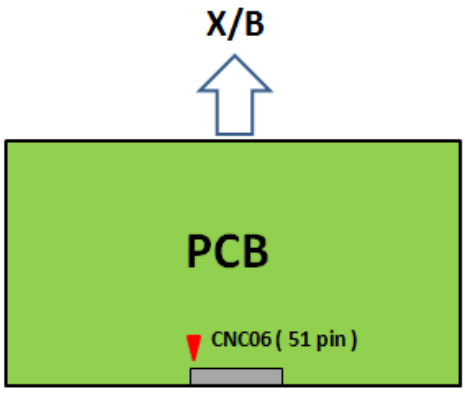

Note (3) V-by-One connector mating dimension range request is 0.93mm~1.0mm as below

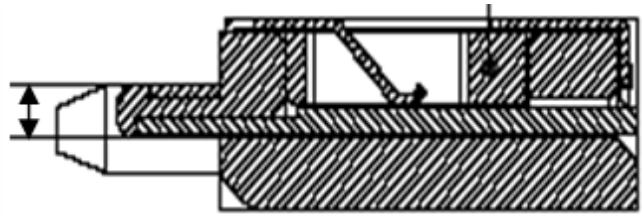

Note (4) Reserved for internal use. Please leave it open.

Note (5) Power input (+12V), Please check the current rating of FFC cable to meet the power consumption requirement.

Note (6) This pin connect to ground internal, but it could be open

The copyright belongs to InnoLux. Any unauthorized use is prohibited

4.2 BACKLIGHT UNIT

4.2.1 LIGHT BAR UNIT

The pin configuration for the housing and lead wire is shown in the table below.

CNV03 Connector Pin Assignment: [WM13-412-163N (FCN) & CI1416M1HRM-NH (CVILUX)]

Pin №	Symbol	Feature
1	VLED+	Positive of LED String
2		
3		
4		
5		
6		
7		
8	NC	NC
9		
10	N10	Negative of LED String
11	N11	
12	N12	
13	N13	
14	N14	
15	N15	
16	N16	

The copyright belongs to InnoLux. Any unauthorized use is prohibited

CNV04 Connector Pin Assignment: [WM13-412-163N (FCN) & CI1416M1HRM-NH (CVILUX)]

Pin №	Symbol	Feature
1	VLED+	Positive of LED String
2		
3		
4		
5		
6		
7		
8	NC	NC
9		
10	N2	Negative of LED String
11	N3	
12	N4	
13	N5	
14	N6	
15	N7	
16	N8	

The copyright belongs to InnoLux. Any unauthorized use is prohibited

4.2.2 CONVERTER UNIT

CNV01 Connector Pin Assignment: [CI0114M1HR0-LA (CvilLux) , JH2-D4-143N (FCN)]

Matting connector : [JST PHR-14]

Pin No.	Symbol	Feature
1	VBL	+24V
2		
3		
4		
5		
6	GND	GND
7		
8		
9		
10		
11	ERR	Normal (GND) ; Abnormal (Open collector)
12	BLON	BL ON/OFF
13	NC	NC
14	E_PWM	External PWM Control

Note (1) If Pin14 is open, E_PWM is 100% duty.

Note (2) Input connector pin order defined as follows

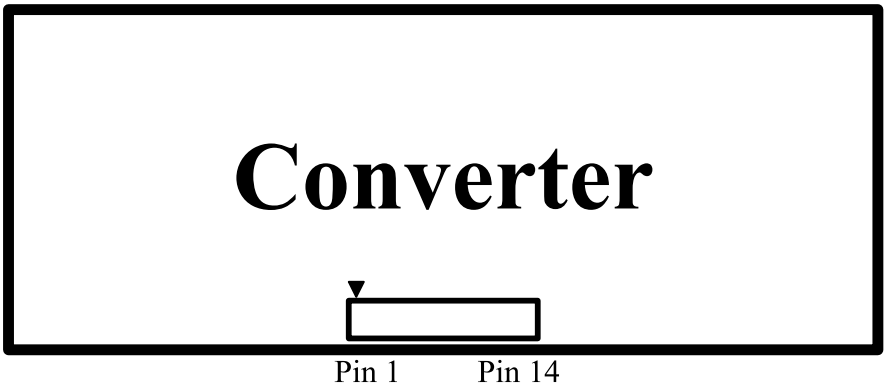

Input Connector

The copyright belongs to InnoLux. Any unauthorized use is prohibited

CNV02 Connector Pin Assignment: [CI0112M1HR0-LA (CvilLux) or JH2-D4-123N (FCN)]
Matting connector : [JST PHR-12]

Pin No.	Symbol	Feature
1	VBL	+24V
2		
3		
4		
5		
6	GND	GND
7		
8		
9		
10		
11	NC	NC
12	NC	NC

Note (1) Input connector pin order defined as follows

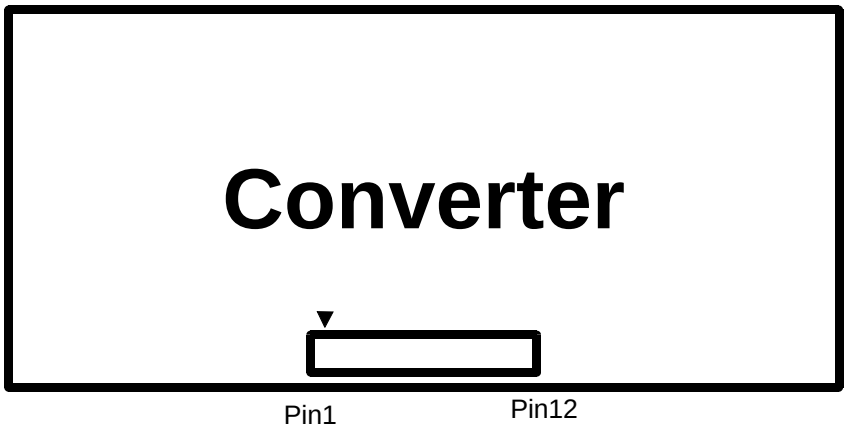

Input Connector

The copyright belongs to InnoLux. Any unauthorized use is prohibited

4.3 COLOR DATA INPUT ASSIGNMENT

The brightness of each primary color (red, green and blue) is based on the 10-bit gray scale data input for the color. The higher the binary input the brighter the color. The table below provides the assignment of color versus data input.

Color		Data Signal																													
		Red										Green										Blue									
		R9	R8	R7	R6	R5	R4	R3	R2	R1	R0	G9	G8	G7	G6	G5	G4	G3	G2	G1	G0	B9	B8	B7	B6	B5	B4	B3	B2	B1	B0
Basic Colors	Black	0	0	0	0	0	0	0	0	0	0	0	0	0	0	0	0	0	0	0	0	0	0	0	0	0	0	0	0	0	0
	Red	1	1	1	1	1	1	1	1	1	1	0	0	0	0	0	0	0	0	0	0	0	0	0	0	0	0	0	0	0	0
	Green	0	0	0	0	0	0	0	0	0	0	1	1	1	1	1	1	1	1	1	1	0	0	0	0	0	0	0	0	0	0
	Blue	0	0	0	0	0	0	0	0	0	0	0	0	0	0	0	0	0	0	0	0	1	1	1	1	1	1	1	1	1	1
	Cyan	0	0	0	0	0	0	0	0	0	0	1	1	1	1	1	1	1	1	1	1	1	1	1	1	1	1	1	1	1	1
	Magenta	1	1	1	1	1	1	1	1	1	1	0	0	0	0	0	0	0	0	0	0	1	1	1	1	1	1	1	1	1	1
	Yellow	1	1	1	1	1	1	1	1	1	1	1	1	1	1	1	1	1	1	1	1	0	0	0	0	0	0	0	0	0	0
	White	1	1	1	1	1	1	1	1	1	1	1	1	1	1	1	1	1	1	1	1	1	1	1	1	1	1	1	1	1	1
Gray Scale Of Red	Red (0) / Dark	0	0	0	0	0	0	0	0	0	0	0	0	0	0	0	0	0	0	0	0	0	0	0	0	0	0	0	0	0	0
	Red (1)	0	0	0	0	0	0	0	0	1	0	0	0	0	0	0	0	0	0	0	0	0	0	0	0	0	0	0	0	0	0
	Red (2)	0	0	0	0	0	0	0	1	0	0	0	0	0	0	0	0	0	0	0	0	0	0	0	0	0	0	0	0	0	0
	:			:	:	:	:	:	:	:	:	:	:	:	:	:	:	:	:	:	:	:	:	:	:	:	:	:	:	:	:
	:			:	:	:	:	:	:	:	:	:	:	:	:	:	:	:	:	:	:	;	:	:	:	:	:	:	:	:	:
	Red (1021)	1	1	1	1	1	1	1	1	0	1	0	0	0	0	0	0	0	0	0	0	0	0	0	0	0	0	0	0	0	0
	Red (1022)	1	1	1	1	1	1	1	1	1	0	0	0	0	0	0	0	0	0	0	0	0	0	0	0	0	0	0	0	0	0
	Red (1023)	1	1	1	1	1	1	1	1	1	1	0	0	0	0	0	0	0	0	0	0	0	0	0	0	0	0	0	0	0	0
Gray Scale Of Green	Green (0) / Dark	0	0	0	0	0	0	0	0	0	0	0	0	0	0	0	0	0	0	0	0	0	0	0	0	0	0	0	0	0	0
	Green (1)	0	0	0	0	0	0	0	0	0	0	0	0	0	0	0	0	0	0	0	1	0	0	0	0	0	0	0	0	0	0
	Green (2)	0	0	0	0	0	0	0	0	0	0	0	0	0	0	0	0	0	0	1	0	0	0	0	0	0	0	0	0	0	0
	:	:	:	:	:	:	:	:	:	:	:	:	:	:	:	:	:	:	:	:	:	:	:	:	:	:	:	:	:	:	:
	:	:	:	:	:	:	:	:	:	:	:	:	:	:	:	:	:	:	:	:	:	:	:	:	:	:	:	:	:	:	:
	Green (1021)	0	0	0	0	0	0	0	0	0	0	1	1	1	1	1	1	1	1	0	1	0	0	0	0	0	0	0	0	0	0
	Green (1022)	0	0	0	0	0	0	0	0	0	0	1	1	1	1	1	1	1	1	1	0	0	0	0	0	0	0	0	0	0	0
	Green (1023)	0	0	0	0	0	0	0	0	0	0	1	1	1	1	1	1	1	1	1	1	0	0	0	0	0	0	0	0	0	0
Gray Scale Of Blue	Blue (0) / Dark	0	0	0	0	0	0	0	0	0	0	0	0	0	0	0	0	0	0	0	0	0	0	0	0	0	0	0	0	0	0
	Blue (1)	0	0	0	0	0	0	0	0	0	0	0	0	0	0	0	0	0	0	0	0	0	0	0	0	0	0	0	0	0	1
	Blue (2)	0	0	0	0	0	0	0	0	0	0	0	0	0	0	0	0	0	0	0	0	0	0	0	0	0	0	0	0	1	0
	:	:	:	:	:	:	:	:	:	:	:	:	:	:	:	:	:	:	:	:	:	:	:	:	:	:	:	:	:	:	:
	:	:	:	:	:	:	:	:	:	:	:	:	:	:	:	:	:	:	:	:	:	:	:	:	:	:	:	:	:	:	:
	Blue (1021)	0	0	0	0	0	0	0	0	0	0	0	0	0	0	0	0	0	0	0	0	1	1	1	1	1	1	1	1	0	1
	Blue (1022)	0	0	0	0	0	0	0	0	0	0	0	0	0	0	0	0	0	0	0	0	1	1	1	1	1	1	1	1	1	0
	Blue (1023)	0	0	0	0	0	0	0	0	0	0	0	0	0	0	0	0	0	0	0	0	1	1	1	1	1	1	1	1	1	1

Note (1) 0: Low Level Voltage，1: High Level Voltage

The copyright belongs to InnoLux. Any unauthorized use is prohibited

5. INTERFACE TIMING

5.1 INPUT SIGNAL TIMING SPECIFICATIONS

The input signal timing specifications are shown as the following table and timing diagram. (Ta = 25 ± 2 °C)

Signal	Item	Symbol	Min.	Typ.	Max.	Unit	Note
Frequency	Data Clock	1/Tc	70	74.25	80	MHZ	(1)
V-by-One Receiver	Intra-Pair skew		-0.3	—	0.3	UI	(2)
	Inter-pair skew		-5	—	5	UI	(3)
	Spread spectrum modulation range	F_{clkin_mod}	1/Tc-0.5%	—	1/Tc+0.5%	MHz	(4)
	Spread spectrum modulation frequency	F_{SSM}	—	—	30	KHz	

5.1.1 Timing spec for QFHD Frame Rate = 50Hz

Signal	Item		Symbol	Min.	Typ.	Max.	Unit	Note
Frame rate	2D mode		Fr	47	50	53	Hz	(5),(6)
Horizontal Frequency			Fh	122.8	135	140	KHz	
Vertical Active Display Term (8 Lane,3840X2160 Active Area)	2D Mode	Total	Tv	2200	2700	2790	Th	Tv=Tvd+Tvb
		Display	Tvd	2160			Th	
		Blank	Tvb	40	540	630	Th	
Horizontal Active Display Term (8 Lane,3840X2160 Active Area)	2D Mode	Total	Th	530	550	570	Tc	Th=Thd+Thb
		Display	Thd	480			Tc	
		Blank	Thb	50	70	90	Tc	

The copyright belongs to InnoLux. Any unauthorized use is prohibited

5.1.2 Timing spec for QFHD Frame Rate = 60Hz

Signal	Item		Symbol	Min.	Typ.	Max.	Unit	Note
Frame Rate	2D Mode		F_r	57	60	63	Hz	(5),(6)
Horizontal Frequency			Fh	122.8	135	140	KHz	
Vertical Active Display Term (8 Lane,3840X2160 Active Area)	2D Mode	Total	Tv	2200	2250	2790	Th	Tv=Tvd+Tvb
		Display	Tvd	2160			Th	
		Blank	Tvb	40	90	630	Th	
Horizontal Active Display Term (8 Lane,3840X2160 Active Area)	2D Mode	Total	Th	530	550	570	Tc	Th=Thd+Thb
		Display	Thd	480			Tc	
		Blank	Thb	50	70	90	Tc	

Note (1) Please make sure the range of pixel clock has follow the below equation：

Fclkin(max) ≧ Fr ╳ Tv ╳ Th

Fr ╳ Tv ╳ Th ≧ Fclkin (min)

INPUT SIGNAL TIMING DIAGRAM

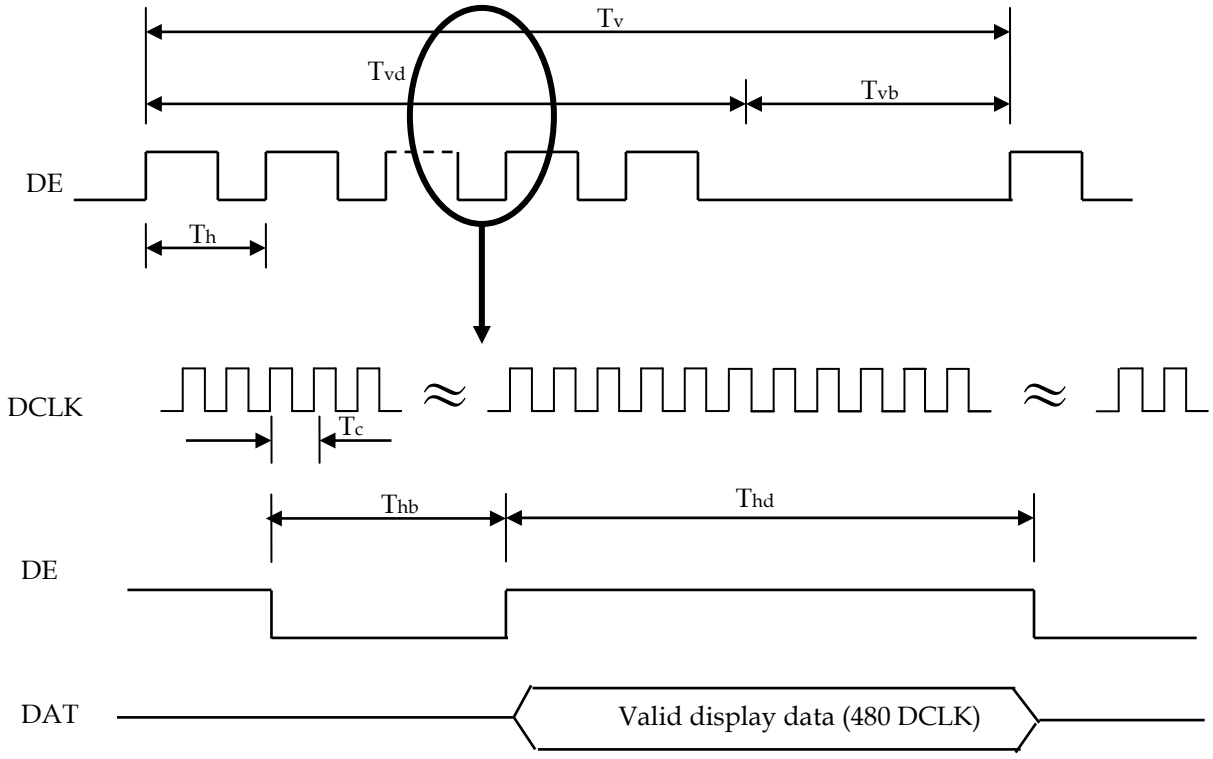

The copyright belongs to InnoLux. Any unauthorized use is prohibited

Note (2) V-by-One HS Intra-pair Data skew

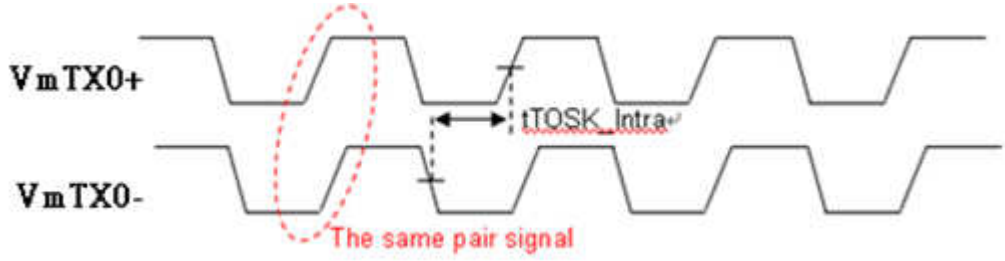

Note (3) V-by-One HS Inter-pair skew.

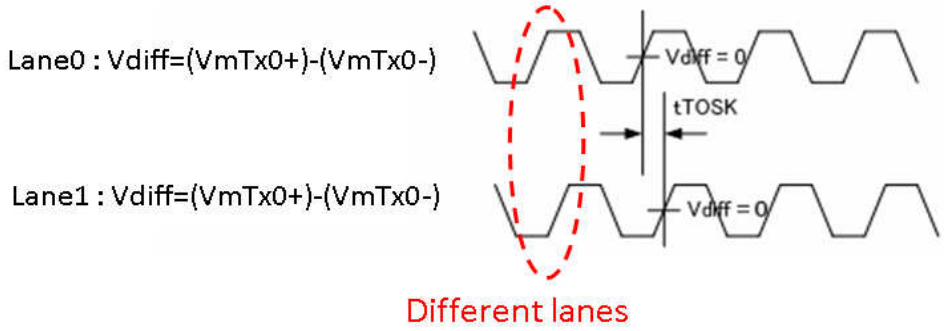

Note (4) The SSCG (Spread spectrum clock generator) is defined as below figures.

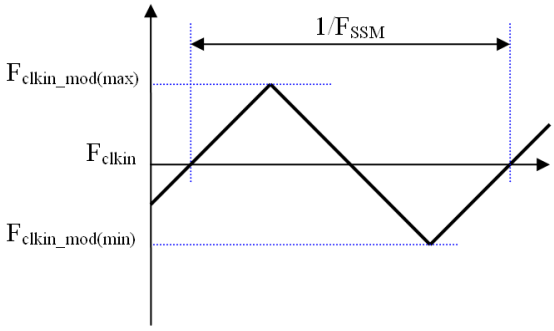

Note (5) For converter reference signals, the frame-to-frame jitter of the input frame rate is defined as the above figures. FRn = FRn-1 ± 1.8%

Note (6) For converter reference signals, The setup of the frame rate jitter > 1.8% may result in the cosmetic LED backlight symptom.

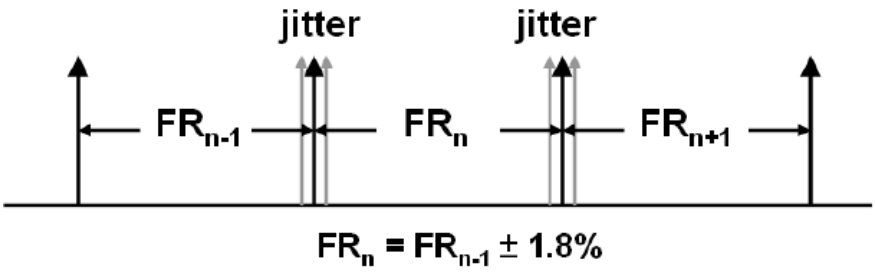

The copyright belongs to InnoLux. Any unauthorized use is prohibited

5.2 Timing Dragram

5.2.1 V by One Input Signal Timing Diagram

The eye diagram is measured by the oscilloscope and receiver CDR characteristic must be emulated.

PLL bandwidth : 15MHZ

Damping facto : 1.4

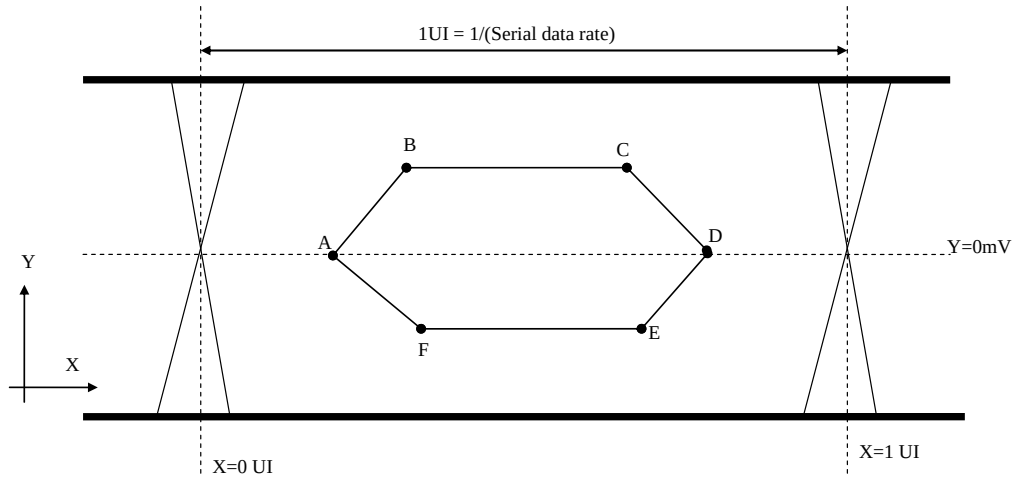

Table 1 Eye Mask Specification

	X [UI]	Y [mV]	Note
A	0.25	0	(1)
B	0.3	50	(1)
C	0.7	50	(1)
D	0.75	0	(1)
E	0.7	-50	(1)
F	0.3	-50	(1)

Note (1) Input levels of V-by-One HS signals are comes from "V-by-One HS Stander Ver.1.4"

The copyright belongs to InnoLux. Any unauthorized use is prohibited

5.3 Byte Length and Color mapping of V-by-One HS

Packer input & Unpacker output		30bpp RGB (10bit)
Byte 0	D[0]	R[2]
	D[1]	R[3]
	D[2]	R[4]
	D[3]	R[5]
	D[4]	R[6]
	D[5]	R[7]
	D[6]	R[8]
	D[7]	R[9]
Byte 1	D[8]	G[2]
	D[9]	G[3]
	D[10]	G[4]
	D[11]	G[5]
	D[12]	G[6]
	D[13]	G[7]
	D[14]	G[8]
	D[15]	G[9]
Byte 2	D[16]	B[2]
	D[17]	B[3]
	D[18]	B[4]
	D[19]	B[5]
	D[20]	B[6]
	D[21]	B[7]
	D[22]	B[8]
	D[23]	B[9]
Byte 3	D[24]	X
	D[25]	X
	D[26]	B[0]
	D[27]	B[1]
	D[28]	G[0]
	D[29]	G[1]
	D[30]	R[0]
	D[31]	R[1]

The copyright belongs to InnoLux. Any unauthorized use is prohibited

5.4 POWER ON/OFF SEQUENCE

To prevent a latch-up or DC operation of LCD module, the power on/off sequence should be as the diagram below.

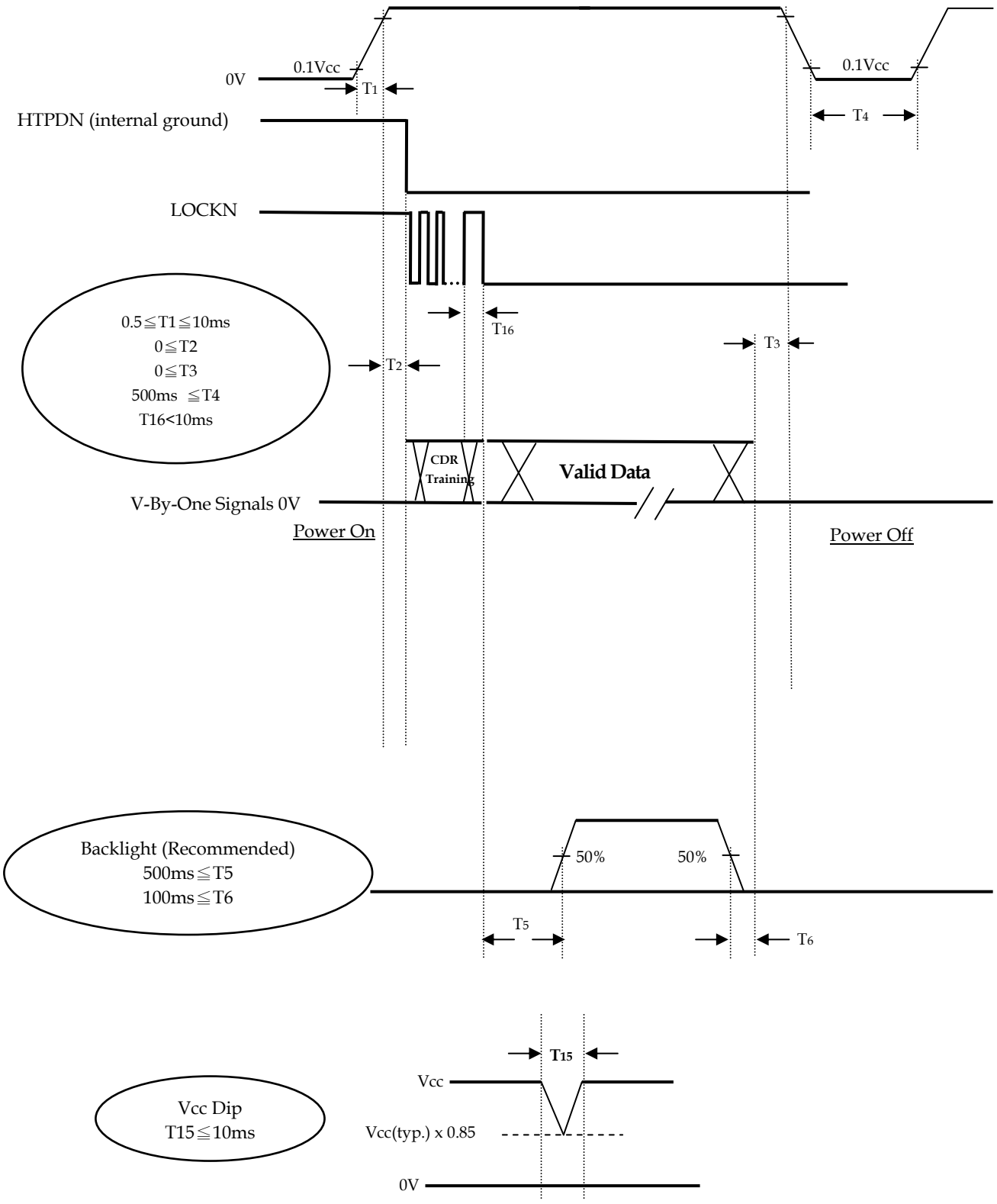

The copyright belongs to InnoLux. Any unauthorized use is prohibited

Note (1) The supply voltage of the external system for the module input should follow the definition of Vcc.

Note (2) Apply the LED voltage within the LCD operation range. When the backlight turns on before the LCD operation or the LCD turns off before the backlight turns off, the display may momentarily become abnormal screen.

Note (3) In case of Vcc is in off level, please keep the level of input signals on the low or high impedance besides HTPDN and LOCKN. If T2<0, that maybe cause electrical overstress failure.

Note (4) T4 should be measured after the module has been fully discharged between power off and on period.

Note (5) Interface signal shall not be kept at high impedance when the power is on.

Note (6) Vcc must decay smoothly when power-off.

Note (7) HTPDN(internal ground) : For customer reference signal. It can be ignored if customer not use.

Note (8) T16 , V-by-One signals shall be stabilized and follows timing specification which defined by section 5.1&5.2

The copyright belongs to InnoLux. Any unauthorized use is prohibited

6. OPTICAL CHARACTERISTICS

6.1 TEST CONDITIONS

Item	Symbol	Value	Unit
Ambient Temperature	Ta	25±2	°C
Ambient Humidity	Ha	50±10	%RH
Supply Voltage	V_{CC}	12±1.2	V
Input Signal	According to typical value in "3. ELECTRICAL CHARACTERISTICS"		
Vertical Frame Rate	Fr	60	Hz

The LCD module should be stabilized at given temperature for 1 hour to avoid abrupt temperature change during measuring in a windless room.

Local Dimming Function should be Disable before testing to get the steady optical characteristics (According to 5.1 CNF1 Connector Pin Assignment, Pin no. “42”)

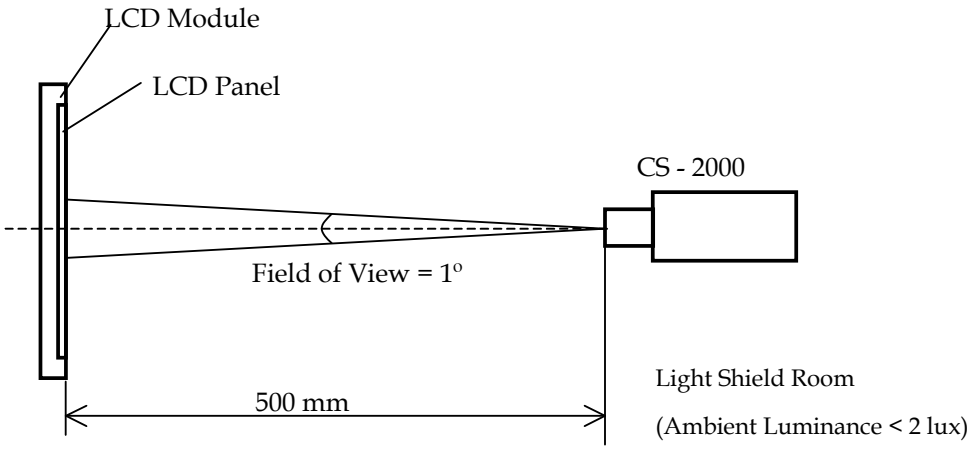

The copyright belongs to InnoLux. Any unauthorized use is prohibited

6.2 OPTICAL SPECIFICATIONS

The relative measurement methods of optical characteristics are shown in 6.2. The following items should be measured under the test conditions described in 6.1 and stable environment shown in 6.1.

Item		Symbol	Condition	Min.	Typ.	Max.	Unit	Note
Contrast Ratio		CR	θ_x=0°, θ_Y =0° Viewing angle at normal direction	3500	5000	-	-	Note (2)
Response Time		Gray to gray		-	9.5	19	ms	Note (3)
Center Luminance of White		L_C		400	500	-	cd/m²	Note (4)
White Variation		δW		-	-	1.3	-	Note (6)
Cross Talk		CT 2D		-	-	4	%	Note (5)
Color Chromaticity	Red	Rx		Typ.-0.03	0.646	Typ.+0.03	-	
		Ry			0.336		-	
	Green	Gx			0.307		-	
		Gy			0.628		-	
	Blue	Bx			0.153		-	
		By			0.045		-	
	White	Wx			0.280		-	
		Wy			0.290		-	
	Correlated color temperature			-	10000	-	K	
	Color Gamut	C.G.		-	72	-	%	NTSC
Viewing Angle	Horizontal	θ_x+	CR>10	80	89	-	Deg.	(1)
		θ_x-		80	89	-		
	Vertical	θ_Y+		80	89	-		
		θ_Y-		80	89	-		

The copyright belongs to InnoLux. Any unauthorized use is prohibited

Note (1) Definition of Viewing Angle (θx, θy) :

Viewing angles are measured by Autronic Conoscope Cono-80 (or Eldim EZ-Contrast 160R).

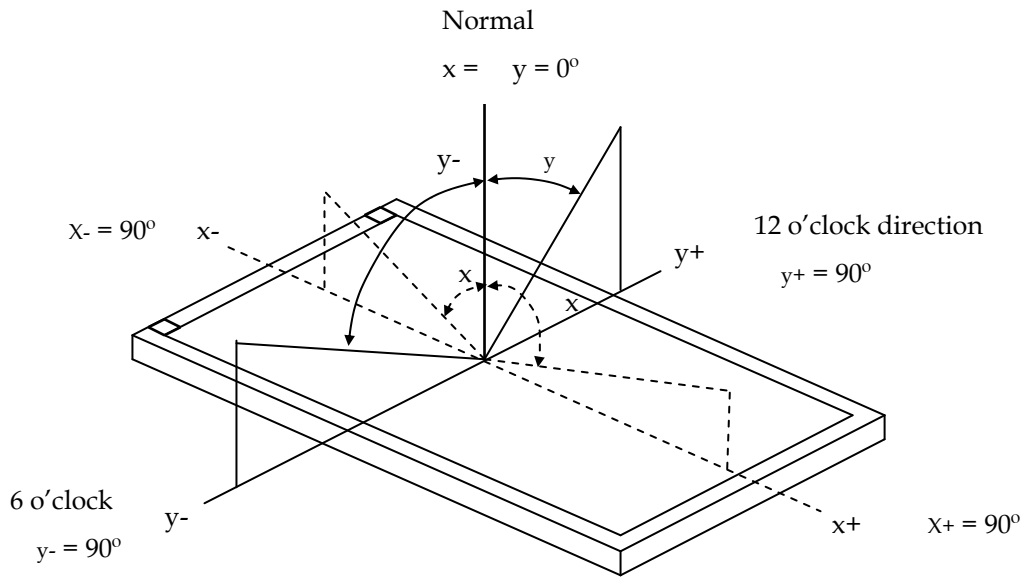

Note (2) Definition of Contrast Ratio (CR) :

The contrast ratio can be calculated by the following expression.

$$\text{Contrast Ratio (CR)} = \frac{\text{Surface Luminance of L1023}}{\text{Surface Luminance of L0}}$$

L1023: Luminance of gray level 1023

L 0: Luminance of gray level 0

CR = CR (5), where CR (X) is corresponding to the Contrast Ratio of the point X at the figure in Note (6).

Note (3) Definition of Gray-to-Gray Switching Time :

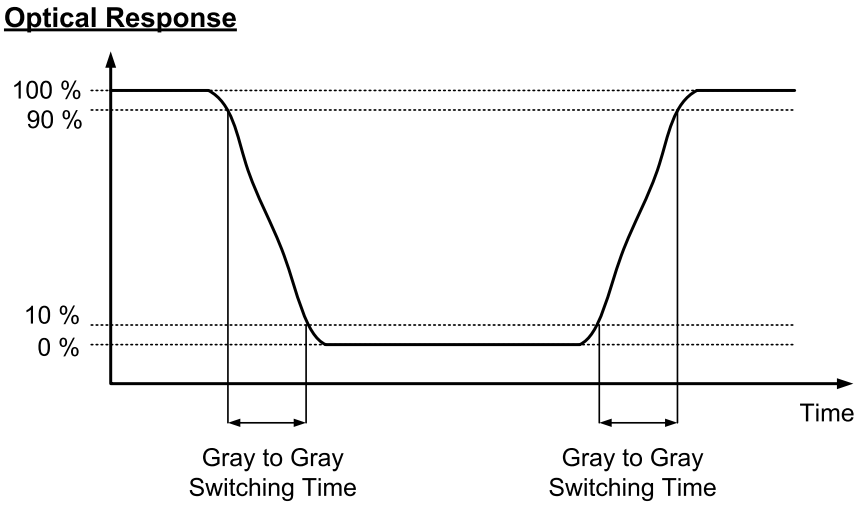

The driving signal means the signal of gray level 0, 124, 252, 380, 508, 636, 764, 892 and 1023.

Gray to gray average time means the average switching time of gray level 0, 124, 252, 380, 508, 636, 764, 892 and 1023 to each other.

The copyright belongs to InnoLux. Any unauthorized use is prohibited

Note (4) Definition of Luminance of White (L_C) :

Measure the luminance of gray level 1023 at center point.

L_C = L (5), where L (x) is corresponding to the luminance of the point X at the figure in Note (6).

Note (5) Definition of Cross Talk (CT) :

$CT = | Y_B - Y_A | / Y_A \times 100\ (\%)$

Where :

YA = Luminance of measured location without gray level 1023 pattern (cd/m2)

YB = Luminance of measured location with gray level 1023 pattern (cd/m2)

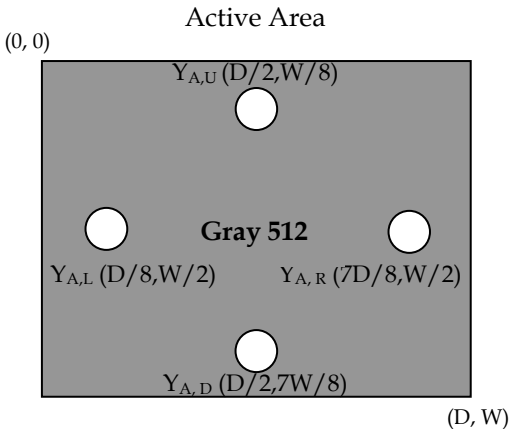

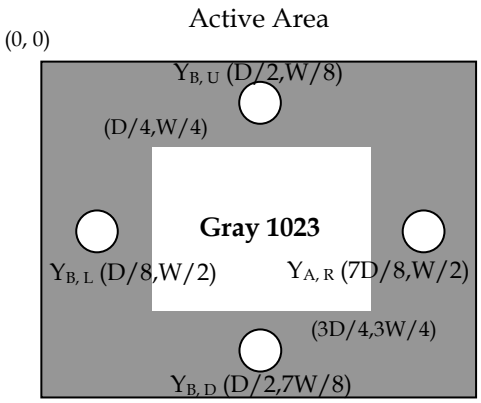

Note (6) Definition of White Variation (δW):

Measure the luminance of gray level 1023 at 5 points

$$\delta W = \frac{\text{Maximum [L (1), L (2), L (3), L (4), L (5)]}}{\text{Minimum [L (1), L (2), L (3), L (4), L (5)]}}$$

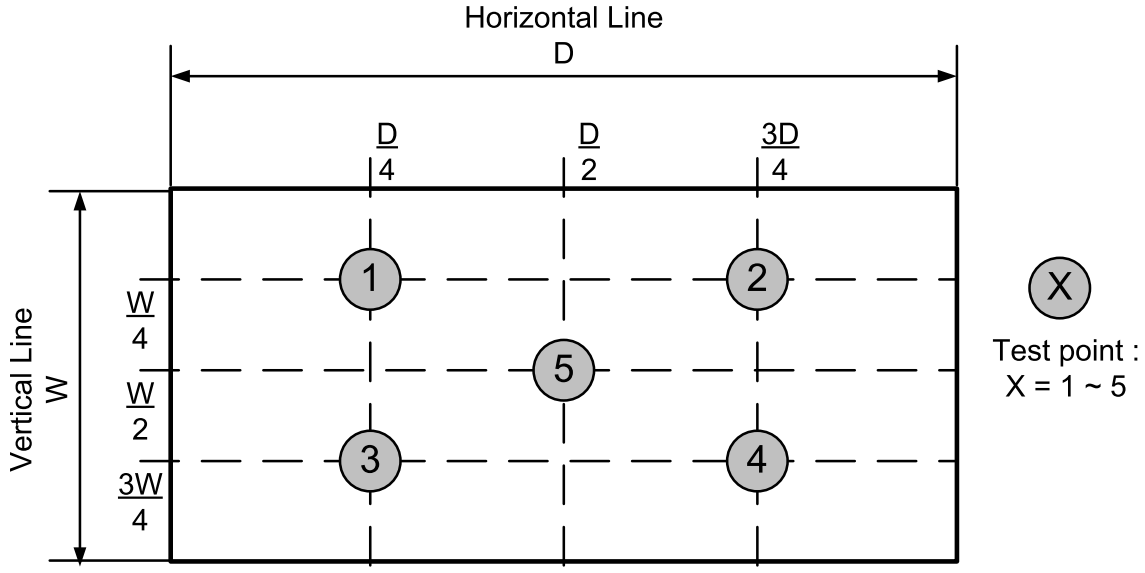

The copyright belongs to InnoLux. Any unauthorized use is prohibited

7. PRECAUTIONS

7.1 ASSEMBLY AND HANDLING PRECAUTIONS

[1] Do not apply rough force such as bending or twisting to the module during assembly.

[2] Do not apply pressure or impulse to the module to prevent the damage of LCD panel and Backlight.

[3] Bezel of Set can not press or touch the panel surface. It will make light leakage or scrape.

[4] It should be attached to the system firmly using all mounting holes.

[5] It is recommended to assemble or to install a module into the user's system in clean working areas. The dust and oil may cause electrical short or worsen the polarizer, do not press or scratch the surface harder than a HB pencil lead.

[6] Use finger-stalls with soft gloves in order to keep display clean during the incoming inspection and assembly process.

[7] Protection film for polarizer on the module should be slowly peeled off just before use so that the electrostatic charge can be minimized.

[8] Do not disassemble the module.

[9] Always follow the correct power-on sequence when the LCD module is turned on. This can prevent the damage and latch-up of the CMOS LSI chips.

[10] Do not plug in or pull out the I/F connector while the module is in operation, pins of I/F connector should not be touched directly with bare hands. Do not adjust the variable resistor located on the module.

[11] Moisture can easily penetrate into LCD module and may cause the damage during operation.

[12] When storing modules as spares for a long time, the following precaution is necessary.

[12.1] Do not leave the module in high temperature, and high humidity for a long time. It is highly recommended to store the module with temperature from 0 to 35℃ at normal humidity (under 70%) without condensation.

[12.2] The module shall be stored in dark place. Do not store the TFT-LCD module in direct sunlight or fluorescent light.

[13] When ambient temperature is lower than 10ºC, the display quality might be reduced. For example, the response time will become slow, and the starting voltage of LED will be higher than that of room temperature.

The copyright belongs to InnoLux. Any unauthorized use is prohibited

7.2 SAFETY PRECAUTIONS

To optimize PID module's lifetime and functions, operating conditions should be followed as below

[1] Normal operating condition

[1.1] Temperature : 20±15℃

[1.2] Humidity : 55±20%

[1.3] Well-ventilated place is suggested to set up PID module and system.

[1.4] Display pattern : regular switched patterns or moving pictures.

[2] Operation usage to protect against image sticking due to long-term static display.

[2.1] Suitable operating time : under 24 hours a day.

(* The moving picture can be allowed for 24 hours a day)

[2.2]Liquid Crystal refresh time is required. Cycling display between 5 minutes' information (static) display and 10 seconds' moving image.

[2.3] Periodical display contents should be changed from static image to moving picture.

[2.3.1] Different background and image colors changed respectively, and changed colors periodically.

[2.3.2] Background and image with large different luminance displayed at the same time should be avoided.

[2.3.3] Periodical power-off the system for a while or screen saver is needed after long-term static display.

[2.3.4] Moving picture or black pattern is strongly recommended for screen saver.

[3] The startup voltage of a Backlight may cause an electrical shock while assembling with the converter. Do not disassemble the module or insert anything into the Backlight unit.

[4] Do not connect or disconnect the module in the "Power On" condition.

[5] Do not exceed the absolute maximum rating value. (supply voltage variation, input voltage variation, variation in part contents and environmental temperature…) Otherwise the module may be damaged.

[6] If the liquid crystal material leaks from the panel, it should be kept away from the eyes or mouth. In case of contact with hands, skin or clothes, it has to be washed away thoroughly with soap.

[7] Module should be turned counterclockwise (regular front view perspective) when used in portrait mode.

[8] Ultra-violet ray filter is necessary for outdoor operation.

[9] Only when PID module is operated under right operating conditions, lifetime in this spec can be guaranteed. After the module's end of life, it is not harmful in case of normal operation and storage.

The copyright belongs to InnoLux. Any unauthorized use is prohibited

7.3 SAFETY STANDARDS

The LCD module should be certified with safety regulations as follows:

Regulatory	Item	Standard
Information Technology equipment	UL	UL60950-1:2006 or Ed.2:2007
	cUL	CAN/CSA C22.2 No.60950-1-03 or 60950-1-07
	CB	IEC60950-1:2005 / EN60950-1:2006+ A11:2009
Audio/Video Apparatus	UL	UL60065 Ed.7:2007
	cUL	CAN/CSA C22.2 No.60065-03:2006 + A1:2006
	CB	IEC60065:2001+ A1:2005 / EN60065:2002 + A1:2006+ A11:2008

If the module displays the same pattern for a long period of time, the phenomenon of image sticking may be occurred.

The copyright belongs to InnoLux. Any unauthorized use is prohibited

8. DEFINITION OF LABELS

8.1 MODULE LABEL

The barcode nameplate is pasted on each module as illustration, and its definitions are as following explanation.

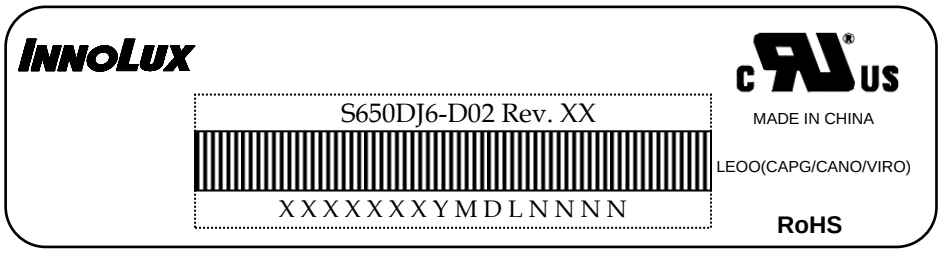

Model Name : S650DJ6-D02

Revision : Rev. XX, for example: A0, A1… B1, B2… or C1, C2…etc.

Serial ID : X X X X X X Y M D L N N N N

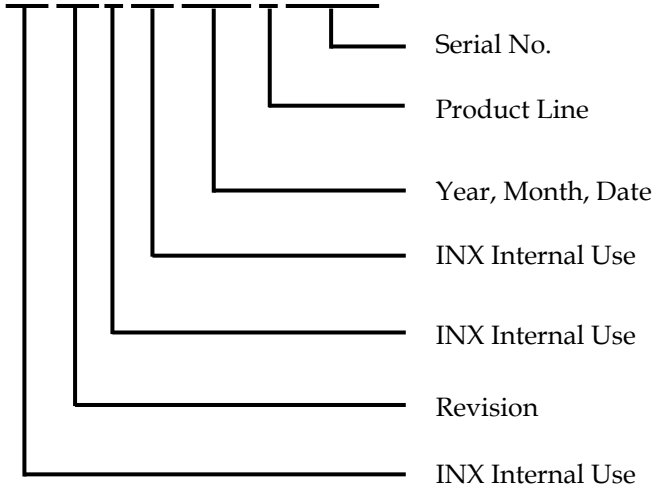

Serial ID includes the information as below :

Manufactured Date :

Year : 2001=1, 2002=2, 2003=3, 2004=4…2010=0, 2011=1, 2012=2…

Month: 1~9, A~C, for Jan. ~ Dec.

Day: 1~9, A~Y, for 1st to 31st, exclude I ,O, and U.

Revision Code : Cover all the change

Serial No. : Manufacturing sequence of product

Product Line : 1→Line1, 2→Line 2, …etc.

The copyright belongs to InnoLux. Any unauthorized use is prohibited

8.2 CARTON LABEL

The barcode nameplate is pasted on each box as illustration, and its definitions are as following explanation.

P.O. NO._____

Parts ID._____

Model Name S650DJ6-D02

Carton ID._____ Quantities ___

XXXXXXXXXXXXX

Made In Taiwan (Made In China)

Model Name: S650DJ6– D02

Carton ID: X X X X X X X Y M D X X X X

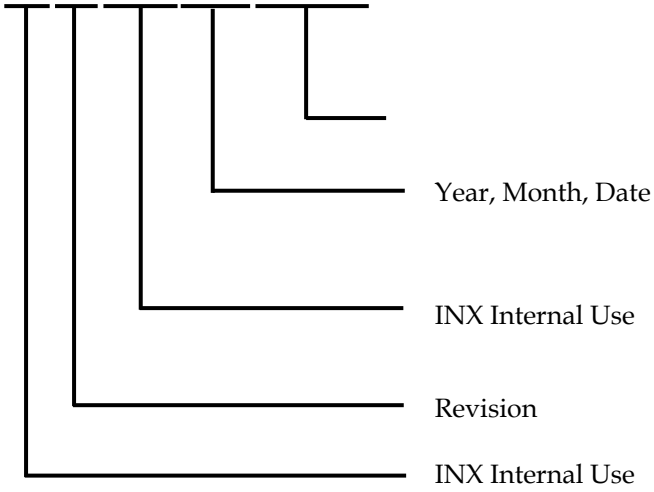

Serial ID includes the information as below :

Manufactured Date:

Year: 2010=0, 2011=1, 2012=2…etc.

Month: 1~9, A~C, for Jan. ~ Dec.

Day: 1~9, A~Y, for 1st to 31st, exclude I ,O, and U.

Revision Code: Cover all the change

The copyright belongs to InnoLux. Any unauthorized use is prohibited

9. PACKAGING

9.1 PACKAGING SPECIFICATIONS

(1) 4 LCD TV modules / 1 Box

(2) Box dimensions : 1639(L) X 565 (W) X 925 (H)

(3) Weight: approximately 90 Kg

9.2 PACKAGING METHOD

Packaging method is shown in following figures 9-1~9-2.

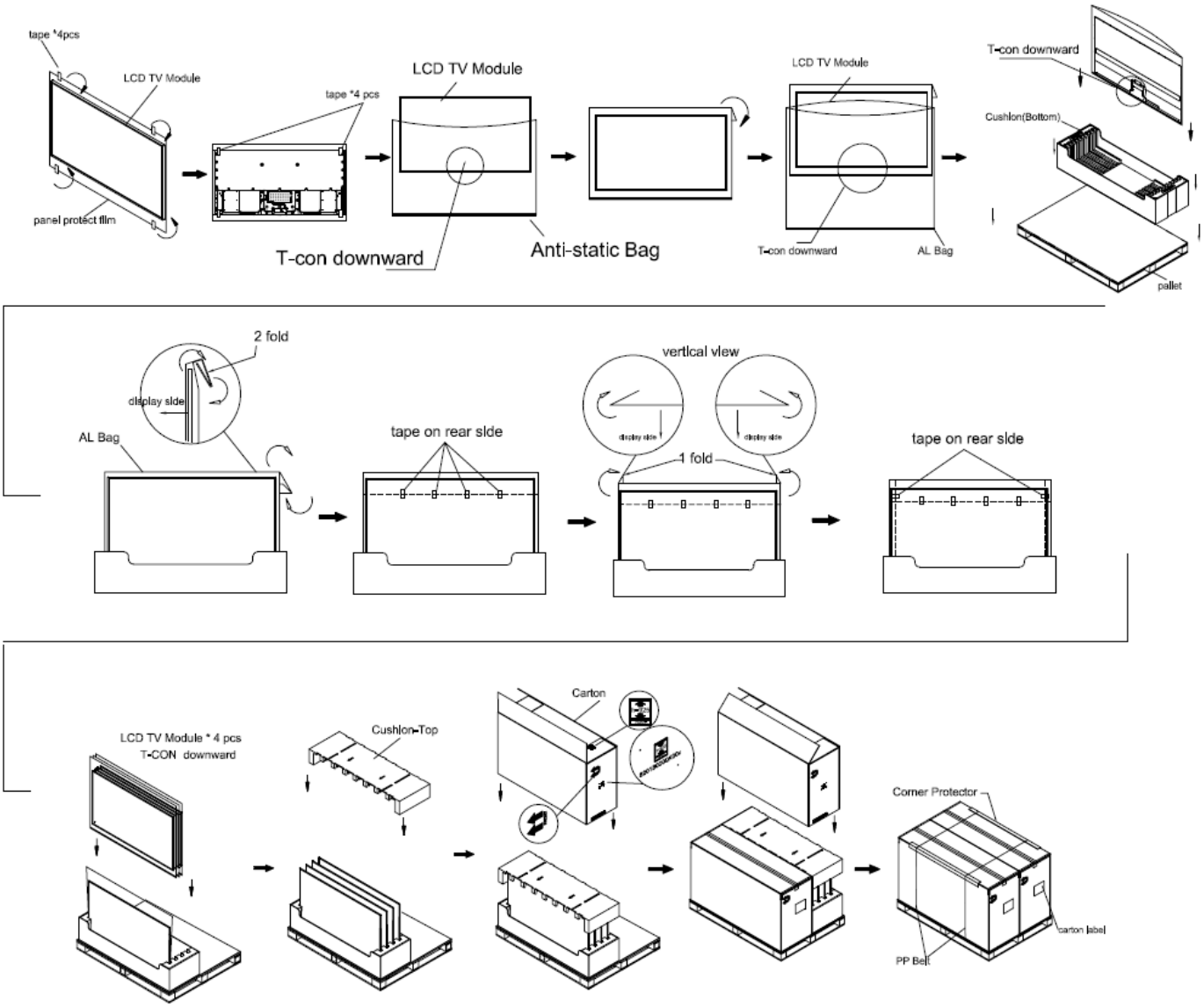

Figure 9-1 packaging method

The copyright belongs to InnoLux. Any unauthorized use is prohibited

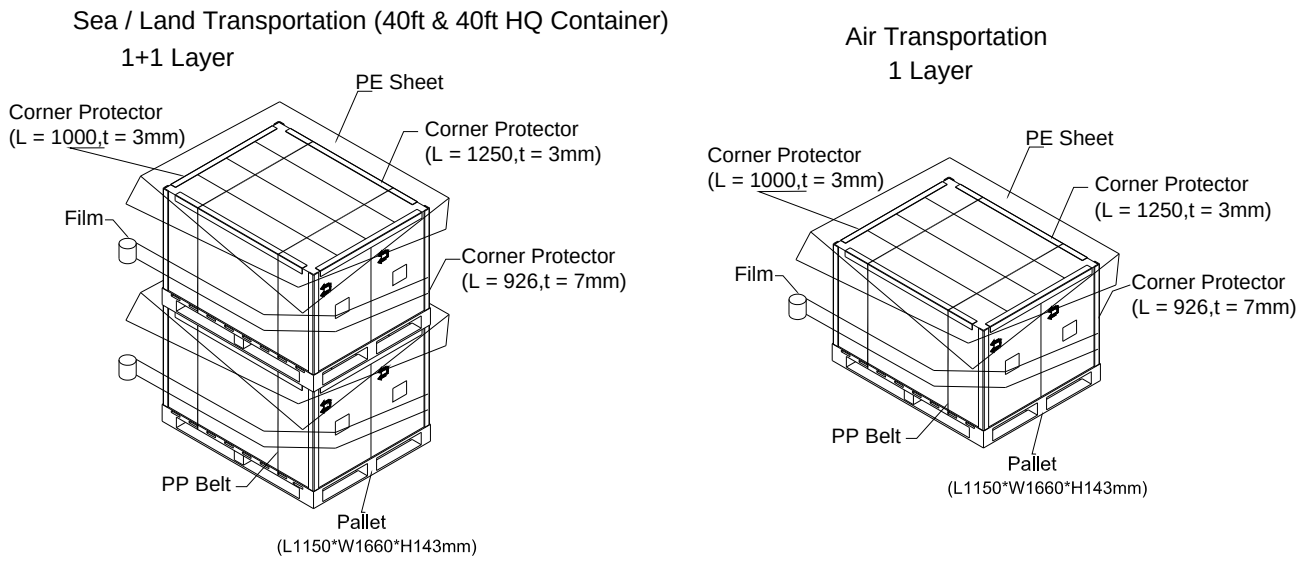

Figure 9-2 packaging method

9.3 UN-PACKAGING METHOD

Un-packaging method is shown in following figures 9-3 .

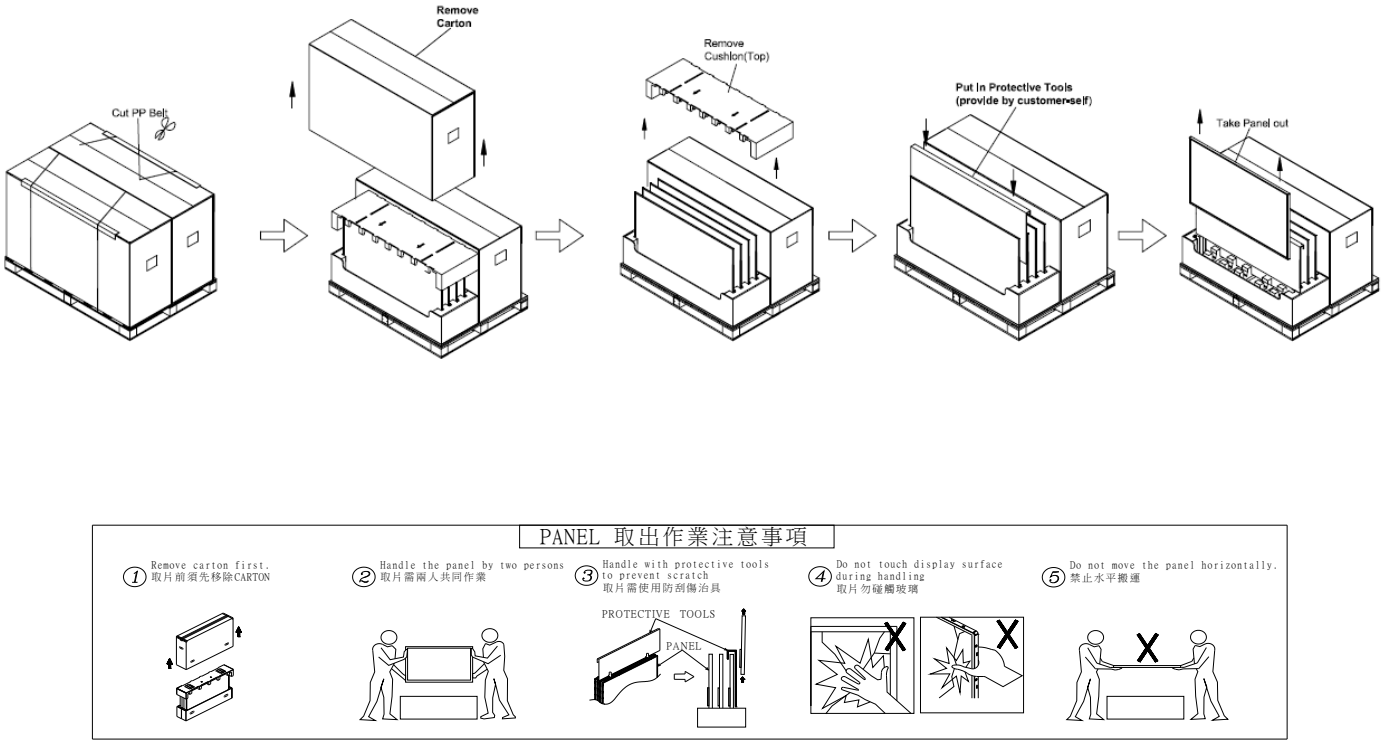

Figure 9-3 un-packaging method

The copyright belongs to InnoLux. Any unauthorized use is prohibited

10. MECHANICAL CHARACTERISTIC

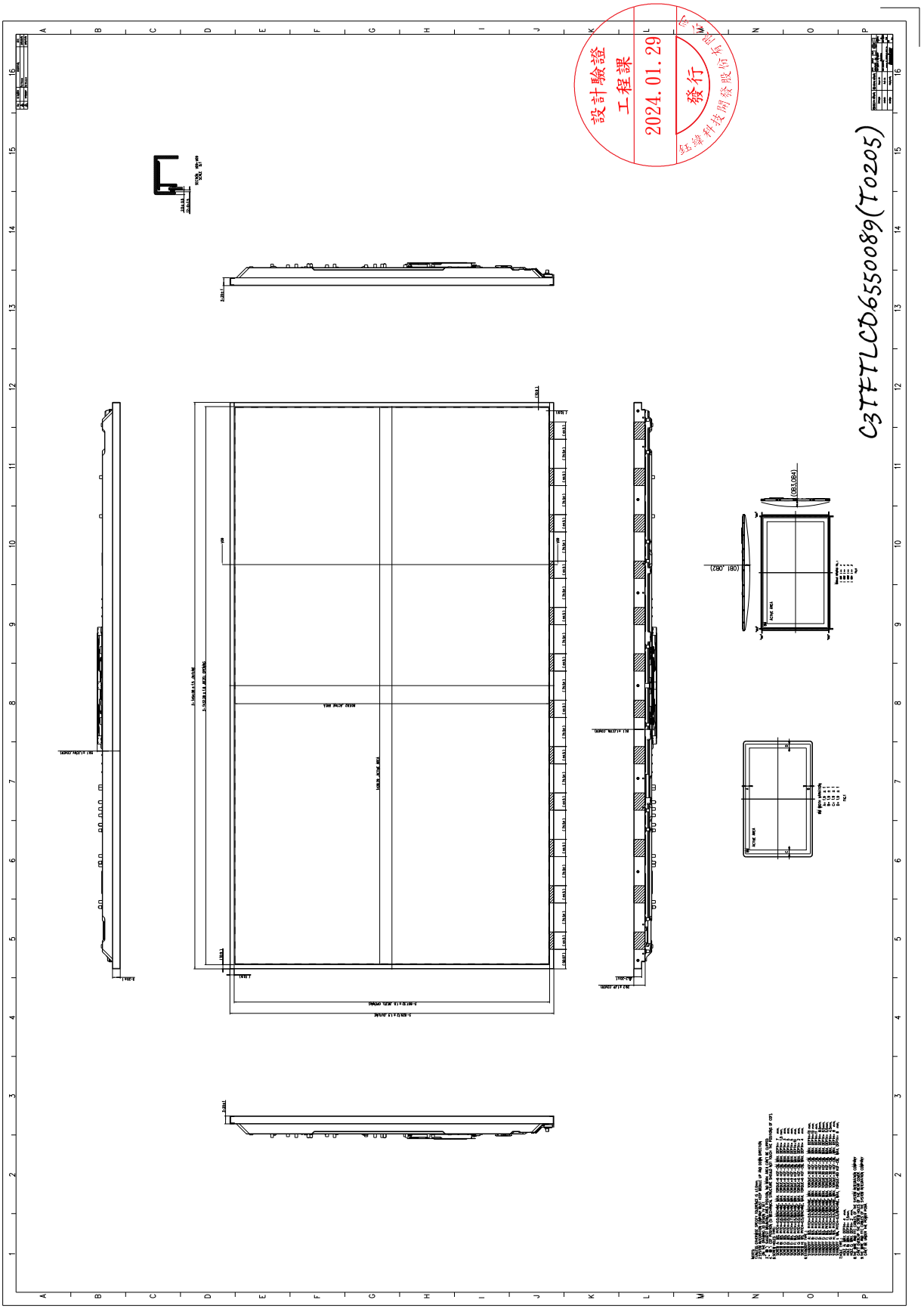

The copyright belongs to InnoLux. Any unauthorized use is prohibited

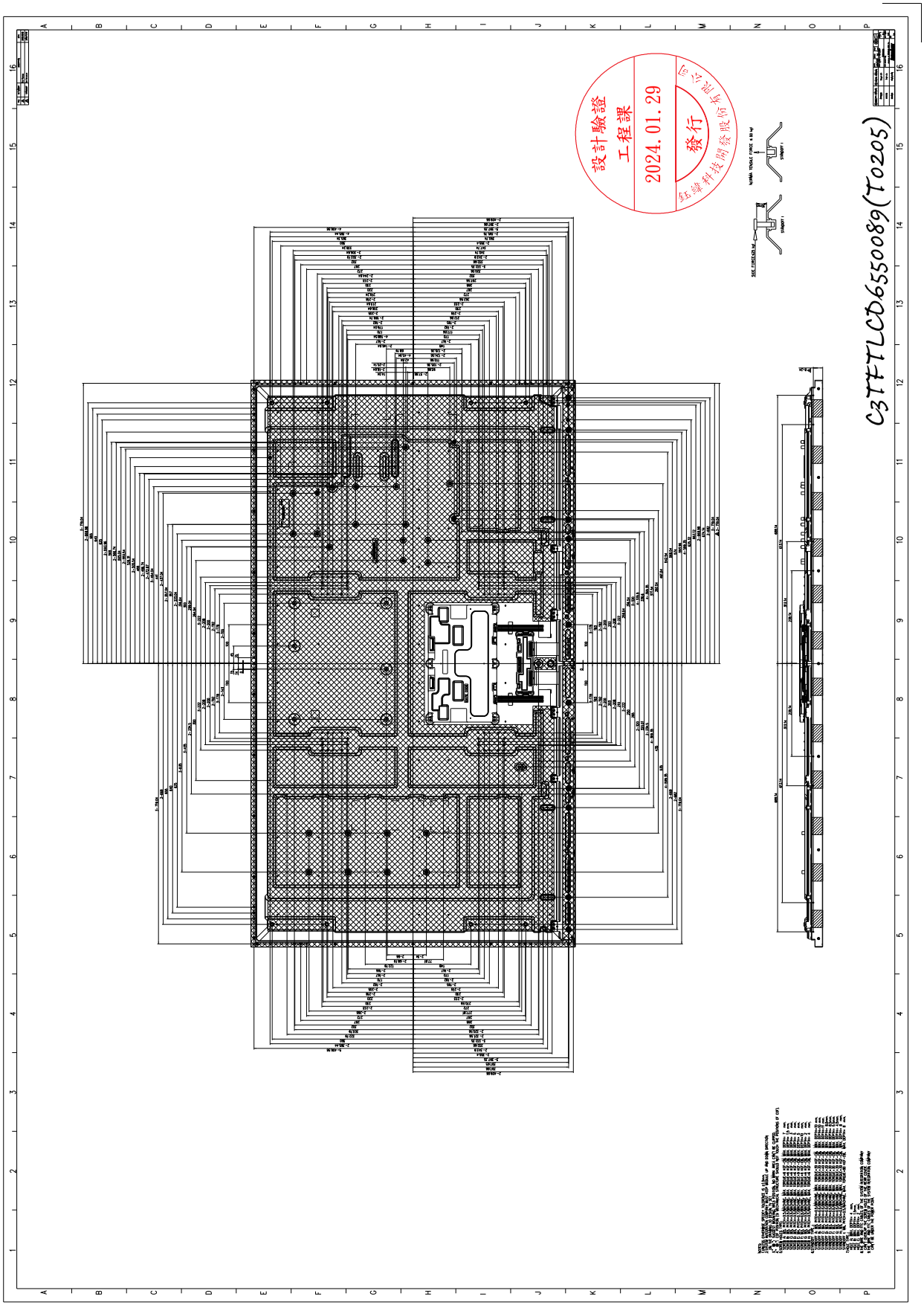

The copyright belongs to InnoLux. Any unauthorized use is prohibited

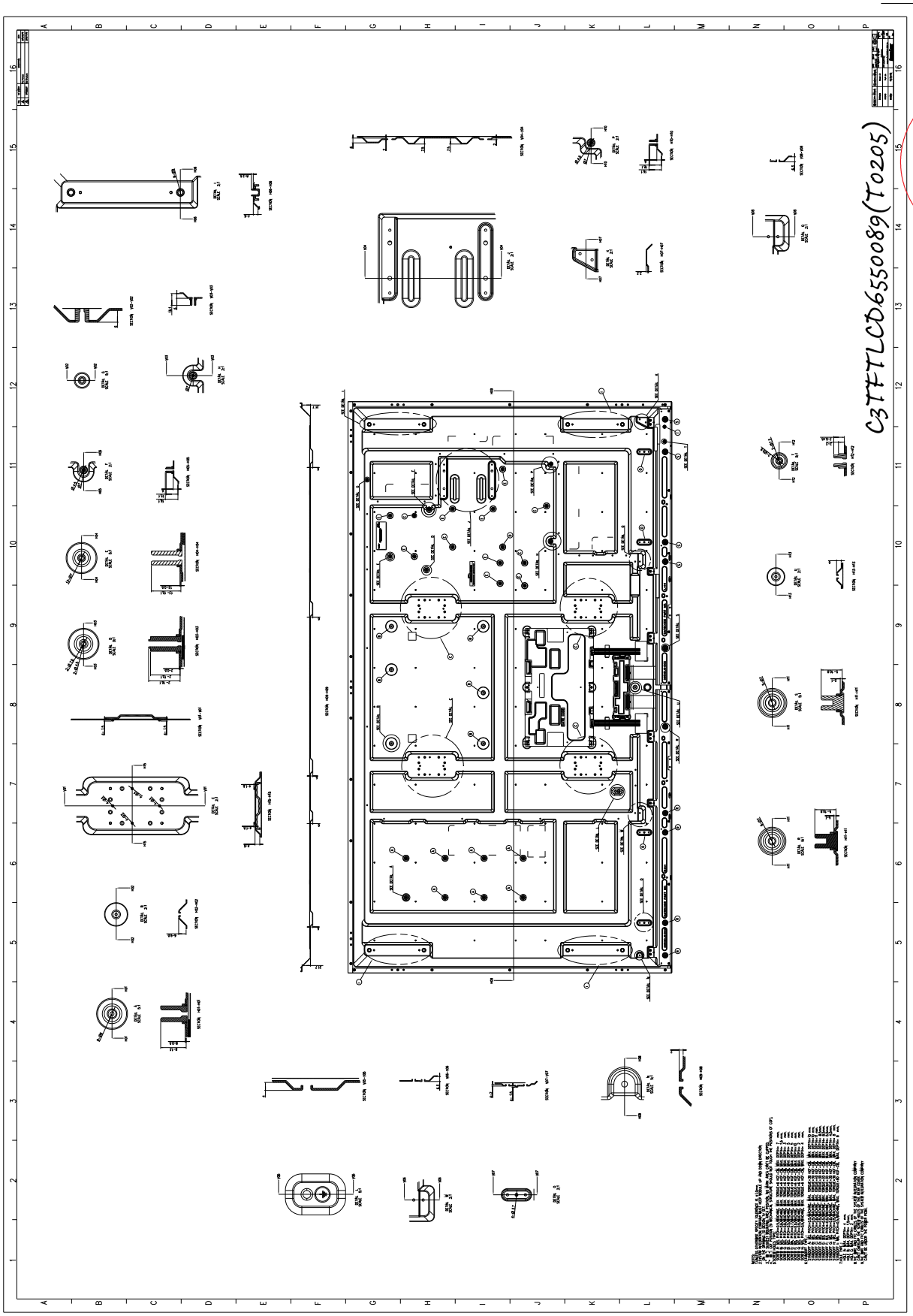

設計驗證
工程課
2024.01.29
發行
群創光電股份有限公司

The copyright belongs to InnoLux. Any unauthorized use is prohibited

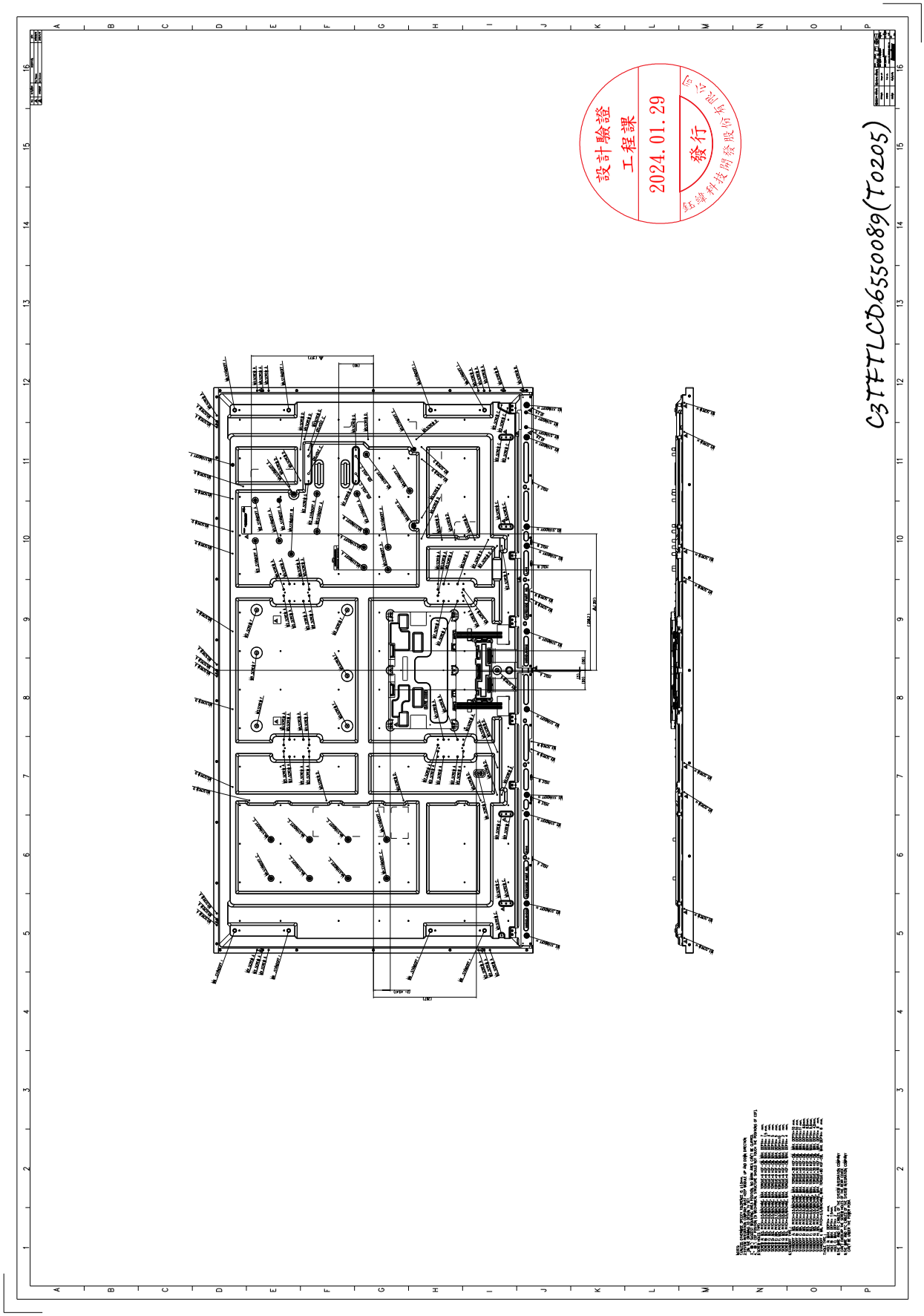

The copyright belongs to InnoLux. Any unauthorized use is prohibited

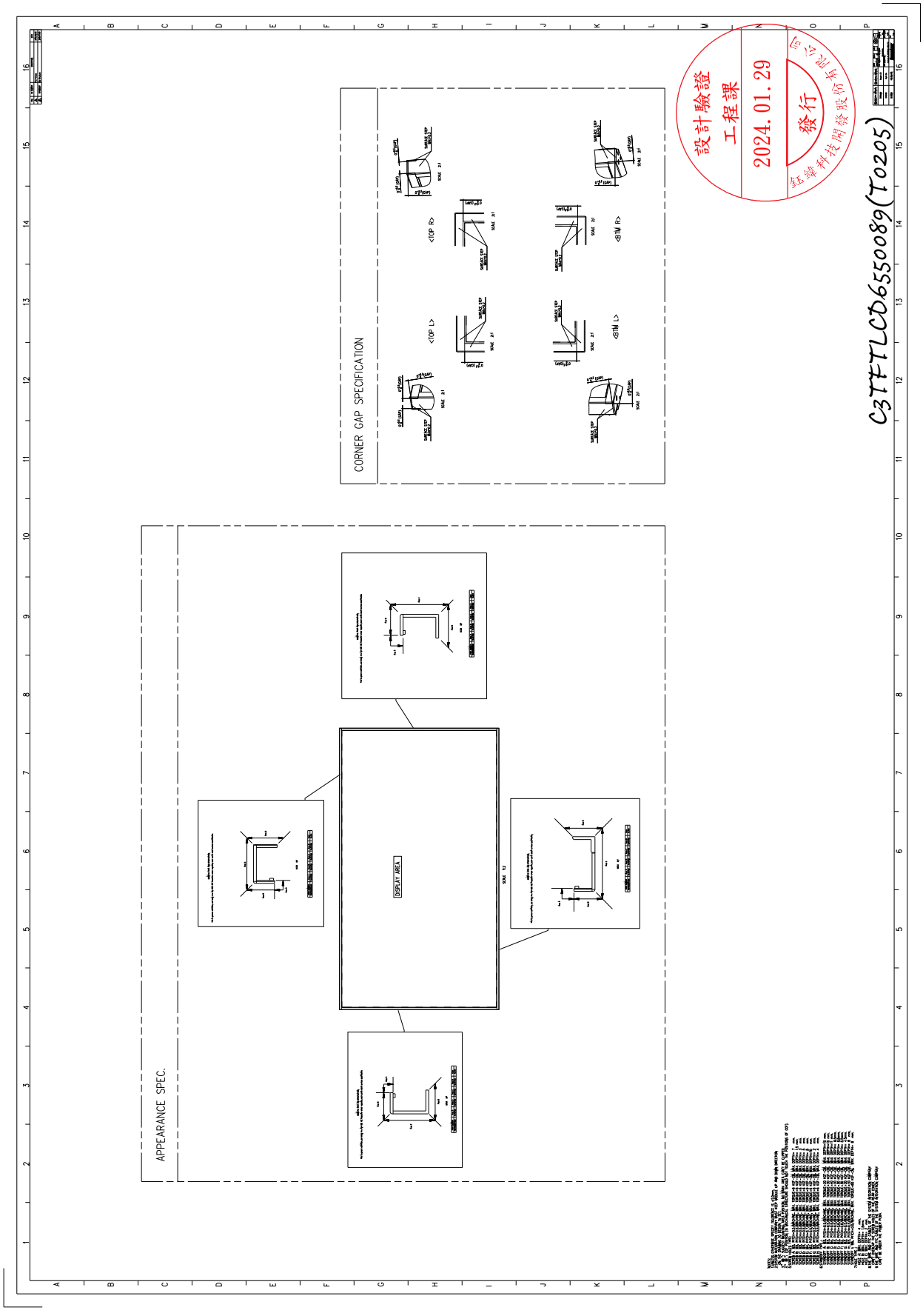

The copyright belongs to InnoLux. Any unauthorized use is prohibited

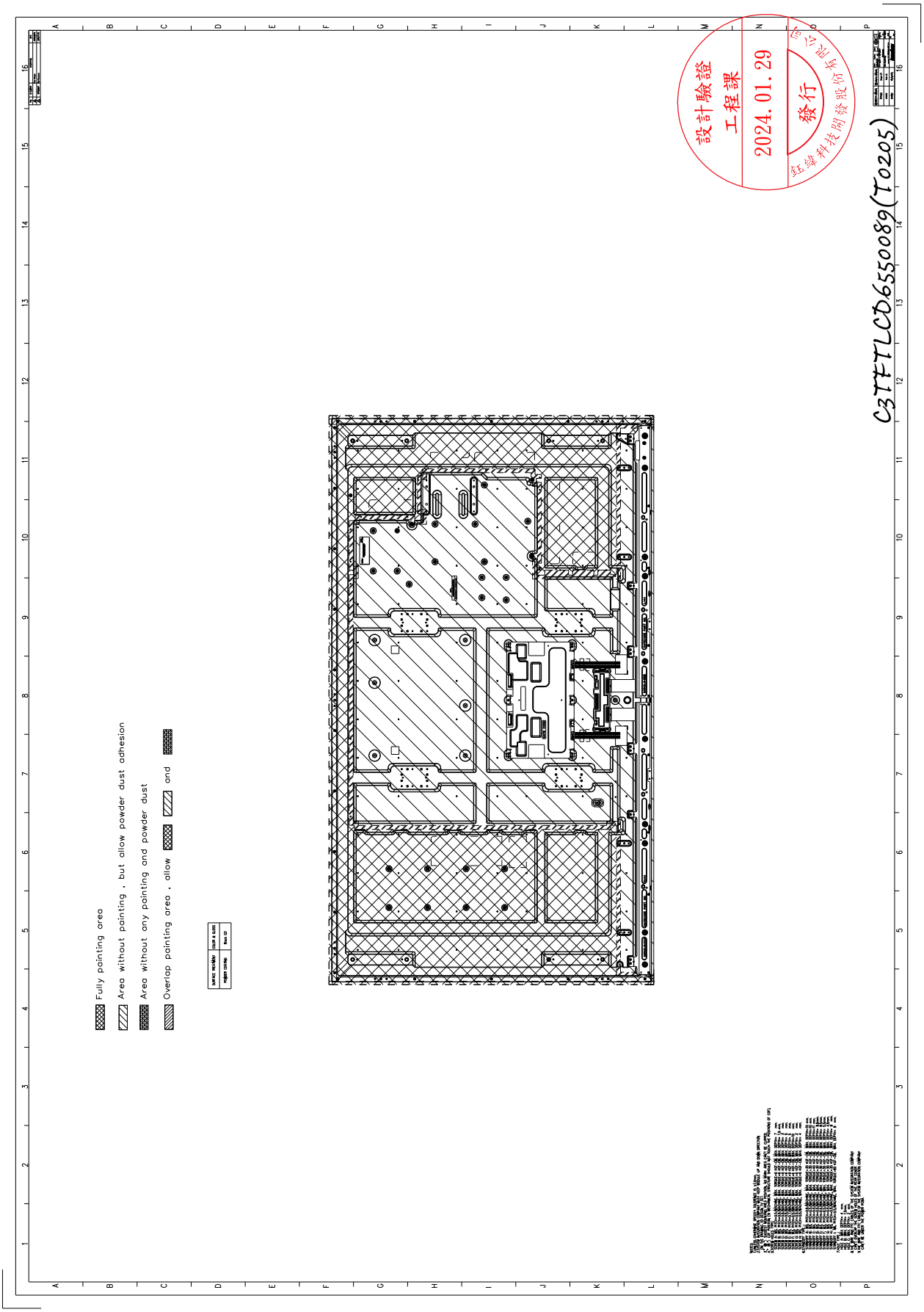

The copyright belongs to InnoLux. Any unauthorized use is prohibited