APPROVAL SHEET

WR10, WR12, WR08, WR06, WR04

±1%, ±5%

Thick Film General Purpose Chip Resistors

Size 1210, 1206, 0805, 0603, 0402

RoHS 2 Compliant with exemption 7C-I

Halogen free

PSA PASSIVE SYSTEM ALLIANCE Walsin Technology Corporation COPYRIGHT © WALSIN TECHNOLOGY CORPORATION. ALL RIGHTS RESERVED.

*Contents in this sheet are subject to change without prior notice.

Copyright © by Walsin Technology Corporation. | All rights reserved.

FEATURE

1. High reliability and stability
2. Reduced size of final equipment
3. Lower assembly costs
4. Higher component and equipment reliability
5. RoHS 2 compliant with exemption 7C-I and Halogen free products
6. Flammability against UL94-V0

APPLICATION

- Consumer electrical equipment
- EDP, Computer application
- Telecom application

DESCRIPTION

The resistors are constructed in a high grade ceramic body (aluminum oxide). Internal metal electrodes are added at each end and connected by a resistive paste that is applied to the top surface of the substrate. The composition of the paste is adjusted to give the approximate resistance required and the value is trimmed to within tolerance by laser cutting of this resistive layer.

The resistive layer is covered with a protective coat. Finally, the two external end terminations are added. For ease of soldering the outer layer of these end terminations is a Tin (lead free) alloy.

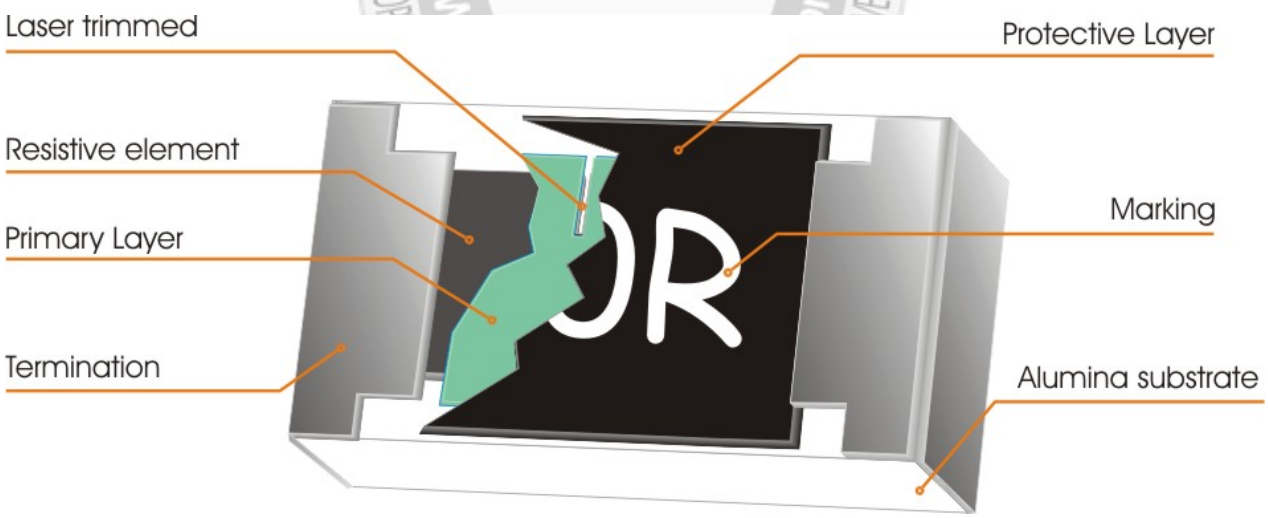

Fig 1. Construction of Chip-R

Copyright © by Walsin Technology Corporation. | All rights reserved.

QUICK REFERENCE DATA

Item	General Specification				
Series No.	WR10	WR12	WR08	WR06	WR04
Size code	1210(3225)	1206(3216)	0805(2012)	0603(1608)	0402(1005)
Resistance Range	1Ω~10MΩ (±5% tolerance), Jumper 1Ω~10MΩ (±1% tolerance),				
Resistance Tolerance	±1%, E96/E24 ±5%, E24				
TCR (ppm/°C) 10MΩ ≥R＞10Ω R≤10Ω	≤ ± 100 -200~+400				
Max. dissipation @ T_{amb}=70°C	1/3 W	1/4 W	1/8 W	1/10 W	1/16 W
Max. Operation Voltage	200V	200V	150V	75V	50V
Max. Overload Voltage	400V	400V	300V	150V	100V
Operation temperature	-55 ~ +155°C				

Note :

1. This is the maximum voltage that may be continuously supplied to the resistor element, see “IEC publication 60115-8”
2. Max. Operation Voltage : So called RCWV (Rated Continuous Working Voltage) is determined by

   $RCWV = \sqrt{Rated\,Power \times Resistance\,Value}$ or Max. RCWV listed above, whichever is lower.
3. The resistance of Jumper is defined <0.05Ω.

DIMENSIONS (unit : mm)

	WR10	WR12	WR08	WR06	WR04
L	3.10 ± 0.10	3.10 ± 0.10	2.00 ± 0.10	1.60 ± 0.10	1.00 ± 0.05
W	2.60 ± 0.10	1.60 ± 0.10	1.25 ± 0.10	0.80 ± 0.10	0.50 ± 0.05
T	0.55 ± 0.10	0.55 ± 0.10	0.50 ± 0.15	0.45 ± 0.15	0.35 ± 0.05
Tb	0.50 ± 0.20	0.45 ± 0.20	0.40 ± 0.20	0.30 ± 0.15	0.25 ± 0.10
Tt	0.50 ± 0.20	0.50 ± 0.20	0.40 ± 0.20	0.30 ± 0.10	0.20 ± 0.10

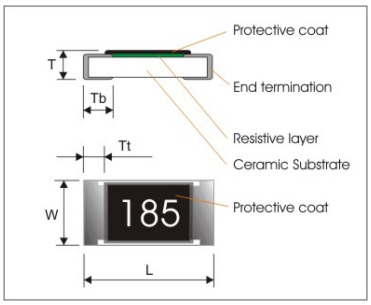

Copyright © by Walsin Technology Corporation. | All rights reserved.

MARKING

Size \ Nr. Of digit of code\tolerance	±5%	±1%
1210 (3225)	3-digits marking	4-digits marking
1206 (3216)	3-digits marking	4-digits marking
0805 (2012)	3-digits marking	4-digits marking
0603 (1608)	3-digits marking	3-digits marking
0402 (1005)	NO MARKING	

3-digits marking（±5% : 1206 & 0805 & 0603 ）

Each resistor is marked with a three digits code on the protective coating to designate the nominal resistance value.

3-digits marking（±1% : 0603）

Nominal resistance	Description
1.E-24 series	As *0603 WR06X* ±5%.
2.E-96 series	The 1st two digit codes are referring to the CODE on the table, the 3rd code is the index of resistance value : $Y=10^{-2}$，$X=10^{-1}$，$A=10^{0}$，$B=10^{1}$，$C=10^{2}$，$D=10^{3}$，$E=10^{4}$，$F=10^{5}$ EX : 17.8Ω=25X，178Ω=25A，1K78 =25B 17K8=25C， 178K=25D， 1M78=25E
3. Remark	There is no marking for the items are not under E-24 and E-96 series

CODE	R_value	CODE	R_value	CODE	R_Value	CODE	R_value	CODE	R_value	CODE	R_value	CODE	R_value	CODE	R_value
01	**100**	13	**133**	25	**178**	37	**237**	49	**316**	61	**422**	73	**562**	85	**750**
02	**102**	14	**137**	26	**182**	38	**243**	50	**324**	62	**432**	74	**576**	86	**768**
03	**105**	15	**140**	27	**187**	39	**249**	51	**332**	63	**442**	75	**590**	87	**787**
04	**107**	16	**143**	28	**191**	40	**255**	52	**340**	64	**453**	76	**604**	88	**806**
05	**110**	17	**147**	29	**196**	41	**261**	53	**348**	65	**464**	77	**619**	89	**825**
06	**113**	18	**150**	30	**200**	42	**267**	54	**357**	66	**475**	78	**634**	90	**845**
07	**115**	19	**154**	31	**205**	43	**274**	55	**365**	67	**487**	79	**649**	91	**866**
08	**118**	20	**158**	32	**210**	44	**280**	56	**374**	68	**499**	80	**665**	92	**887**
09	**121**	21	**162**	33	**215**	45	**287**	57	**383**	69	**511**	81	**681**	93	**909**
10	**124**	22	**165**	34	**221**	46	**294**	58	**392**	70	**523**	82	**698**	94	**931**
11	**127**	23	**169**	35	**226**	47	**301**	59	**402**	71	**536**	83	**715**	95	**953**
12	**130**	24	**174**	36	**232**	48	**309**	60	**412**	72	**549**	84	**732**	96	**976**

4-digits marking（±1% : 1206/0805）

Each resistor is marked with a four digits code on the protective coating to designate the nominal resistance value.

Example

RESISTANCE	10Ω	12Ω	100Ω	6800Ω	47000Ω
3-digits marking（1206 & 0805 & 0603 ±5%）	100	120	101	682	473
4-digits marking	10R0	12R0	1000	6801	4702

Copyright © by Walsin Technology Corporation. | All rights reserved.

FUNCTIONAL DESCRIPTION

Product characterization

Standard values of nominal resistance are taken from the E24 series for resistors with a tolerance of ±5%, and E96 series for resistors with a tolerance of ±1%. The values of the E24/E96 series are in accordance with "IEC publication 60063"

Derating

The power that the resistor can dissipate depends on the operating temperature; see Fig.2

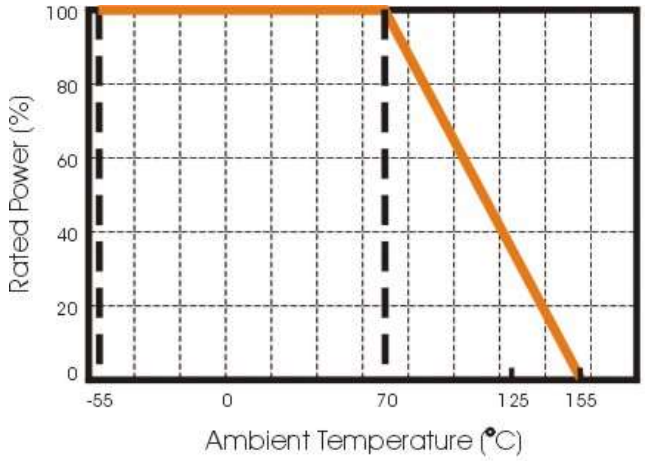

Figure 2 Maximum dissipation in percentage of rated power as a function of the ambient temperature for WR12, WR08, WR06, WR04

MOUNTING

Due to their rectangular shapes and small tolerances, Surface Mountable Resistors are suitable for handling by automatic placement systems.

Chip placement can be on ceramic substrates and printed-circuit boards (PCBs).

Electrical connection to the circuit is by individual soldering condition.

Storage and Handling Conditions:

1. Products are recommended to be used up within two years since operation date as ensured shelf life. Check solderability in case shelf life extension is needed.

2. To store products with following condition:

   Temperature :5 to 40℃

   Humidity :20 to 70% relative humidity

3. Caution:

   a.Don't store products in a corrosive environment such as sulfide, chloride gas, or acid.

   It may cause oxdization of electrode, which easily be resulted in poor soldering

   b.To store products on the shelf and avoid exposure to moisture.

   c.Don't expose products to excessive shock, vibration, direct sunlight and so on

Copyright © by Walsin Technology Corporation. | All rights reserved.

SOLDERING CONDITION follows J-STD-020D

The robust construction of chip resistors allows them to be completely immersed in a solder bath of 260°C for 10 seconds. Therefore, it is possible to mount Surface Mount Resistors on one side of a PCB and other discrete components on the reverse (mixed PCBs).

Surface Mount Resistors are tested for solderability at 235°C during 2 seconds. The test condition for no leaching is 260°C for 30 seconds. Typical examples of soldering processes that provide reliable joints without any damage are given in Fig 3.

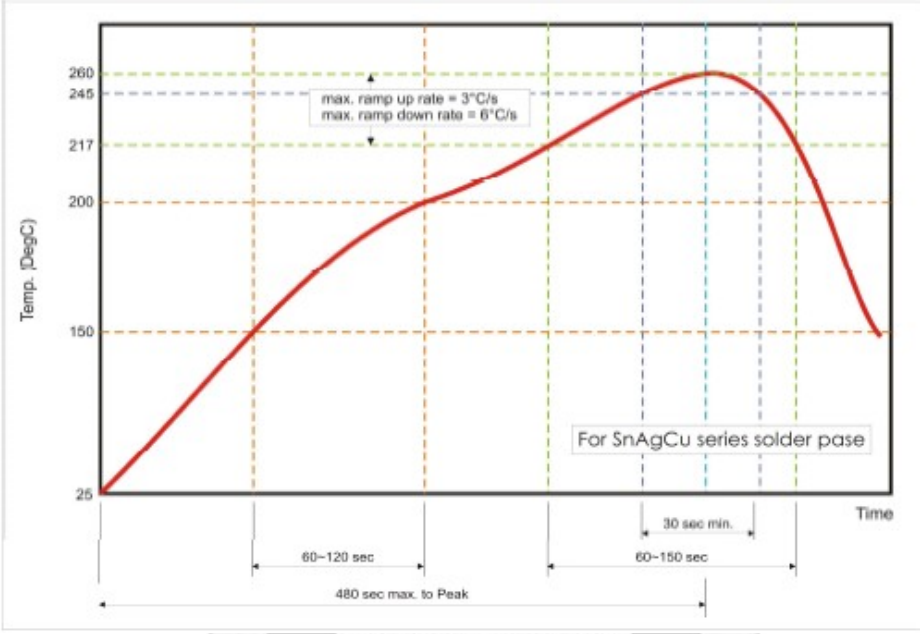

Fig 3. Infrared soldering profile for Chip Resistors

CATALOGUE NUMBERS

The resistors have a catalogue number starting with

WR12	X	472_	J	T	L
Size code WR10 : 1210 WR12 : 1206 WR08 : 0805 WR06 : 0603 WR04 : 0402	**Type code** **X :** Jumper ±5%, 1Ω ~ 10MΩ ±1%, 10Ω ~ 1MΩ **W** : ±1%, < 10Ω; >1MΩ	**Resistance code** ±5%, E24: 2 significant digits followed by no. of zeros and a blank 4.7Ω =4R7_ 10Ω =100_ 220Ω =221_ Jumper =000_ ("_" means a blank) ±1%, E24+E96: 3 significant digits followed by no. of zeros 102Ω =1020 37.4KΩ =3742 82Ω = 82R0	**Tolerance** F : ±1% J : ±5% P : Jumper	**Packaging code** T : 7" Reeled taping E : 7" Reeled taping up side down Q : 10" Reeled taping G : 13" Reeled taping H : 13" reel 50Kpcs only for 0402 B : Bulk D : 7" reel 20Kpcs only for 0402 A : 7" reel 15Kpcs only for 0402	**Termination code** **L=** Sn base (lead free)

WR10, WR12, WR08, WR06:

1. Reeled tape packaging: 8mm width paper taping 5000pcs per 7" reel, 10kpcs per 10" reel, 20kpcs per 13" reel.
2. Bulk packaging : 5000pcs per poly-bag

WR04:

1. Reeled tape packaging: 8mm width paper taping 10,000pcs per 7" reel, 20,000pcs per 10" reel. 70,000pcs per 13" reel.
2. Bulk packaging : 10,000pcs per poly-bag

Copyright © by Walsin Technology Corporation. | All rights reserved.

TEST AND REQUIREMENTS

Essentially all tests are carried out according to the schedule of IEC publication 115-8, category **LCT/UCT**/56(rated temperature range : **L**ower **C**ategory **T**emperature, **U**pper **C**ategory **T**emperature; damp heat, long term, 56 days). The testing also meets the requirements specified by EIA, EIAJ and JIS.

The tests are carried out in accordance with IEC publication 68, "Recommended basic climatic and mechanical robustness testing procedure for electronic components" and under standard atmospheric conditions according to IEC 60068-1, subclause 5.3. Unless otherwise specified, the following value supplied :

Temperature: 15°C to 35°C.

Relative humidity: 45% to 75%.

Air pressure: 86kPa to 106 kPa (860 mbar to 1060 mbar).

All soldering tests are performed with midly activated flux.

TEST	PROCEDURE / TEST METHOD	REQUIREMENT	
		Resistor	0Ω
Electrical Characteristics JISC5201-1: 1998 Clause 4.8	- DC resistance values measurement - Temperature Coefficient of Resistance (T.C.R) Natural resistance change per change in degree centigrade. $\frac{R_2 - R_1}{R_1(t_2 - t_1)} \times 10^6$ (ppm/°C) t_1 : 20°C+5°C-1°C; t_2 : -55°C or +155°C R_1 : Resistance at reference temperature (20°C+5°C/-1°C) R_2 : Resistance at test temperature (-55°C or +155°C)	Within the specified tolerance Refer to "QUICK REFERENCE DATA"	<50mΩ
Resistance to soldering heat(R.S.H) JISC5201-1:1998 Clause 4.18	Un-mounted chips completely immersed for 10±1second in a SAC solder bath at 260℃±5°C	±5%:ΔR/Rmax.±(1%+0.05Ω) ±1%:ΔR/Rmax.±(0.5%+0.05Ω) no visible damage	<50mΩ
Solderability JISC5201-1:1998 Clause 4.17	Un-mounted chips completely immersed for 2±0.5 second in a SAC solder bath at 235℃±5℃	95% coverage min., good tinning and no visible damage	
Temperature cycling JISC5201-1:1998 Clause 4.19	30 minutes at -55°C±3°C, 2~3 minutes at 20°C+5°C-1°C, 30 minutes at +155°C±3°C, 2~3 minutes at 20°C+5°C-1°C, total 5 continuous cycles	±5%: ΔR/R max. ±(1%+0.05Ω) ±1%:ΔR/Rmax.±(0.5%+0.05Ω) No visible damage	<50mΩ
High Temperature Exposure MIL-STD-202 method 108	1000+48/-0 hours; without load in a temperature chamber controlled 155±3°C	±5%:ΔR/Rmax.±(2%+0.1Ω) ±1%:ΔR/Rmax.±(1%+0.1Ω) No visible damage	<50mΩ
Bending strength JISC5201-1:1998 Clause 4.33	Resistors mounted on a 90mm glass epoxy resin PCB(FR4), bending once 3mm for 10sec, 5mm for WR04	±5%:ΔR/Rmax.±(1%+0.05Ω) ±1%:ΔR/Rmax.±(1%+0.05Ω) No visual damaged	<50mΩ
Adhesion JISC5201-1:1998 Clause 4.32	Pressurizing force: 5N, Test time: 10±1sec.	No remarkable damage or removal of the terminations	

Copyright © by Walsin Technology Corporation. | All rights reserved.

TEST	PROCEDURE / TEST METHOD	REQUIREMENT	
		Resistor	0Ω
Short Time Overload (STOL) JISC5201-1:1998 Clause 4.13	2.5 times RCWV or max. overload voltage, for 5seconds	±5%: ΔR/R max. ±(2%+0.05Ω) ±1%: ΔR/R max. ±(1%+0.05Ω) No visible damage	<50mΩ
Load life in Humidity JISC5201-1:1998 Clause 4.24	1000 +48/-0 hours, loaded with RCWV or Vmax in humidity chamber controller at 40°C±2°C and 90~95% relative humidity, 1.5hours on and 0.5 hours off	±5%: ΔR/R max. ±(2%+0.1Ω) ±1%: ΔR/R max. ±(1%+0.1Ω) No visible damage	<50mΩ
Load life (endurance) JISC5201-1:1998 Clause 4.25	1000 +48/-0 hours, loaded with RCWV or Vmax in chamber controller 70±2°C, 1.5 hours on and 0.5 hours off	±5%: ΔR/R max. ±(3%+0.1Ω) ±1%: ΔR/R max. ±(1%+0.1Ω) No visible damage	<50mΩ
Insulation Resistance JISC5201-1:1998 Clause 4.6	Apply the maximum overload voltage (DC) for 1minute	R≧10GΩ	
Dielectric Withstand Voltage JISC5201-1:1998 Clause 4.7	Apply the maximum overload voltage (AC) for 1 minute	No breakdown or flashover	

JUMPER SPEC (0 Ω)

Item	WR10	WR12	WR08	WR06	WR04
Power Rating At 70°C	1/3W	1/4W	1/8W	1/10W	1/16W
Resistance	MAX.50mΩ				
Rated Current	2.5A	2A	1.6A	1A	1A
Peak Current	6A	5A	3.2A	3A	2A
Operating Temperature	-55 ~ +155°C				

Copyright © by Walsin Technology Corporation. | All rights reserved.

PACKAGING

Paper Tape specifications (unit :mm)

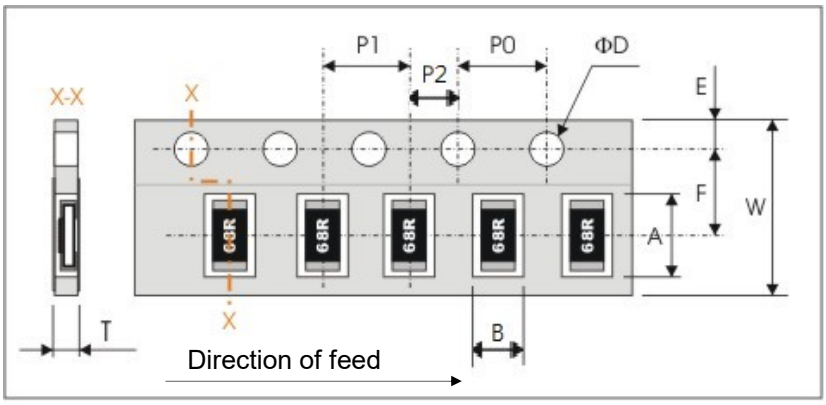

Series No.	A	B	W	F	E
WR10	3.60±0.20	3.00±0.20	8.00±0.30	3.50±0.20	1.75±0.10
WR12	3.60±0.20	2.00±0.20			
WR08	2.40±0.20	1.65±0.20			
WR06	1.90±0.20	1.10±0.20			
WR04	1.20±0.10	0.70±0.10			

Series No.	P1	P0	P2	ΦD	T
WR10/12/08	4.00±0.10	4.00±0.10	P2=1/2P0	$\Phi 1.50^{+0.1}_{-0.0}$	0.80±0.1
WR06					0.70±0.05
WR04	2.00±0.10				0.50±0.05

Reel dimensions

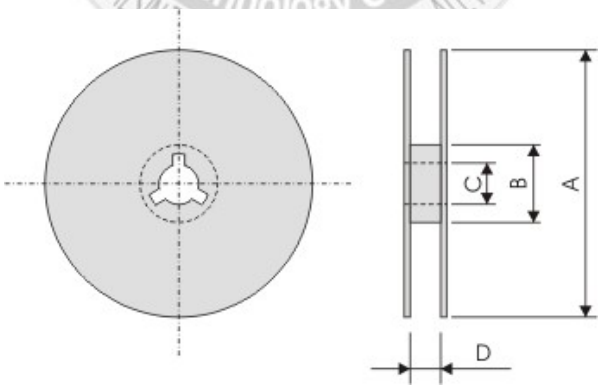

Symbol	A	B	C	D
7” reel	Φ178.0±2.0	Φ60.0±1.0	13.0±0.2	9.0±0.5
10” reel	Φ254.0±2.0	Φ100.0±1.0	13.0±0.2	9.0±0.5
13” reel	Φ330.0±2.0	Φ100.0±1.0	13.0±0.2	9.0±0.5

Copyright © by Walsin Technology Corporation. | All rights reserved.