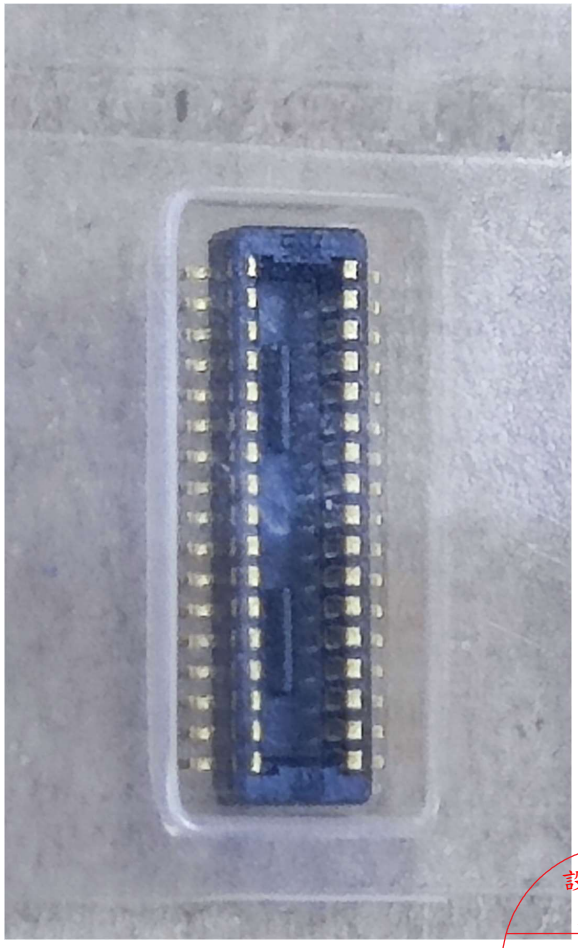



設計驗證
工程課
2024.01.23
發行
宜鼎科技開發股份有限公司

HIROSE

承　認　書

客戶名稱：鈺緯科技開發股份有限公司

品　　名：DF40C-30DS-0.4V(51)

規　　格：CONN.M (30P,DF40C-30DS-0.4V(51),SMD,HRS)

適用機種：

客戶料號：3FM03016910 (F0297)

零件淨重：0.042 g

設計驗證
工程課
2024.01.23
發行
鈺緯科技開發股份有限公司

承　認　簽　章					
					Eva

株式會社　村田製作所總代理

株式會社　廣瀨電機台灣代理

佳 普 股 份 有 限 公 司

台北市信義路四段 184 號 4 樓

TEL:(02)27089155(代表四線)

FAX:(02)27068923　27021777

Dec.1.2023 Copyright 2023 HIROSE ELECTRIC CO., LTD. All Rights Reserved.
In case of consideration for using Automotive equipment / device which demand high reliability, kindly contact our sales window correspondents.

APPLICABLE STANDARD				
RATING	OPERATING TEMPERATURE RANGE	-35°C TO +85°C(NOTES 1)	STORAGE TEMPERATURE RANGE	-10°C TO +60°C
	VOLTAGE	30V AC	APPLICABLE CONNECTOR	DF40C-*DP-0.4V(**)
	CURRENT ②△	【100 contacts or less】 : 0.3A 【120 contacts】 : 0.25A		

SPECIFICATIONS

ITEM	TEST METHOD	REQUIREMENTS	QT	AT
CONSTRUCTION				
GENERAL EXAMINATION	VISUALLY AND BY MEASURING INSTRUMENT.	ACCORDING TO DRAWING.	X	X
MARKING	CONFIRMED VISUALLY.		X	X
ELECTRIC CHARACTERISTICS				
CONTACT RESISTANCE	20mV AC OR LESS 1khz,1m A .	90mΩ MAX.	X	—
INSULATION RESISTANCE	100V DC.	50MΩ MIN.	X	—
VOLTAGE PROOF	100V AC FOR 1 min.	NO FLASHOVER OR BREAKDOWN.	X	—
MECHANICAL CHARACTERISTICS				
MECHANICAL OPERATION	30TIMES INSERTIONS AND EXTRACTIONS.	① CONTACT RESISTANCE: 90mΩ MAX. ② NO DAMAGE, CRACK OR LOOSENESS OF PARTS.	X	—
VIBRATION	FREQUENCY 10 TO 55 TO 10 Hz,APPROX 5min, SINGLE AMPLITUDE 0.75 mm,10CYCLES, FOR 3 DIRECTIONS.	① NO ELECTRICAL DISCONTINUITY OF 1 μs. ② NO DAMAGE, CRACK OR LOOSENESS OF PARTS.	X	—
SHOCK	490 m/s^2 DURATION OF PULSE 11 ms AT 3 TIMES FOR 3 DIRECTIONS.	① NO ELECTRICAL DISCONTINUITY OF 1 μs. ② NO DAMAGE, CRACK OR LOOSENESS OF PARTS.	X	—
ENVIRONMENTAL CHARACTERISTICS				
RAPID CHANGE OF TEMPERATURE	TEMPERATURE -55→5 TO 35→+85→ 5 TO 35 °C TIME 30→5 MAX → 30→ 5 MAX min UNDER 5 CYCLES.	① CONTACT RESISTANCE: 90mΩ MAX. ② INSULATION RESISTANCE: 50MΩ MIN. ③ NO DAMAGE, CRACK OR LOOSENESS OF PARTS.	X	—
DAMP HEAT (STEADY STATE)	EXPOSED AT 40 ± 2 °C, 90 TO 95 %, 96 h.	① CONTACT RESISTANCE: 90mΩ MAX. ② INSULATION RESISTANCE: 25MΩ MIN. ③ NO DAMAGE, CRACK OR LOOSENESS OF PARTS.	X	—
SULPHUR DIIOXIDE	EXPOSED IN 25 PPM FOR 96h,25℃,75%.	① CONTACT RESISTANCE: 180mΩ MAX. ② NO DAMAGE, CRACK OR LOOSENESS OF PARTS.	X	—
HEAT RESISTANCE OF SOLDERING	**RECOMMENDED TEMPERATURE PROFILE** **SOLDERING AREA** MAX 250℃, 220℃ FOR 60 SECONDS MAX. **PREHEATING AREA** 150 TO 180℃ 90 TO 120SECONDS. MAXIMUM TWICE ACTION IS ALLOWED UNDER THE SAME CONDITION. **RECOMMENDED MANUAL SOLDERING CONDITION** SOLDERING IRON TEMPERATURE 350℃. SOLDERING TIME: WIHTIN 3 SECONDS.	NO DEFORMATION OF CASE OF EXCESSIVE LOOSENESS OF THE TERMINASL.	X	—
SOLDERABILITY	SOLDERING TEMPERATURE: 245±5℃ DURATION OF IMMERSION: SOLDERING FOR 3 ±0.5 SECONDS.	A NEW UNIFORM COATING OF SOLDER SHALL COVER MINIMUM OF 95% OF THE SURFACE BEING IMMERSED.	X	—

	COUNT	DESCRIPTION OF REVISIONS	DESIGNED	CHECKED	DATE
②△	1	DIS-H-00006247	RH. KAGAMI	WR. FUKUCHI	20200814

REMARKS
NOTE1: INCLUDE THE TEMPERATURE RISING BY CURRENT

Unless otherwise specified, refer to JIS C 5402.

APPROVED	KH. IKEDA	20110803
CHECKED	TS. MIYAZAKI	20110803
DESIGNED	YH. MICHIDA	20110803
DRAWN	YH. MICHIDA	20110803

Note QT:Qualification Test AT:Assurance Test X:Applicable Test

DRAWING NO. ELC-311352-51-51

HRS	SPECIFICATION SHEET	PART NO.	DF40C-*DS-0.4V(51)	
	HIROSE ELECTRIC CO., LTD.	CODE NO.	CL684 ②△	1/1

FORM HD0011-2-1

Feb.1.2023 Copyright 2023 HIROSE ELECTRIC CO., LTD. All Rights Reserved.
In case of consideration for using Automotive equipment / device which demand high reliability, kindly contact our sales window correspondents.

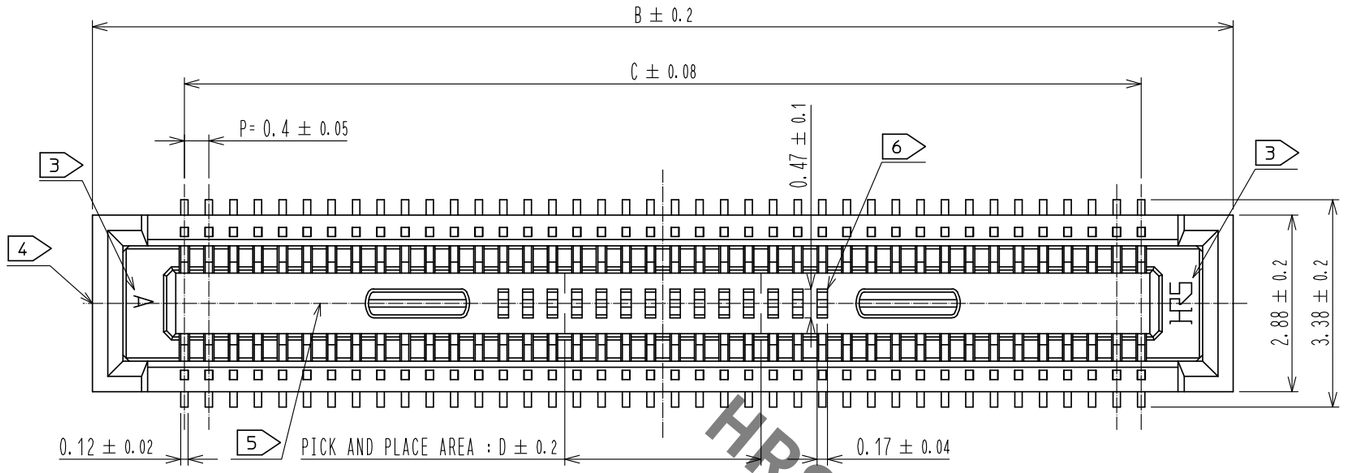

RECOMMENDED PATTERN

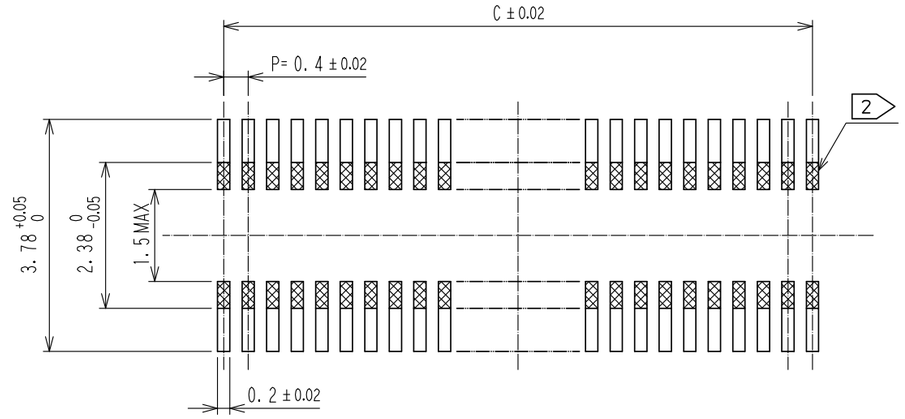

RECOMMENDED METAL MASK THICKNESS : 120 μm
RECOMMENDED METAL MASK OPENING RATIO : 80% FOR LEAD PAD

A-A(20:1)

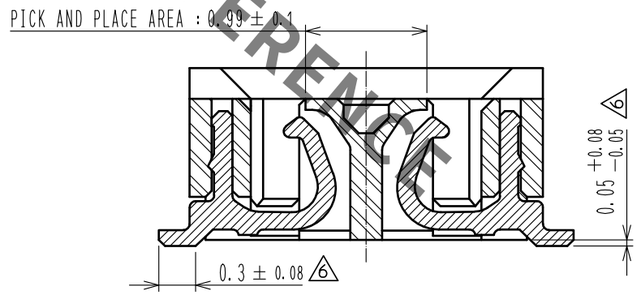

ENGAGEMENT FIGURE (20:1)

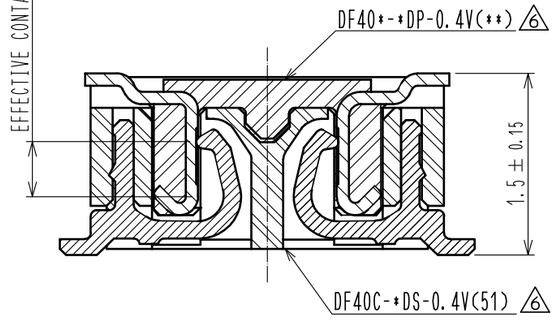

NOTES) 1. ALL LEADS CO-PLANARITY SHALL BE 0.1 MAX.
2 IS NO PATTERN AREA OTHER THAN THE SAME CIRCUIT.
6 3 HRS MARK AND CAV NO. ARE LOCATED IN APPROXIMAL AREA.
6 4 GATE OF 10 TO 50 POSITIONS IS LOCATED IN APPROXIMAL AREA.
A PART OF THE WALL COULD BE NOTHED FOR SETTING GATE.
6 5 GATE OF 60 TO 120 POSITIONS IS LOCATED IN APPROXIMAL AREA.
6 6 60 TO 120 POSITIONS HAVE CONCAVE PORTION.

製品名	製品コード	B	C	D
DF40C-10DS-0.4V(51)	CL684-4036-2-51	4.6	1.6	1.0
DF40C-20DS-0.4V(51)	CL684-4005-9-51	6.6	3.6	1.0
DF40C-24DS-0.4V(51)	CL684-4006-1-51	7.4	4.4	1.0
DF40C-30DS-0.4V(51)	CL684-4007-4-51	8.6	5.6	1.5
DF40C-34DS-0.4V(51)	CL684-4023-0-51	9.4	6.4	2.3
DF40C-40DS-0.4V(51)	CL684-4008-7-51	10.6	7.6	3.2
DF40C-50DS-0.4V(51)	CL684-4009-0-51	12.6	9.6	3.2
DF40C-60DS-0.4V(51)	CL684-4004-6-51	14.6	11.6	3.2
DF40C-70DS-0.4V(51)	CL684-4016-5-51	16.6	13.6	3.2
DF40C-80DS-0.4V(51)	CL684-4002-0-51	18.6	15.6	3.2
DF40C-90DS-0.4V(51)	CL684-4124-8-51	20.6	17.6	3.2
DF40C-100DS-0.4V(51)	CL684-4033-4-51	22.6	19.6	3.2
6 DF40C-120DS-0.4V(51)	CL684-4108-1-51	26.6	23.6	3.2

NO.	MATERIAL	FINISH , REMARKS	NO.	MATERIAL	FINISH , REMARKS
2	PHOSPHOR BRONZE	CONTACT AREA:GOLD 0.05μm MIN SMT LEAD:GOLD 0.05μm MIN UNDERPLATING:NICKEL 1μm MIN	6	PS	CLEAR, REINFORCEMENT COLLAR
			5	PS	BLACK, PLASTIC REEL
			4	POLYESTER	CLEAR, COVER TAPE
1	LCP	BLACK, UL94V-0	3	PS	CLEAR, EMBOSSED CARRIER TAPE

UNITS	SCALE	COUNT	DESCRIPTION OF REVISIONS	DESIGNED	CHECKED	DATE
mm	10 : 1	6 11	DIS-H-00004431	SJ. WADA	TS. MIYAZAKI	20181119

HRS HIROSE ELECTRIC CO., LTD.

APPROVED	MO. NAKAMURA	20051209
CHECED	KH. IKEDA	20051209
DESIGNED	MY. GOTO	20051209
DRAWN	MY. GOTO	20051209

DRAWING NO. EDC3-311352-00
PART NO. DF40C-*DS-0.4V(51)
CODE NO. CL684
6 1/2

設計驗證
工程課
2024.01.23
發行
鈺鎌科技開發股份有限公司

3FM03016910(F0297)

HRS DRAWING FOR REFERENCE

FORM HC0011-5-7

Feb.1.2023 Copyright 2023 HIROSE ELECTRIC CO., LTD. All Rights Reserved.
In case of consideration for using Automotive equipment / device which demand high reliability, kindly contact our sales window correspondents.

HRS DRAWING FOR REFERENCE

EMBOSSED CARRIER TAPE PACKAGING (5:1)

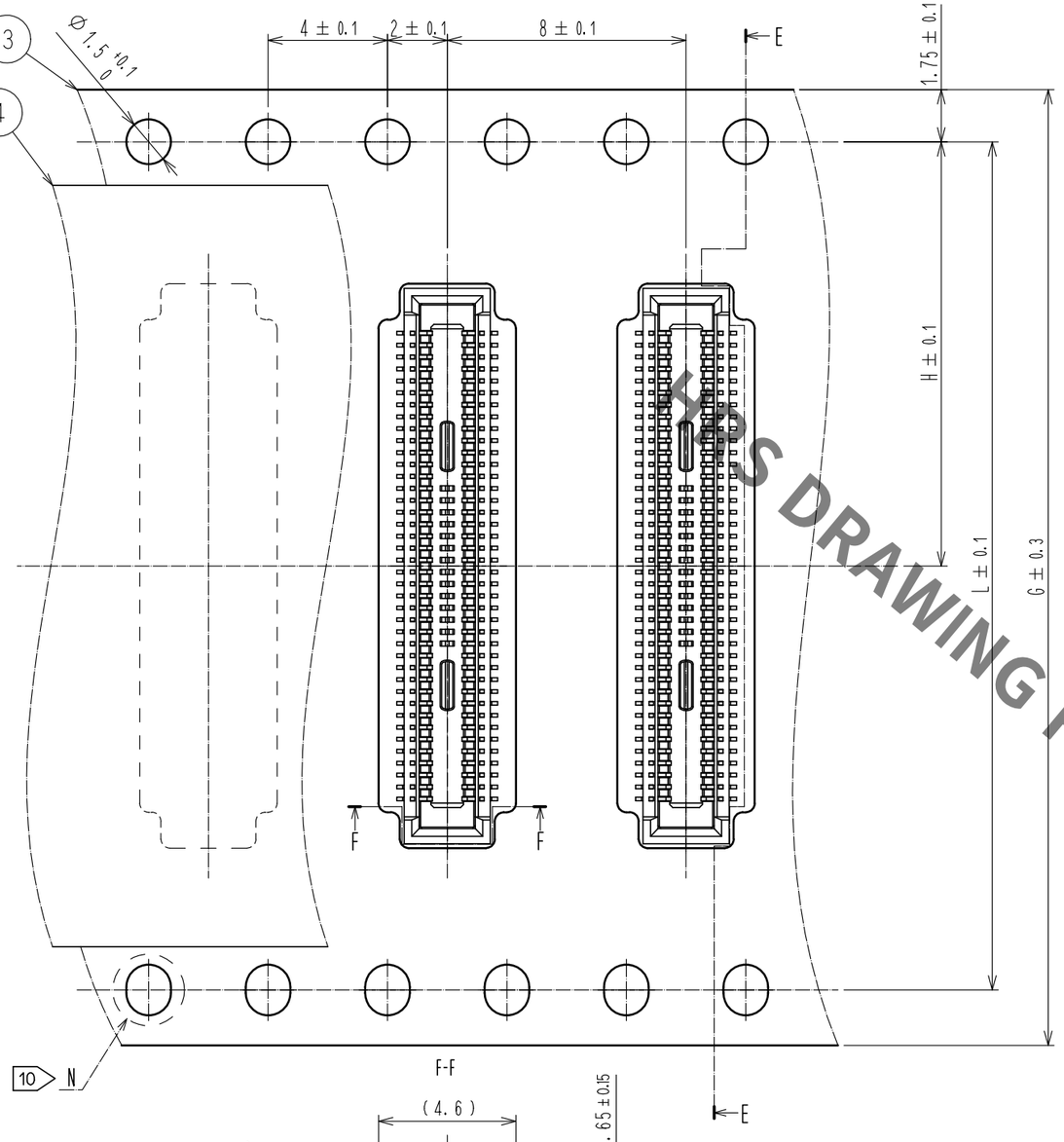

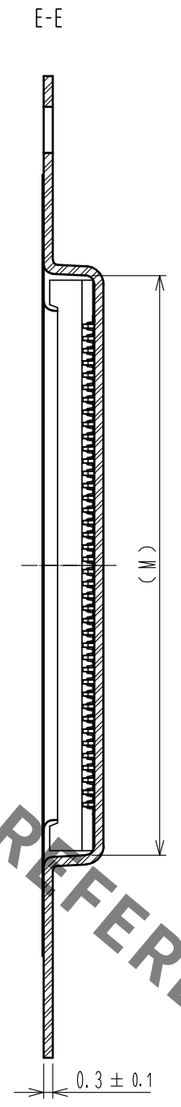

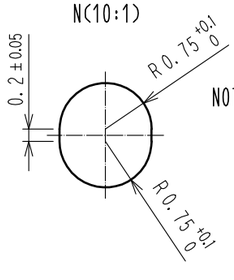

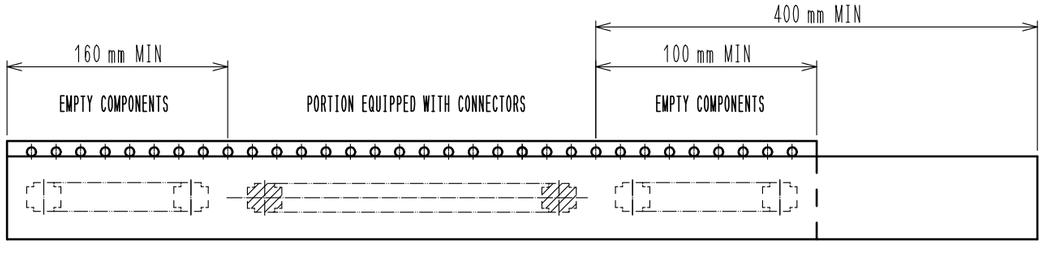

STYLE AND DIMENSION OF REEL(FREE SIZE)

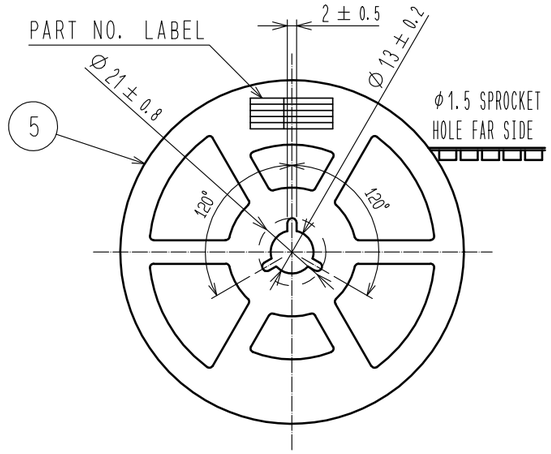

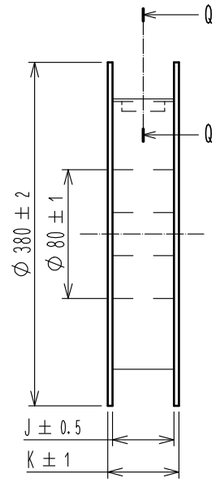

DETAIL OF PART NO. LABEL

製造年月日	** ** **	DATE OF MANUFACTURED
製品コード	CL684-****-*-51	CODE NO.
製品名	DF40C-*DS-0.4V(51)	PART NO.
数量	5000	QUANTITY
納入者	ヒロセ電機(株)	SUPPLIER

Q-Q (FREE)

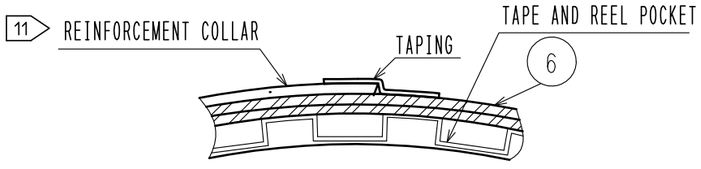

PART NO.	G	H	J	K	L	M
DF40C-10DS-0.4V(51)	16	7.5	17.5	21.5	—	4.9
DF40C-20DS-0.4V(51)	16	7.5	17.5	21.5	—	6.9
DF40C-24DS-0.4V(51)	16	7.5	17.5	21.5	—	7.7
DF40C-30DS-0.4V(51)	24	11.5	25.5	29.5	—	8.9
DF40C-34DS-0.4V(51)	24	11.5	25.5	29.5	—	8.9
DF40C-40DS-0.4V(51)	24	11.5	25.5	29.5	—	10.9
DF40C-50DS-0.4V(51)	24	11.5	25.5	29.5	—	12.9
DF40C-60DS-0.4V(51)	24	11.5	25.5	29.5	—	14.9
DF40C-70DS-0.4V(51)	32	14.2	33.5	37.5	28.4	16.9
DF40C-80DS-0.4V(51)	32	14.2	33.5	37.5	28.4	18.9
DF40C-90DS-0.4V(51)	44	20.2	45.5	49.5	40.4	20.9
DF40C-100DS-0.4V(51)	44	20.2	45.5	49.5	40.4	22.9
6 DF40C-120DS-0.4V(51)	44	20.2	45.5	49.5	40.4	26.9

NOTES) 7. PER REEL 5000 CONNECTORS.
8. THE DIMENSIONS IN PARENTHESES ARE FOR REFERENCE.
6 9 REFER TO JIS C 0806(IEC 60286-3)(PACKING OF COMPONENTS FOR AUTOMATIC HANDLING)
10 10 TO 60 POSITIONS EMBOSSED CARRIER TAPE HAS THE SPROCKET HOLE ON ONE SIDES.
11 AFTER PACKAGING, ROLL 2 METERS OF THE REINFORCEMENT COLLAR TO OUTER CIRCUMFERENCE OF TAPE AND REEL POCKET, AND TAPE DOWN AT THE END THE COLLAR.

設計驗證 工程課 2024.01.23 發行 弘輝科技開發股份有限公司

3FM03016910(F0297)

DRAWING NO.	EDC3-311352-00
PART NO.	DF40C-*DS-0.4V(51)
CODE NO.	CL684
6	2/2