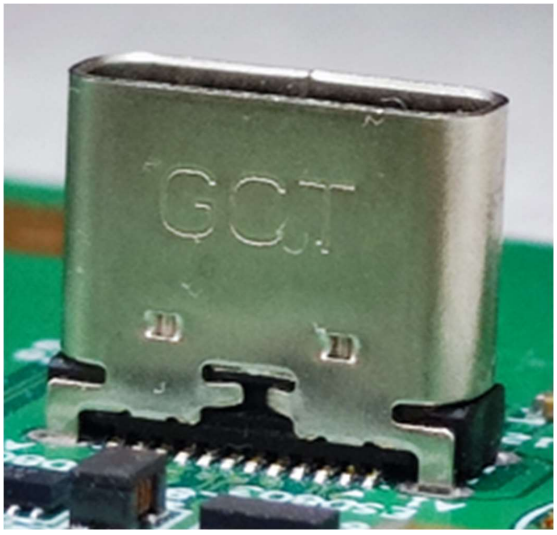

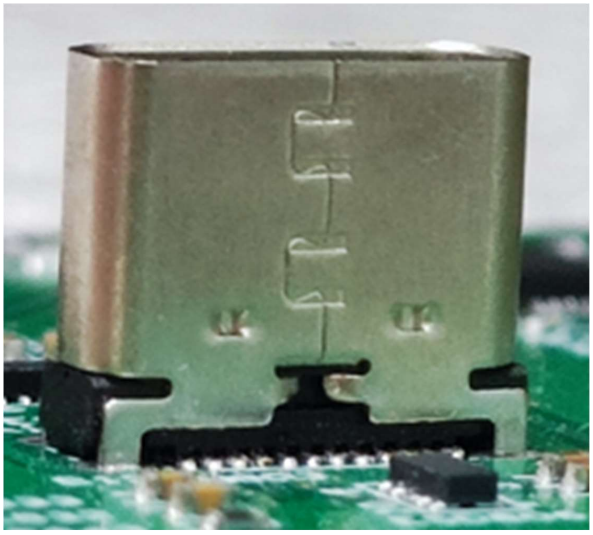

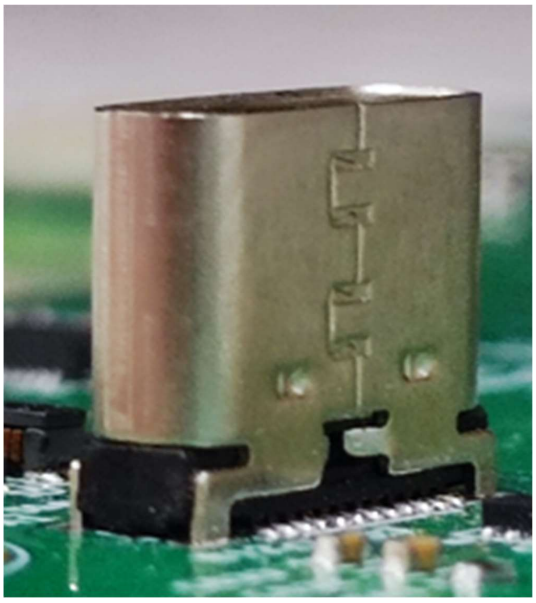



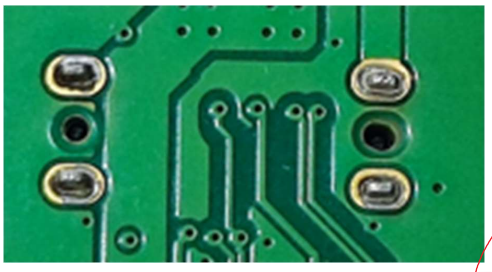

設計驗證
工程課
2024.01.11
發行
鈺邁科技開發股份有限公司

FUTURE ELECTRONICS INC. (DISTRIBUTION) PTE LTD. TAIWAN BRANCH
台灣創先電子有限公司

DATE: 2023/12/13

承 認 書
APPROVAL SHEET

客戶名稱 : DIVA Laboratories. Ltd.
鈺緯科技開發股份有限公司

品名 : Global Connector Technology Ltd /
USB4160-03-0230-C

客戶料號 : 3FU02401710 (F0294)

廠商 : FUTURE ELECTRONICS INC. (DISTRIBUTION)

業務工程師 : Ally Chou

承認日期	廠商簽章	客戶承認章
	台北市信義區東興路69號10樓 台灣創先 電子有限公司 TEL:(02)2171-1999	設計驗證 工程課 2024.01.11 發行 鈺緯科技開發股份有限公司

APPROVA

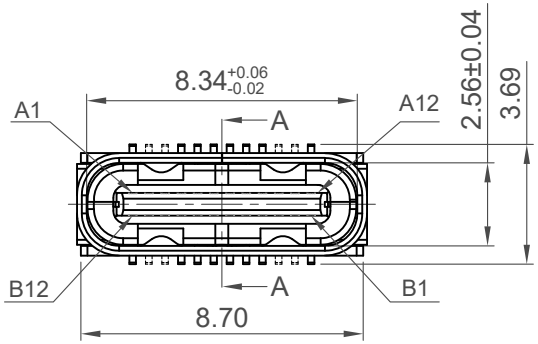

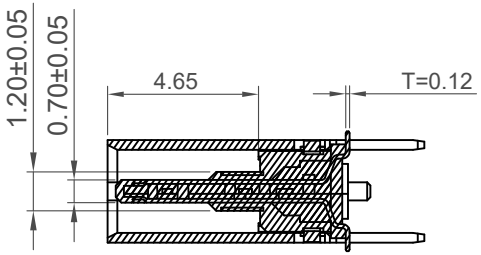

Section: A-A

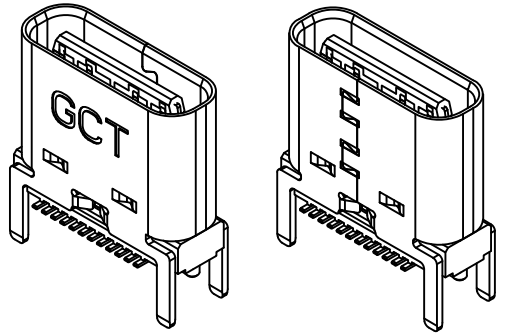

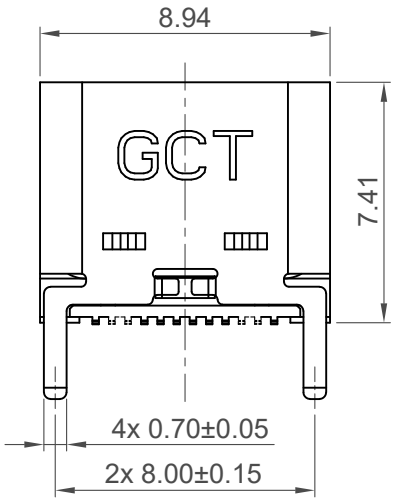

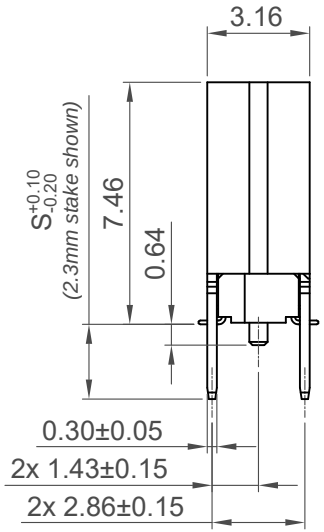

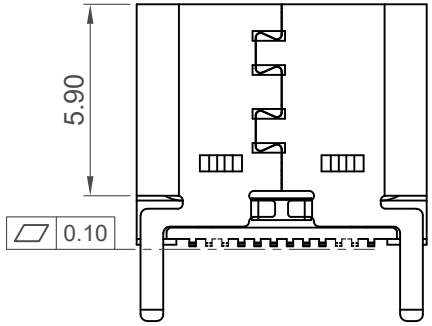

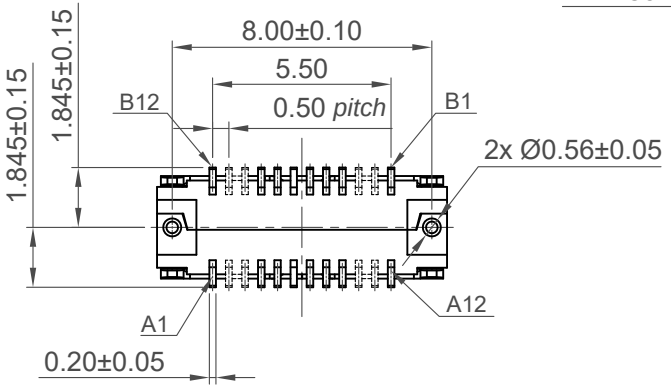

Ordering Grid

USB4160 — 03 — XXXX — C — Request Samples and Quotation

Contact Plating
03 = 3u" Gold

Shell Stake Length "S"
0070 = 0.70mm
0170 = 1.70mm
✓0230 = 2.30mm

Packing Options
C = Tape & Reel with Cap

Specifications

Material
- Insulator: PA9T, UL 94V-0, Black
- Contact: Copper Alloy
- Mid Plate: Stainless Steel
- EMI Plate: Stainless Steel
- Shell: Stainless Steel

Plating
- Contact
  - Contact Area: 3u" Au over 50µ" min. Nickel
  - Solder Tails: Gold Flash over 50µ" min. Nickel
- Shell: 30µ" min. Nickel
- Mid Plate: Clear
- EMI Plate: Clear

Electrical
- Current Rating: 5.00A collectively for VBUS pins
  6.25A collectively for GND pins
  1.25A for A5/B5 pin
  0.25A per pin for all other pins
- Voltage Rating: 48V DC
- Power Rating: 240W
- Contact Resistance: 40mΩ max initial.
  50mΩ max after test
- Dielectric Withstanding Voltage: 100V AC
- Insulation Resistance 100MΩ min

Mechanical & Environmental
- Operating Temperature: -25°C to +85°C
- Mating Force: 5 to 20 N.
- Unmated Force: 6 to 20 N after test
- Durability: 20K cycles

設計驗證 工程課 2024.01.11 發行 宜鍵科技開發股份有限公司

3FU02401710(F0294)

Part Number: USB4160		Product Description: USB3.2 Gen2, Type C Receptacle, Vertical, SMT, H=7.46mm, 24 Pin					
Drawing Date: 28th June 2022							
By	CC	Tolerances (Except as Noted) Length	Angle	Units: Metric (mm)	RoHS COMPLIANT 2011/65/EU Deca-BDE	© This drawing is confidential and copyright of Global Connector Technology, Ltd (GCT). This drawing must not be copied or disclosed without written consent. E & OE	GCT www.gct.co
Detail	Drawing Release	X.X ± 0.30	-	3rd Angle Projection			Not to Scale / Drawn By CC / Sheet No. 1/4
Revision	A2	X.XX ± 0.20					
Date	31/01/23	X.XXX ± 0.10					

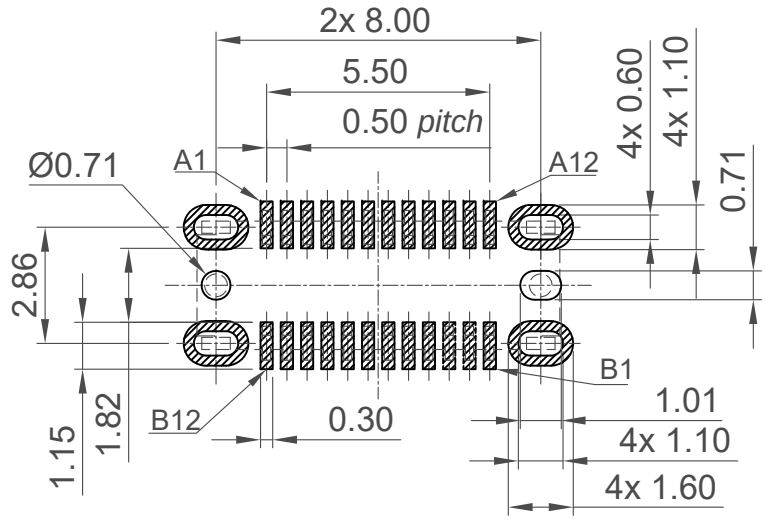

Recommended PCB Layout

Tolerance: ±0.05mm

Solder Area | Keep Out Area | Component Outline

Pin	Signal	Mating Sequence	Pin	Signal	Mating Sequence
A1	GND	First	B12	GND	First
A2	SSTXp1	Second	B11	SSRXp1	Second
A3	SSTXn1	Second	B10	SSRXn1	Second
A4	VBUS	First	B9	VBUS	First
A5	CC1	Second	B8	SBU2	Second
A6	Dp1	Second	B7	Dn2	Second
A7	Dn1	Second	B6	Dp2	Second
A8	SBU1	Second	B5	CC2	Second
A9	VBUS	First	B4	VBUS	First
A10	SSRXn2	Second	B3	SSTXn2	Second
A11	SSRXp2	Second	B2	SSTXp2	Second
A12	GND	First	B1	GND	First
SHELL		GND	SHELL		GND

設計驗證
工程課
2024.01.11
發行
鈺鏵科技開發股份有限公司

Part Number: USB4160		Product Description: USB3.2 Gen2, Type C Receptacle, Vertical, SMT, H=7.46mm, 24 Pin			
Drawing Date: 28th June 2022					
By: CC	Tolerances (Except as Noted) Length / Angle	Units: Metric (mm)	RoHS COMPLIANT 2011/65/EU Deca-BDE	© This drawing is confidential and copyright of Global Connector Technology, Ltd (GCT). This drawing must not be copied or disclosed without written consent. E & OE	GCT www.gct.co
Detail: Drawing Release	X.X ± 0.30 X.XX ± 0.20 X.XXX ± 0.10 / -	3rd Angle Projection			Not to Scale / Drawn By CC / Sheet No. 2/4
Revision: A2					
Date: 31/01/23					

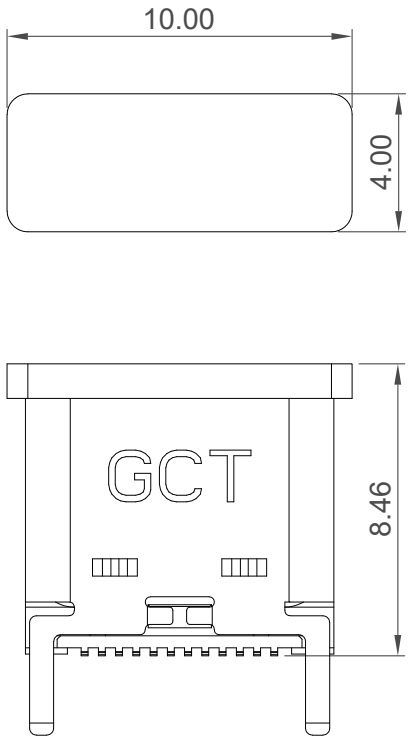

Cap Information

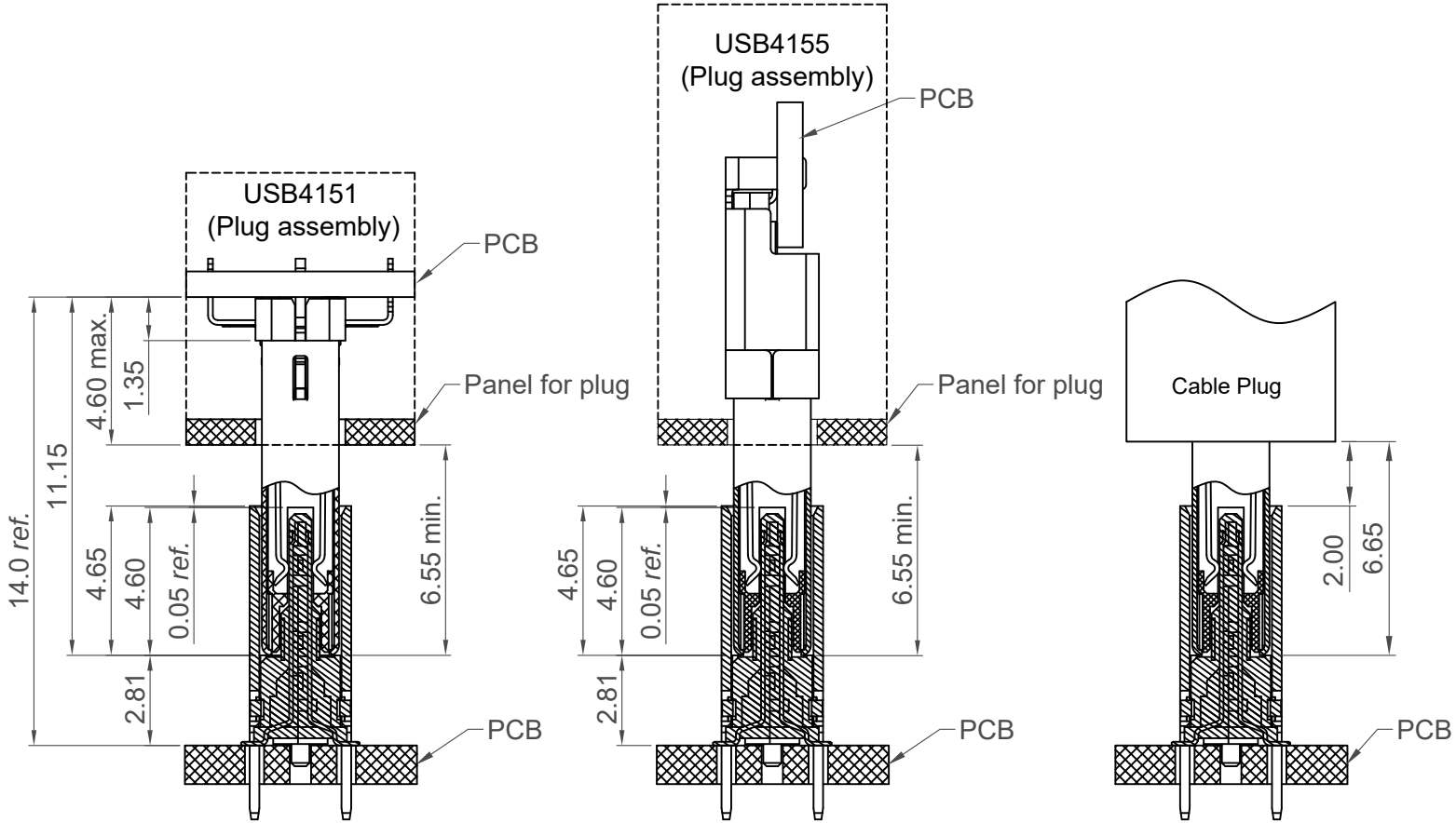

USB4160
(Receptacle assembly)

USB4160
(Receptacle assembly)

USB4160
(Receptacle assembly)

Plug and Receptacle Mating View

設計驗證
工程課
2024.01.11
發行
鈺鐘科技開發股份有限公司

Part Number		Product Description				
USB4160		USB3.2 Gen2, Type C Receptacle, Vertical, SMT, H=7.46mm, 24 Pin				
Drawing Date						
28th June 2022						
By	CC	Tolerances (Except as Noted) Length	Angle	Units: Metric (mm)	RoHS COMPLIANT 2011/65/EU Deca-BDE	© This drawing is confidential and copyright of Global Connector Technology, Ltd (GCT). This drawing must not be copied or disclosed without written consent. E & OE
Detail	Drawing Release	X.X ± 0.30 X.XX ± 0.20 X.XXX ± 0.10	-	3rd Angle Projection		
Revision	A2					
Date	31/01/23					

GCT
www.gct.co

Not to Scale	Drawn By CC	Sheet No. 3/4

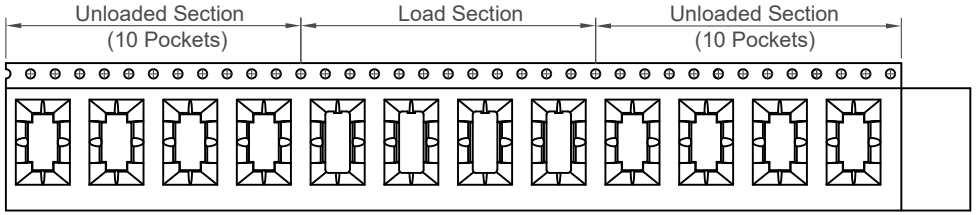

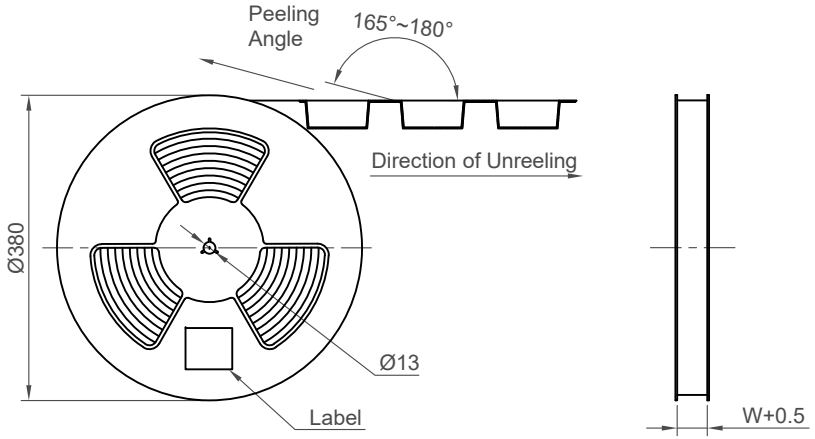

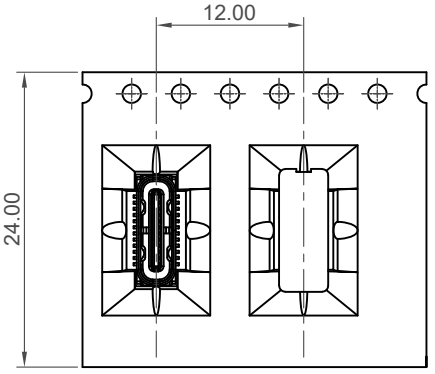

Direction of Unreeling

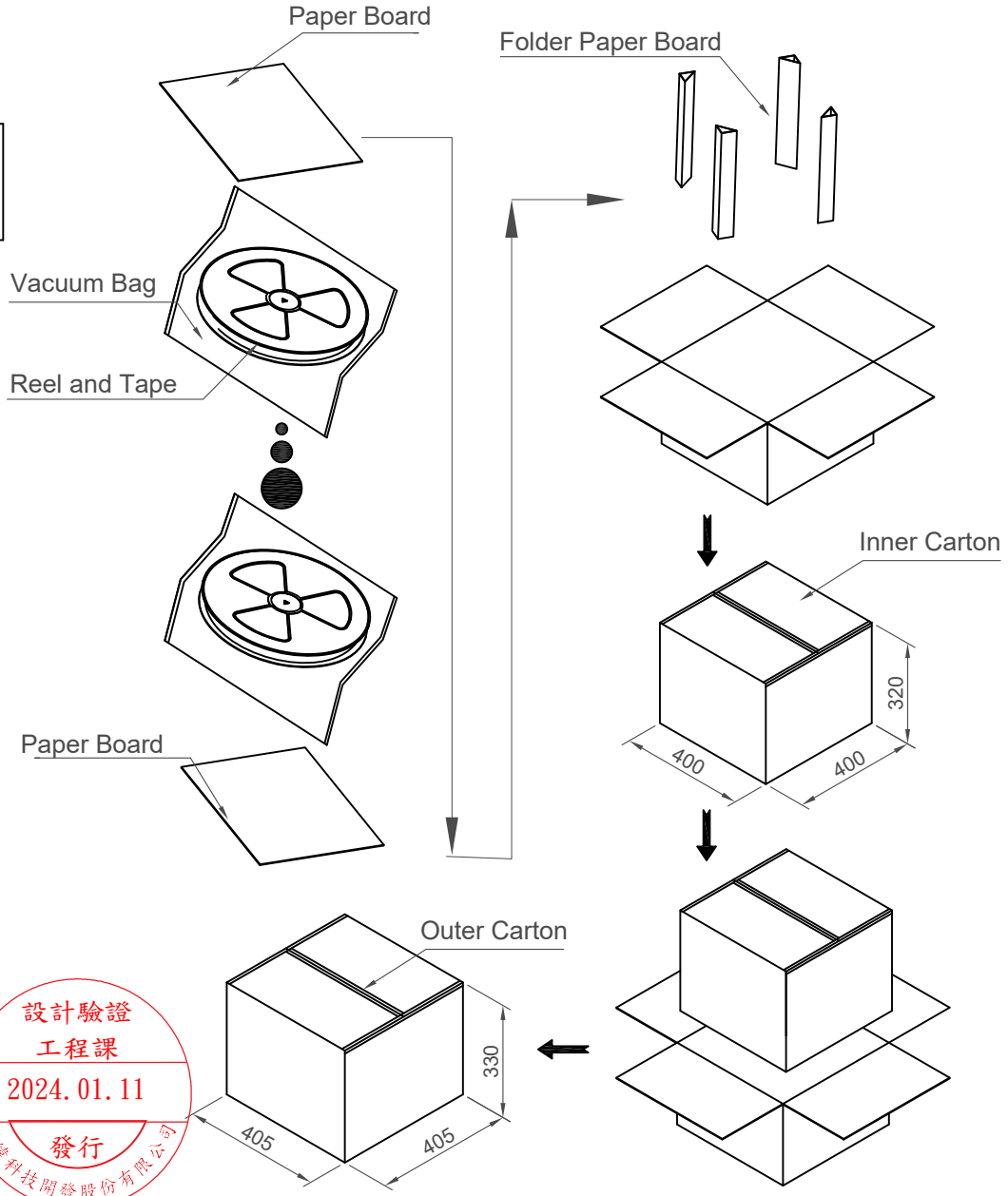

設計驗證
工程課
2024.01.11
發行
鈺鑫科技開發股份有限公司

Part Number	Pcs / Reel	Reels / Carton	Total Quantity
USB4160-03-0070-C	700	10	7,000 pcs
USB4160-03-0170-C	600	10	6,000 pcs
USB4160-03-0230-C	600	10	6,000 pcs

Part Number	USB4160
Drawing Date	28th June 2022
By	CC
Detail	Drawing Release
Revision	A2
Date	31/01/23

Product Description: USB3.2 Gen2, Type C Receptacle, Vertical, SMT, H=7.46mm, 24 Pin

Tolerances (Except as Noted): Length X.X ± 0.30, X.XX ± 0.20, X.XXX ± 0.10; Angle -

Units: Metric (mm)

3rd Angle Projection

RoHS COMPLIANT 2011/65/EU Deca-BDE

© This drawing is confidential and copyright of Global Connector Technology, Ltd (GCT). This drawing must not be copied or disclosed without written consent. E & OE

GCT
www.gct.co

Not to Scale	Drawn By CC	Sheet No. 4/4