NO.	TYPE	DIMENSION	QT'Y	REMARK
A	NUT	M4	6	Torque strength: M3 >=10 kgf/cm. M4 >=18 kgf/cm.
B	Standoff	M3*H12.4	4	
C	Standoff	M3*H13.4	4	
D	Standoff	M3*H8.2	4	
E	Standoff	M3*H8.2	1	
F	NUT	M3	4	

REV.	DATE	DESCRIPTION	BY	APVD
-	2023-04-17	ES SAMPLE VERSION	Laslie	
0	2024-02-26	RELEASE FOR PRODUCTION	Laslie	

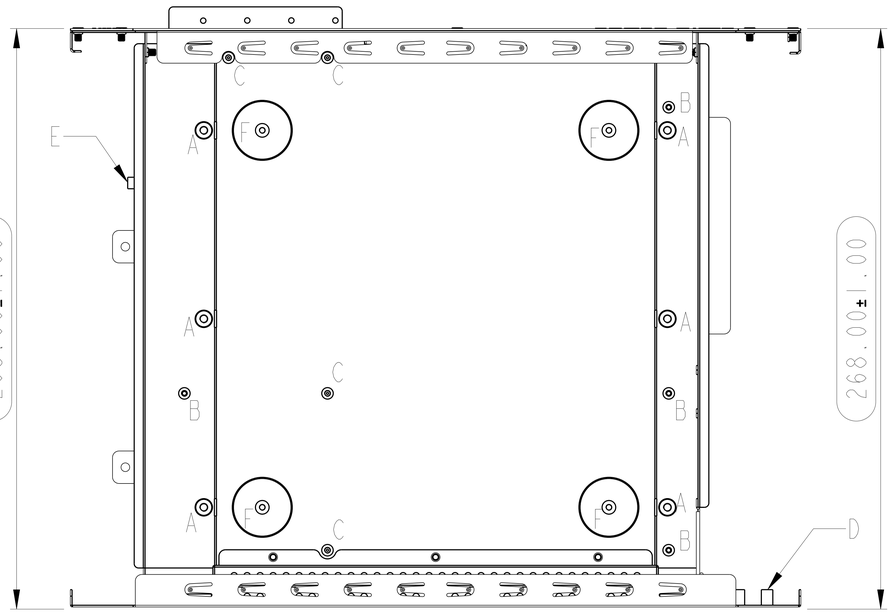

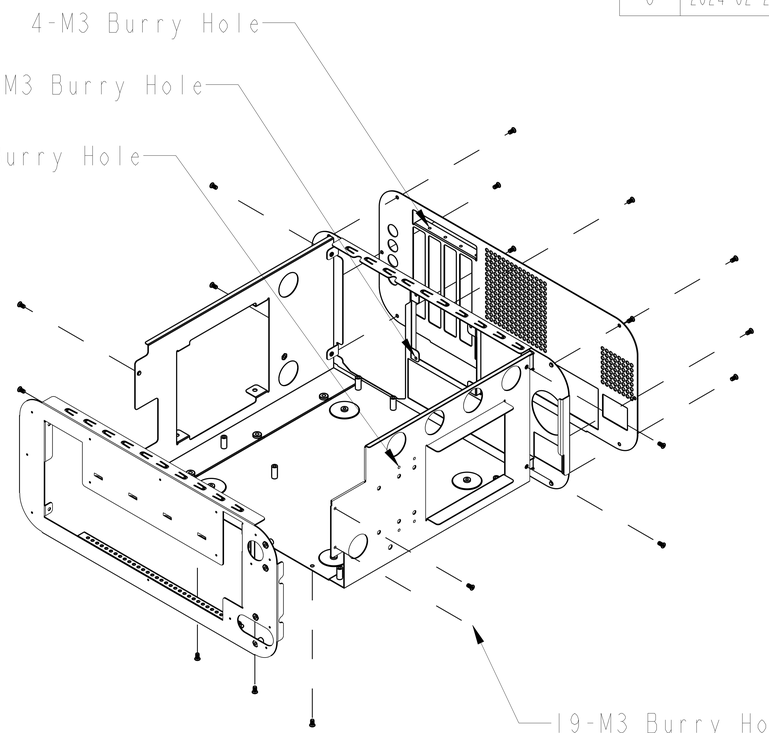

SCALE 1/2

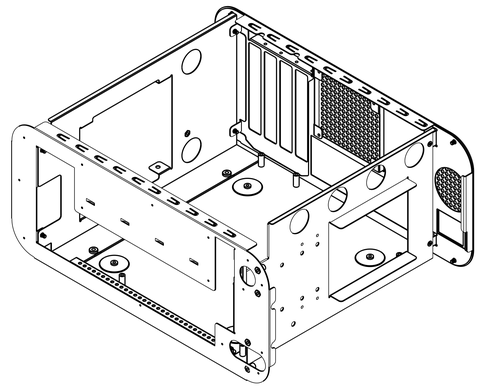

SCALE 1/2

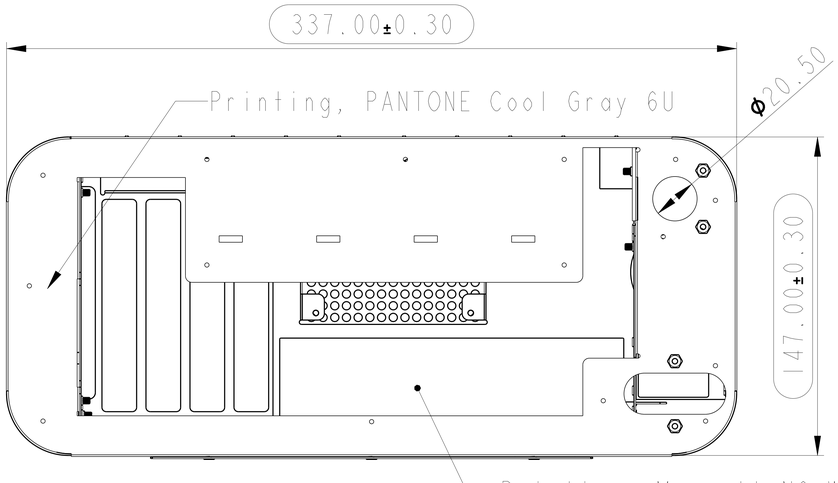

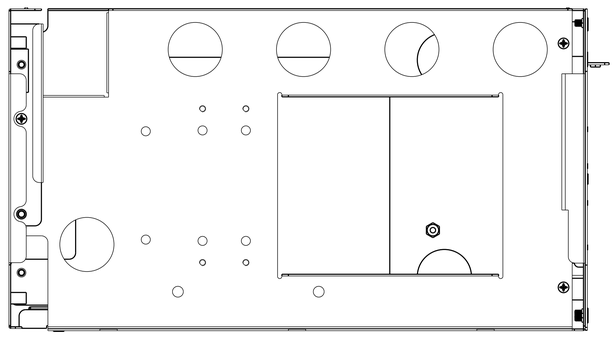

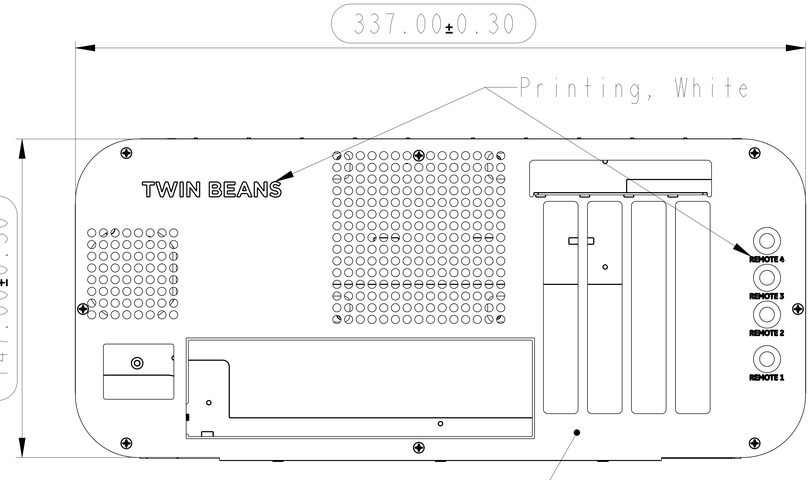

NOTE:
1. Material: SECC
2. Painting: Texture, Musell N9 & PANTONE Gray 6U.
3. Printing: PANTONE Gray 6U & White.
4. Parts Assembly whit Screws.
5. ◯ & ⌖ Inspection dimension.
6. Unspecified Dimension refer to CAD Drawing file.
7. RoHS Compliant.
8. DIVA QC Inspection Document NO.: QWI-023 (Metal W/ Painting)

RANGE OF DIMENSION	TOLERANCE CLASS DESIGNATION f	V m	V c
UP TO 30	±0.10	±0.20	±0.50
ABOVE 30~120	±0.15	±0.30	±0.80
ABOVE 120~315	±0.20	±0.50	±1.20
ABOVE 315~1000	±0.30	±0.80	±2.00
ANGLE ±1° (±1.75/100)			

THIRD ANGLE PROJECTION

DSGD by	Laslie	2023-04-17
CHK by	Ferris	2024-02-26
APVD by	Laslie	2024-02-26
APVD NO.:		

UNITS: mm | SCALE: 1/1 | SHEET: 1 OF 2 | MODEL NO.: TR 50

MATERIAL: | TREATMENT:

PART NAME: MAIN CHASSIS

PART NO.: 3MD362ME190 | REV. 0

3D FILE NAME: 0_MAIN_CHASSIS_MEDIRECO_3

DIVA Laboratories ,Ltd.

REV.	DATE	DESCRIPTION	BY	APVD

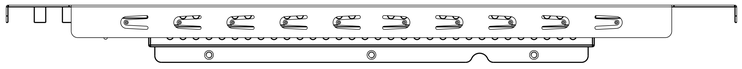

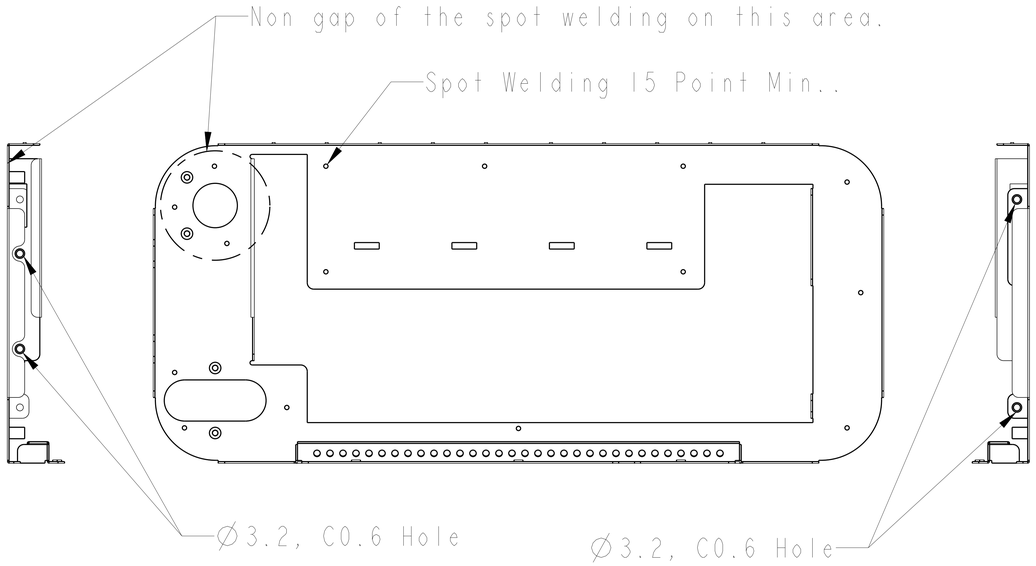

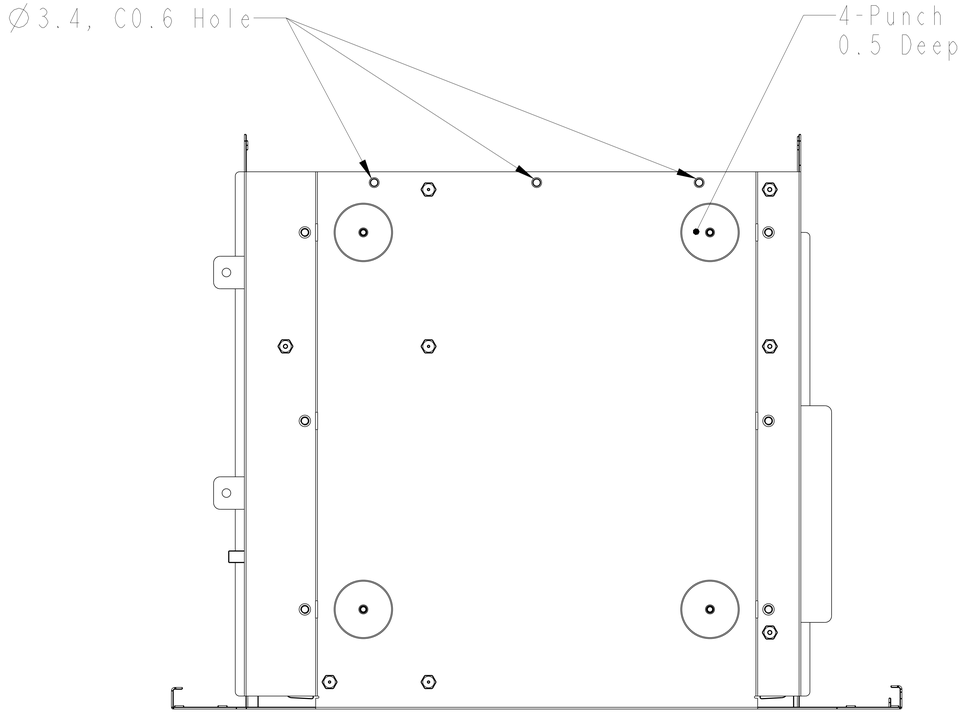

RANGE OF DIMENSION	TOLERANCE CLASS DESIGNATION f	V m	c	THIRD ANGLE PROJECTION	UNITS: mm	SCALE: 1/1	SHEET: 2 OF 2	MODEL NO.: TR 50
					MATERIAL: SECC		TREATMENT:	
UP TO 30	±0.10	±0.20	±0.50	DSGD by Laslie	2023-04-17	PART NAME: MAIN CHASSIS		
ABOVE 30~120	±0.15	±0.30	±0.80	CHK by				
ABOVE 120~315	±0.20	±0.50	±1.20	APVD by		PART NO.: 3MD362ME190	REV. 0	
ABOVE 315~1000	±0.30	±0.80	±2.00	APVD NO.:	3D FILE NAME: 0_MAIN_CHASSIS_MEDIRECO_3	DIVA Laboratories ,Ltd.		
ANGLE ±1° (±1.75/100)								