QUICKSWITCH® PRODUCTS 2.5V/3.3V QUAD 2:1 MUX/DEMUX HIGH BANDWIDTH BUS SWITCH

FEATURES:

- **N channel FET switches with no parasitic diode to Vcc**
  - *Isolation under power-off conditions*
  - *No DC path to Vcc or GND*
  - *5V tolerant in OFF and ON state*
- **5V tolerant I/Os**
- **Low Ron - 4Ω typical**
- **Flat Ron characteristics over operating range**
- **Rail-to-rail switching 0 - 5V**
- **Bidirectional dataflow with near-zero delay: no added ground bounce**
- **Excellent Ron matching between channels**
- **Vcc operation: 2.3V to 3.6V**
- **High bandwidth - up to 500MHz**
- **LVTTL-compatible control Inputs**
- **Undershoot Clamp Diodes on all switch and control Inputs**
- **Low I/O capacitance, 4pF typical**
- **Available in QSOP, SOIC, and TSSOP packages**

APPLICATIONS:

- **Hot-swapping**
- **Multiplexing/demultiplexing**
- **Low distortion analog switch**
- **Replaces mechanical relay**
- **ATM 25/155 switching**

DESCRIPTION:

The QS3VH257 HotSwitch Quad 2:1 multiplexer/demultiplexer is a high bandwidth bus switch. The QS3VH257 has very low ON resistance, resulting in under 250ps propagation delay through the switch. The Select (S) input controls the data flow. The multiplexers/demultiplexers are enabled when the Enable ($\overline{E}$) input is low. In the ON state, the switches can pass signals up to 5V. In the OFF state, the switches offer very high impedence at the terminals.

The combination of near-zero propagation delay, high OFF impedance, and over-voltage tolerance makes the QS3VH257 ideal for high performance communication applications.

The QS3VH257 is characterized for operation from -40°C to +85°C.

FUNCTIONAL BLOCK DIAGRAM

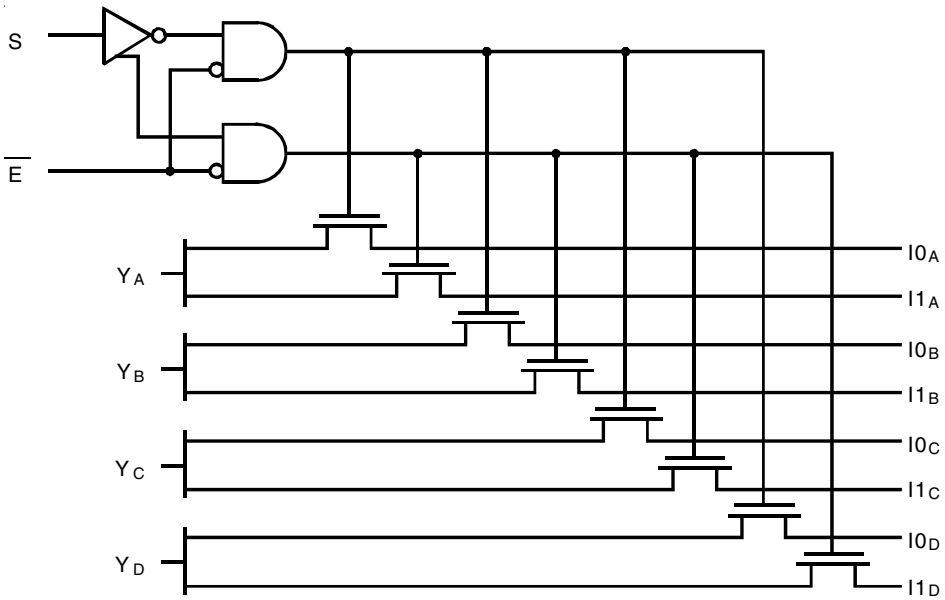

The IDT logo is a registered trademark of Integrated Device Technology, Inc.

© 2019 Renesas Electronics Corporation

PIN CONFIGURATION

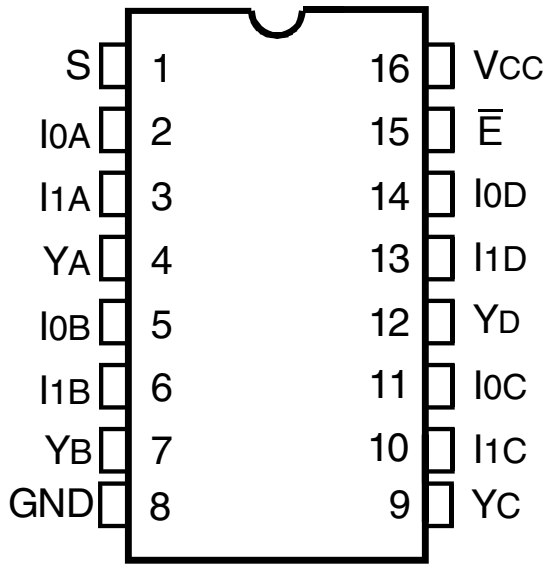

QSOP/ SOIC/ TSSOP
TOP VIEW

ABSOLUTE MAXIMUM RATINGS(1)

Symbol	Description	Max	Unit
V_{TERM}(2)	SupplyVoltage to Ground	–0.5 to +4.6	V
V_{TERM}(3)	DC Switch Voltage V_S	–0.5 to +5.5	V
V_{TERM}(3)	DC Input Voltage V_{IN}	–0.5 to +5.5	V
V_{AC}	AC Input Voltage (pulse width ≤20ns)	–3	V
I_{OUT}	DC Output Current (max. sink current/pin)	120	mA
T_{STG}	Storage Temperature	–65 to +150	°C

NOTES:
1. Stresses greater than those listed under ABSOLUTE MAXIMUM RATINGS may cause permanent damage to the device. This is a stress rating only and functional operation of the device at these or any other conditions above those indicated in the operational sections of this specification is not implied. Exposure to absolute maximum rating conditions for extended periods may affect reliability.
2. V_{CC} terminals.
3. All terminals except V_{CC} .

CAPACITANCE (T_A = +25°C, F = 1MHz, V_{IN} = 0V, V_{OUT} = 0V)

Symbol	Parameter(1)		Typ.	Max.	Unit
C_{IN}	Control Inputs		3	5	pF
$C_{I/O}$	Quickswitch Channels (Switch OFF)	Demux	4	6	pF
		Mux	7	9	
$C_{I/O}$	Quickswitch Channels (Switch ON)	Demux	10	15	pF
		Mux	10	15	

NOTE:
1. This parameter is guaranteed but not production tested.

PIN DESCRIPTION

Pin Names	I/O	Description
Ixx	I	Data Inputs
S	I	Select Input
$\overline{E}$	I	Enable Input
Y_A - Y_D	O	Data Outputs

FUNCTION TABLE(1)

Inputs		Outputs				
$\overline{E}$	S	Y_A	Y_B	Y_C	Y_D	Function
H	X	Z	Z	Z	Z	Disable
L	L	$I0_A$	$I0_B$	$I0_C$	$I0_D$	Select 0
L	H	$I1_A$	$I1_B$	$I1_C$	$I1_D$	Select 1

NOTE:
1. H = HIGH Voltage Level
   L = LOW Voltage Level
   X = Don't Care
   Z = High-Impedence

© 2019 Renesas Electronics Corporation

DC ELECTRICAL CHARACTERISTICS OVER OPERATING RANGE

Following Conditions Apply Unless Otherwise Specified:
Industrial: T_A = –40°C to +85°C, V_{CC} = 3.3V ±0.3V

Symbol	Parameter	Test Conditions			Min.	Typ.(1)	Max.	Unit
V_{IH}	Input HIGH Voltage	Guaranteed Logic HIGH	V_{CC} = 2.3V to 2.7V		1.7	—	—	V
		for Control Inputs	V_{CC} = 2.7V to 3.6V		2	—	—	
V_{IL}	Input LOW Voltage	Guaranteed Logic LOW	V_{CC} = 2.3V to 2.7V		—	—	0.7	V
		for Control Inputs	V_{CC} = 2.7V to 3.6V		—	—	0.8	
I_{IN}	Input Leakage Current (Control Inputs)	0V ≤ V_{IN} ≤ V_{CC}			—	—	±1	µA
I_{OZ}	Off-State Current (Hi-Z)	0V ≤ V_{OUT} ≤ 5V, Switches OFF			—	—	±1	µA
I_{OFF}	Data Input/Output Power Off Leakage	V_{IN} or V_{OUT} 0V to 5V, V_{CC} = 0V			—	—	±1	µA
R_{ON}	Switch ON Resistance	V_{CC} = 2.3V	V_{IN} = 0V	I_{ON} = 30mA	—	6	8	Ω
		Typical at V_{CC} = 2.5V	V_{IN} = 1.7V	I_{ON} = 15mA	—	7	9	
		V_{CC} = 3V	V_{IN} = 0V	I_{ON} = 30mA	—	4	6	
			V_{IN} = 2.4V	I_{ON} = 15mA	—	5	8	

NOTE:
1. Typical values are at V_{CC} = 3.3V and T_A = 25°C.

TYPICAL ON RESISTANCE vs V_{IN} AT V_{CC} = 3.3V

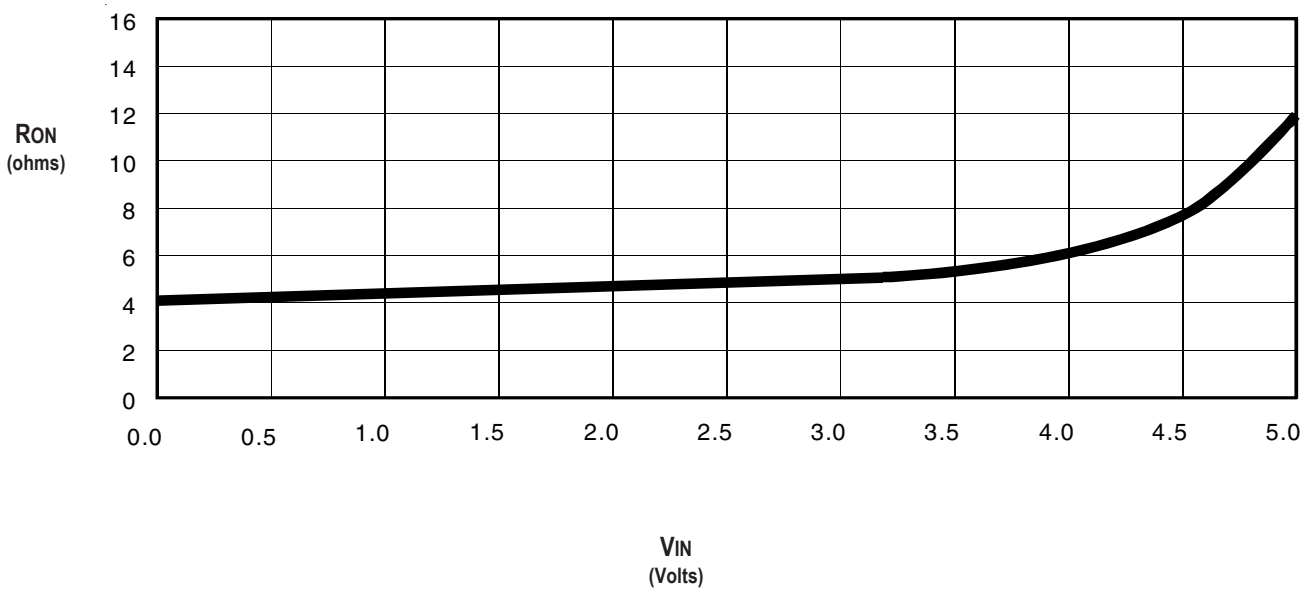

© 2019 Renesas Electronics Corporation

POWER SUPPLY CHARACTERISTICS

Symbol	Parameter	Test Conditions[1]	Min.	Typ.	Max.	Unit
I_{CCQ}	Quiescent Power Supply Current	V_{CC} = Max., V_{IN} = GND or V_{CC}, f = 0	—	2	4	mA
ΔI_{CC}	Power Supply Current [2,3] per Input HIGH	V_{CC} = Max., V_{IN} = 3V, f = 0 per Control Input	—	—	30	µA
I_{CCD}	Dynamic Power Supply Current[4]	V_{CC} = 3.3V, A and B Pins Open, Control Inputs Toggling @ 50% Duty Cycle	See Typical I_{CCD} vs Enable Frequency graph below			

NOTES:
1. For conditions shown as Min. or Max., use the appropriate values specified under DC Electrical Characteristics.
2. Per input driven at the specified level. Mux/demux pins do not contribute to ΔIcc.
3. This parameter is guaranteed but not tested.
4. This parameter represents the current required to switch internal capacitance at the specified frequency. The mux/demux inputs do not contribute to the Dynamic Power Supply Current. This parameter is guaranteed but not production tested.

TYPICAL I_{CCD} vs ENABLE FREQUENCY CURVE AT V_{CC} = 3.3V

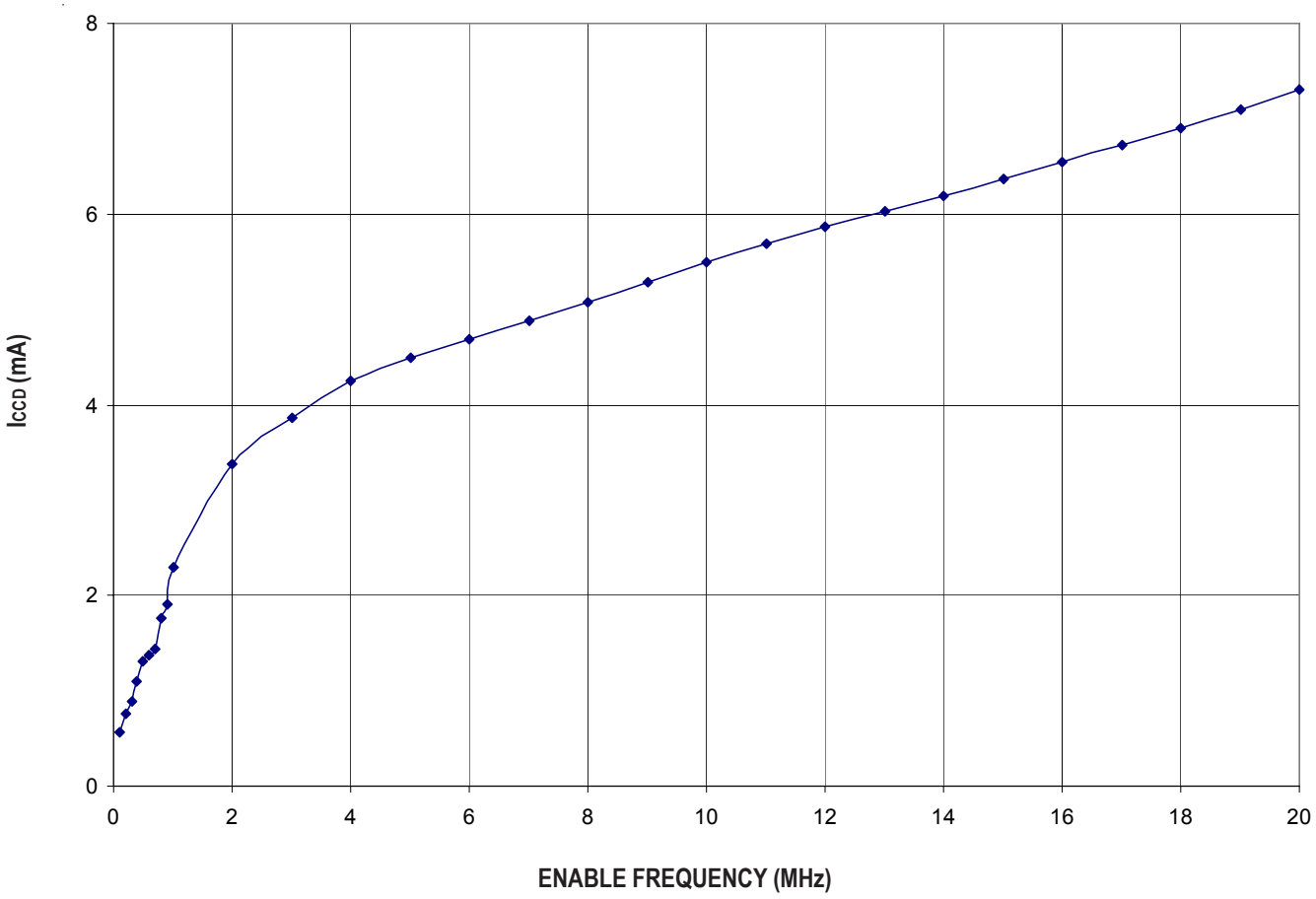

© 2019 Renesas Electronics Corporation

SWITCHING CHARACTERISTICS OVER OPERATING RANGE

T_A = -40°C to +85°C

Symbol	Parameter	V_{CC} = 2.5 ± 0.2V (1)		V_{CC} = 3.3 ± 0.3V (1)		Unit
		Min. (4)	Max.	Min. (4)	Max.	
t_{PLH} t_{PHL}	Data Propagation Delay(2,3) Yx to Ixx or Ixx to Yx	—	0.2	—	0.2	ns
t_{SEL}	Select Time S to Yx	1.5	9	1.5	8	ns
t_{PZH} t_{PZL}	Enable Time S to Ixx	1.5	9	1.5	9	ns
t_{PHZ} t_{PLZ}	Disable Time S to Ixx	1.5	8	1.5	8	ns
t_{PZH} t_{PZL}	Enable Time $\overline{E}$ to Yx or Ixx	1.5	9	1.5	8	ns
t_{PHZ} t_{PLZ}	Disable Time $\overline{E}$ to Yx or Ixx	1.5	8	1.5	8	ns
$f_{\overline{E}orS}$	Operating Frequency - Enable(2,5)	—	10	—	20	MHz

NOTES:

1. See Test Conditions under TEST CIRCUITS AND WAVEFORMS.
2. This parameter is guaranteed but not production tested.
3. The bus switch contributes no propagation delay other than the RC delay of the ON resistance of the switch and the load capacitance. The time constant for the switch alone is of the order of 0.2ns at C_L = 50pF. Since this time constant is much smaller than the rise and fall times of typical driving signals, it adds very little propagation delay to the system. Propagation delay of the bus switch, when used in a system, is determined by the driving circuit on the driving side of the switch and its interaction with the load on the driven side.
4. Minimums are guaranteed but not production tested.
5. Maximum toggle frequency for S or $\overline{E}$ control input (pass voltage > V_{CC}, V_{IN} = 5V, $R_{LOAD} \geq 1M\Omega$, no C_{LOAD}).

© 2019 Renesas Electronics Corporation

SOME APPLICATIONS FOR HOTSWITCH PRODUCTS

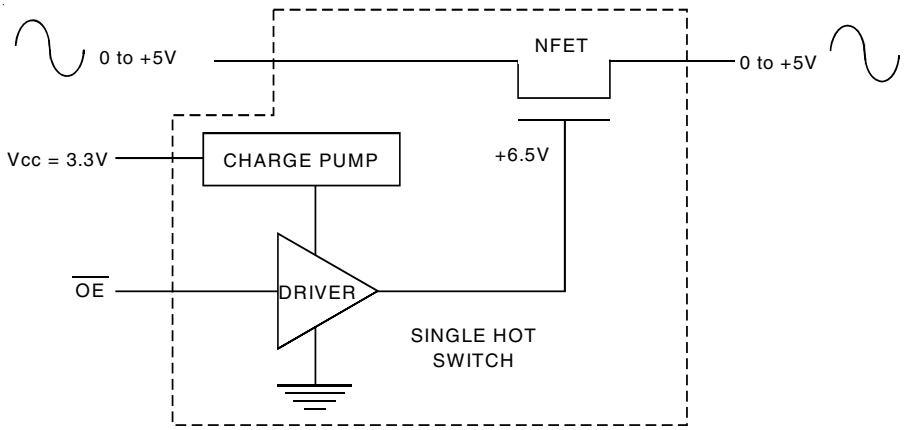

Rail-to-Rail Switching

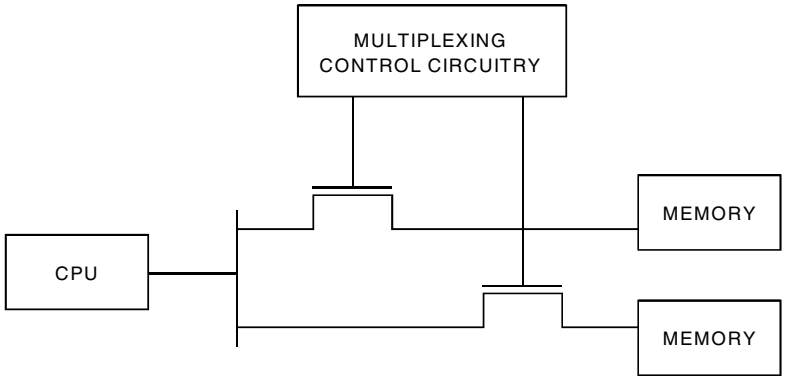

Multiplexing / Demultiplexing

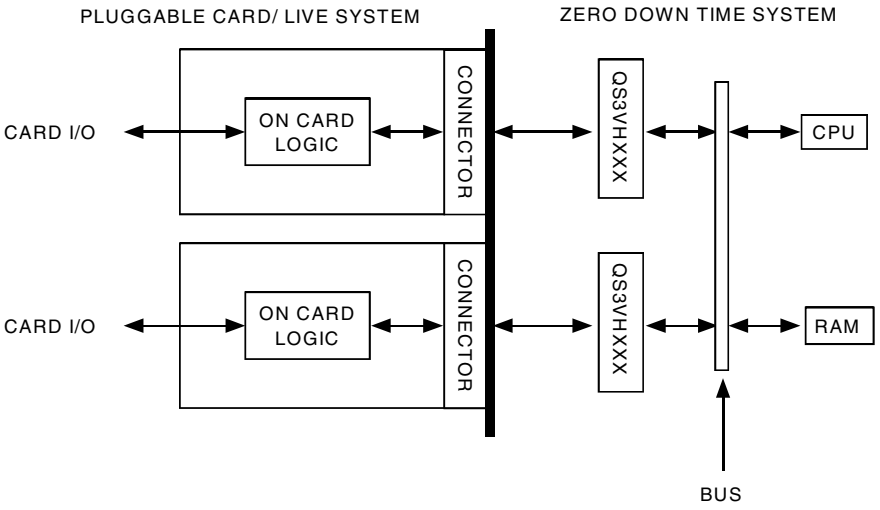

Hot-Swapping

© 2019 Renesas Electronics Corporation

TEST CIRCUITS AND WAVEFORMS

TEST CONDITIONS

Symbol	$V_{CC}^{(1)}$= 3.3V ± 0.3V	$V_{CC}^{(2)}$= 2.5V ± 0.2V	Unit
V_{LOAD}	6	2 x Vcc	V
V_{IH}	3	Vcc	V
V_T	1.5	Vcc/2	V
V_{LZ}	300	150	mV
V_{HZ}	300	150	mV
C_L	50	30	pF

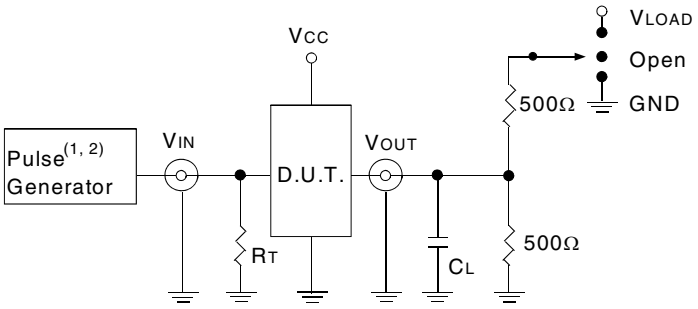

Test Circuits for All Outputs

DEFINITIONS:
C_L = Load capacitance: includes jig and probe capacitance.
R_T = Termination resistance: should be equal to Z_{OUT} of the Pulse Generator.

NOTES:
1. Pulse Generator for All Pulses: Rate ≤ 10MHz; t_F ≤ 2.5ns; t_R ≤ 2.5ns.
2. Pulse Generator for All Pulses: Rate ≤ 10MHz; t_F ≤ 2ns; t_R ≤ 2ns.

SWITCH POSITION

Test	Switch
t_{PLZ}/t_{PZL}	V_{LOAD}
t_{PHZ}/t_{PZH}	GND
t_{PD}	Open

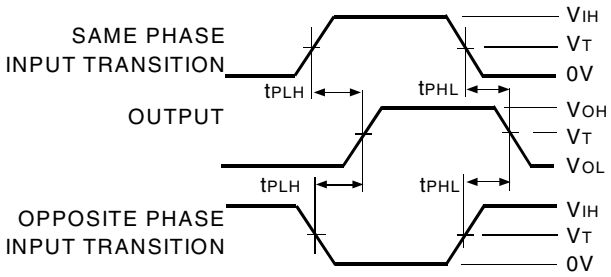

Propagation Delay

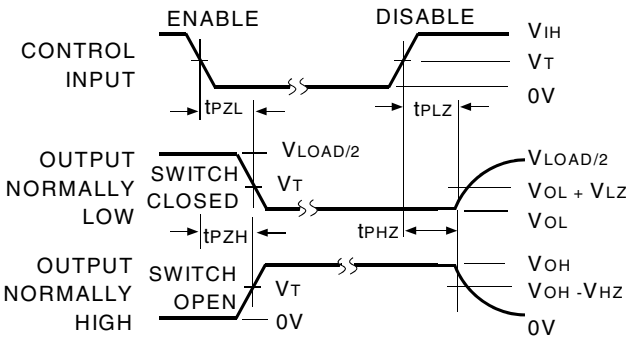

NOTE:
1. Diagram shown for input Control Enable-LOW and input Control Disable-HIGH.

Enable and Disable Times

© 2019 Renesas Electronics Corporation

ORDERING INFORMATION

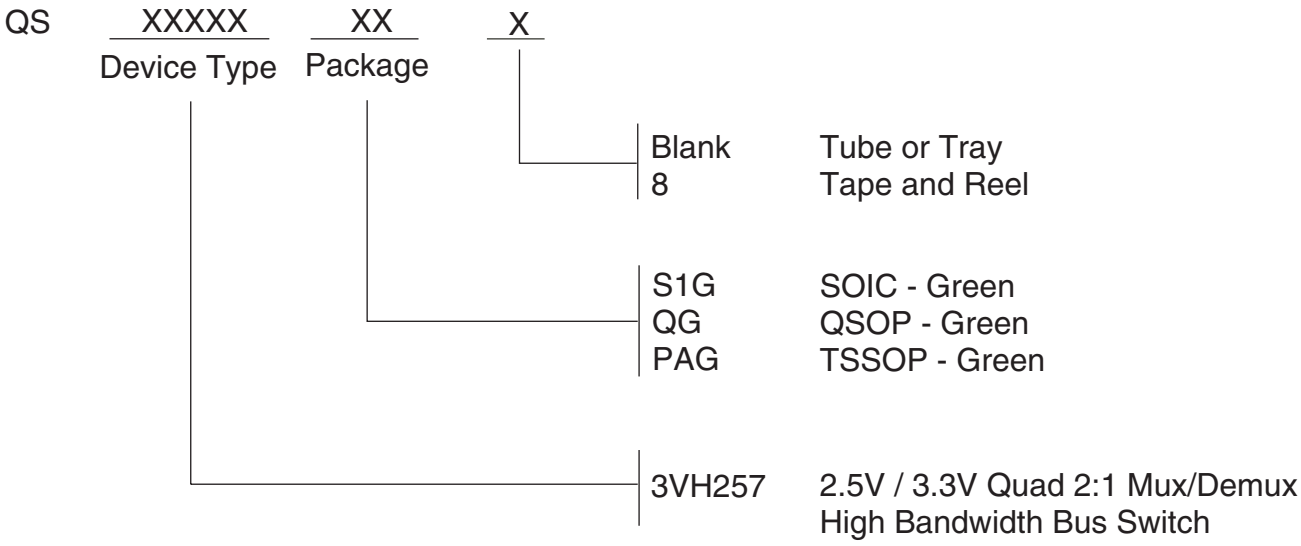

Datasheet Document History

09/01/08	Pg. 4, 8	Revise I_{CCQ} Typ. and Max. Remove non green package version and updated the ordering information by removing the "IDT" notation.
02/24/14	Pg. 8	Updated the Ordering Information by Adding Tape and Reel information.

IMPORTANT NOTICE AND DISCLAIMER

RENESAS ELECTRONICS CORPORATION AND ITS SUBSIDIARIES (“RENESAS”) PROVIDES TECHNICAL SPECIFICATIONS AND RELIABILITY DATA (INCLUDING DATASHEETS), DESIGN RESOURCES (INCLUDING REFERENCE DESIGNS), APPLICATION OR OTHER DESIGN ADVICE, WEB TOOLS, SAFETY INFORMATION, AND OTHER RESOURCES “AS IS” AND WITH ALL FAULTS, AND DISCLAIMS ALL WARRANTIES, EXPRESS OR IMPLIED, INCLUDING, WITHOUT LIMITATION, ANY IMPLIED WARRANTIES OF MERCHANTABILITY, FITNESS FOR A PARTICULAR PURPOSE, OR NON-INFRINGEMENT OF THIRD-PARTY INTELLECTUAL PROPERTY RIGHTS.

These resources are intended for developers who are designing with Renesas products. You are solely responsible for (1) selecting the appropriate products for your application, (2) designing, validating, and testing your application, and (3) ensuring your application meets applicable standards, and any other safety, security, or other requirements. These resources are subject to change without notice. Renesas grants you permission to use these resources only to develop an application that uses Renesas products. Other reproduction or use of these resources is strictly prohibited. No license is granted to any other Renesas intellectual property or to any third-party intellectual property. Renesas disclaims responsibility for, and you will fully indemnify Renesas and its representatives against, any claims, damages, costs, losses, or liabilities arising from your use of these resources. Renesas' products are provided only subject to Renesas' Terms and Conditions of Sale or other applicable terms agreed to in writing. No use of any Renesas resources expands or otherwise alters any applicable warranties or warranty disclaimers for these products.

(Disclaimer Rev.1.01 Jan 2024)

Corporate Headquarters

TOYOSU FORESIA, 3-2-24 Toyosu,
Koto-ku, Tokyo 135-0061, Japan
www.renesas.com

Contact Information

For further information on a product, technology, the most up-to-date version of a document, or your nearest sales office, please visit www.renesas.com/contact-us/.

Trademarks

Renesas and the Renesas logo are trademarks of Renesas Electronics Corporation. All trademarks and registered trademarks are the property of their respective owners.

© 2024 Renesas Electronics Corporation. All rights reserved.

Mouser Electronics

Authorized Distributor

Click to View Pricing, Inventory, Delivery & Lifecycle Information:

Renesas Electronics:

QS3VH257PAG8 QS3VH257QG8 QS3VH257PAG QS3VH257S1G QS3VH257S1G8 QS3VH257QG