RoHS & Halogen Free & REACH Compliance.

SPECIFICATION FOR APPROVAL

Customer：

Customer P/N:

Drawing No：

Quantity： 0 **Pcs.** **Date：** 2024/02/22

Chilisin P/N： MHCI06030-2R2M-R8

SPECIFICATION ACCEPTED BY:	
COMPONENT ENGINEER	
ELECTRICAL ENGINEER	
MECHANICAL ENGINEER	
APPROVED	
REJECTED	

奇力新電子股份有限公司
Chilisin Electronics Corp
No. 29, Alley 301, Tehhsin Rd.,
Hukou,Hsinchu 303, Taiwan
TEL：+886-3- 599-2646
FAX：+886-3- 599-9176
E-mail：sales@chilisin.com
http：//www.chilisin.com

東莞奇力新電子(東莞廠)有限公司
Chilisin Electronics (Dongguan) Co., Ltd.
No. 78, Puxing Rd., Yuliangwei Administration Area,
Qingxi Town, Dongguan City, Guangdong,China
TEL：+86-769-8773-0251~3
FAX： +86-769-8773-0232
E-mail：cect@chilisin.com

奇力新電子(越南廠)有限公司
Chilisin Electronics (Vietnam) Limited
No 143 - 145, Road No 10, VSIP Hai Phong,
Lap Le Commune, Thuy Nguyen Dist,
Haiphong City, Vietnam
Tel：84-316 255 688 Fax：84-316 255 689

奇力新電子(湖南廠)有限公司
HuNan Chilisin Electronics Technology Co., Ltd
No. 8, Shaziao Liangshuijing Town, Yuanling
County, Huaihua City, Hunan Province 419601,
China
Tel：86-745-867-5882
E-mail：cect@chilisin.com

Applied by	Checked by	Approved by

MHCI06030 Series Specification

1 Scope:

This specification applies to large current and low loss SMD shielding power inductor.

2 Part Numbering:

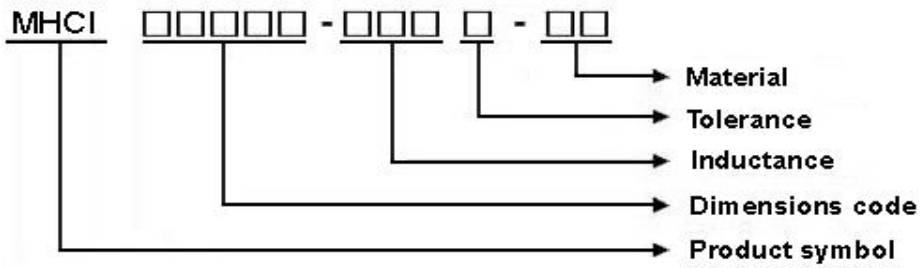

3 Rating:

Operating Temperature: -55℃~125℃(Including self - temperature rise)

Storage Temperature: (on tape & reel): -20°C to +40°C; 75% RH max.

4 Marking:

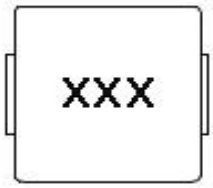

Marking : XXX

Marking color : Black

5 Standard Testing Condition

	Unless otherwise specified	In case of doubt
Temperature	Ordinary Temperature(15 to 35℃)	20 to 30℃
Humidity	Ordinary Humidity(25 to 85% RH)	50 to 80 %RH

MHCI06030 Series Specification

6 Configuration and Dimensions:

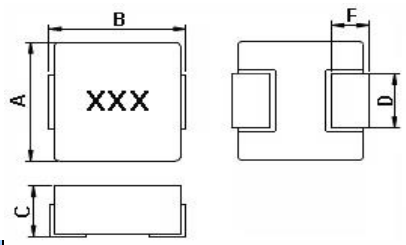

Dimensions in mm

TYPE	MHCI06030
A	6.6±0.2
B	7.3Max.
C	3.0Max.
D	2.9Typ.
F	1.6±0.5

7 Electrical Characteristics:

Part No.	Inductance (uH)	Tolerance (±%)	Test Freq.	Irms(A) Typ.	Isat(A) Typ.	RDC(mΩ) Max.	Marking
MHCI06030-R10M-R8	0.1	20	100kHz,0.5V	37	45	1.5(1.3typ)	R10
MHCI06030-R22M-R8	0.22	20	100kHz,0.5V	23	40	2.8(2.5typ)	R22
MHCI06030-R33M-R8	0.33	20	100kHz,0.5V	20	33	4.2(4.0typ)	R33
MHCI06030-R47M-R8	0.47	20	100kHz,0.5V	16.5	27	5.5(5.0typ)	R47
MHCI06030-R56M-R8	0.56	20	100kHz,0.5V	16.5	27	5.5(5.0typ)	R56
MHCI06030-R68M-R8	0.68	20	100kHz,0.5V	15	24	6.3(5.7typ)	R68
MHCI06030-R82M-R8	0.82	20	100kHz,0.5V	13	23	8.0(7.5typ)	R82
MHCI06030-1R0M-R8	1	20	100kHz,0.5V	12	22	10(9.0typ)	1R0
MHCI06030-1R5M-R8	1.5	20	100kHz,0.5V	9.5	18	15(13.5typ)	1R5
MHCI06030-1R8M-R8	1.8	20	100kHz,0.5V	9.5	14	15(13.5typ)	1R8
MHCI06030-2R2M-R8	2.2	20	100kHz,0.5V	8.5	14	20(17.0typ)	2R2
MHCI06030-3R3M-R8	3.3	20	100kHz,0.5V	6	12	35(32.0typ)	3R3
MHCI06030-4R7M-R8	4.7	20	100kHz,0.5V	5.5	9	40(35.0typ)	4R7
MHCI06030-5R6M-R8	5.6	20	100kHz,0.5V	5.5	8	40(35.0typ)	5R6
MHCI06030-6R8M-R8	6.8	20	100kHz,0.5V	4.5	8	60(54.0typ)	6R8
MHCI06030-150M-R8	15	20	100kHz,0.5V	3	5	122(111typ)	150
MHCI06030-220M-R8	22	20	100kHz,0.5V	3	3.2	145(130typ)	220
MHCI06030-330M-R8	33	20	100kHz,0.5V	2	3	270(245typ)	330

Note:

1.Operating temperature range -55℃~125℃(Including self - temperature rise)

2.Isat for Inductance drop 30% from its value without current.

3.Irms for a 40℃ temperature rise from 25℃ ambient.

4.The part temperature (ambient + temp rise) should not exceed 125°C under worst case operating conditions.

MHCI06030 Series Specification

Circuit design 125°C under worst case operating conditions. Component placement, PWB trace size and thickness, airflow and other cooling provisions all affect the part temperature. Part temperature should be verified in the end application.

5.Absolute maximum voltage 30V DC. (Based on test method, it may not the same under different application, it is recommended to verify first.)

MHCI06030 Series Specification

8 MHCI06030 Series

8.1 Construction:

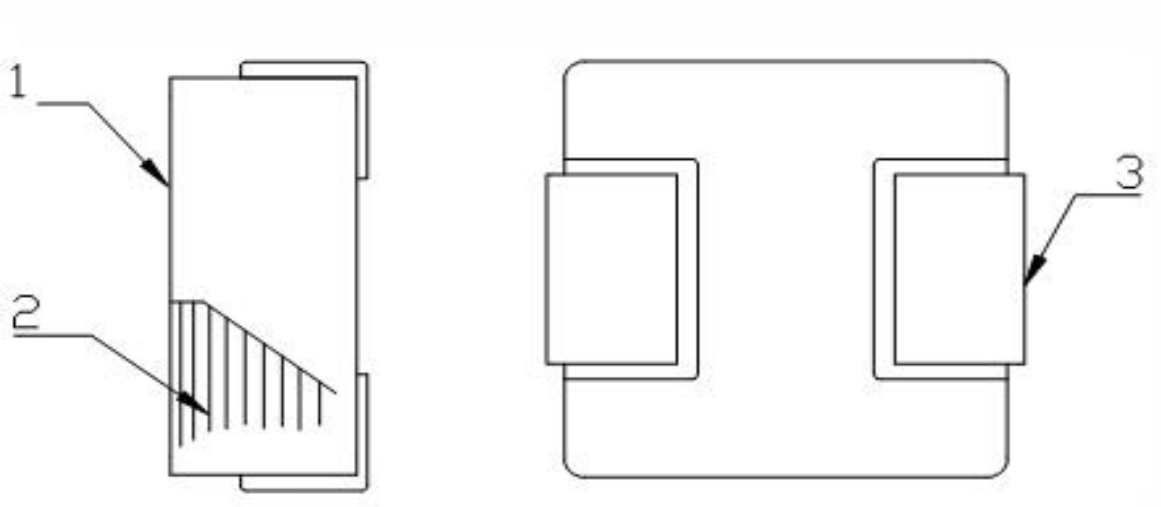

8.2 Material List:

No	Part	Material
1	Core	Magnetic Metal Powder
2	Wire	Copper Wire
3	Terminal	Terminal Copper

MHCI06030 Series Specification

9 Packaging:

9.1 Packaging -Cover Tape

The force for tearing off cover tape is 10 to 130 grams in the arrow direction.

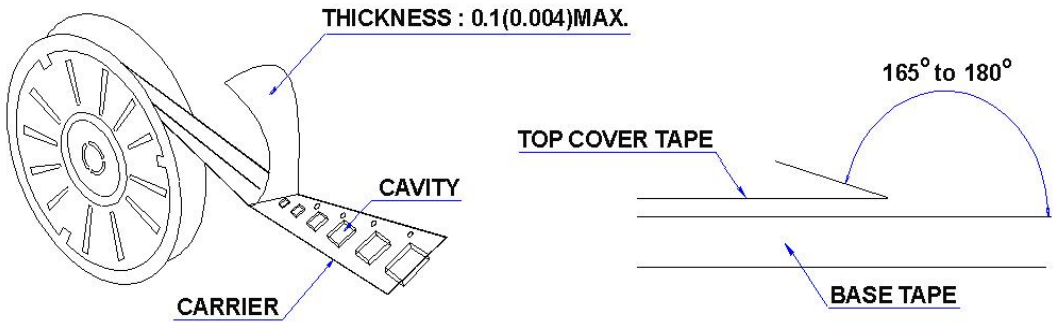

9.2 Packaging Quantity

TYPE	PCS/REEL
MHCI06030	1000

9.3 Reel Dimensions

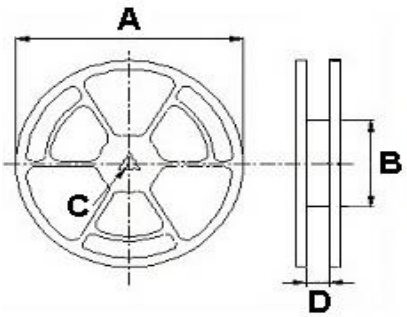

Dimensions in mm

TYPE	A	B	C	D
MHCI06030	330	100	13	16

MHCI06030 Series Specification

9 Packaging:

9.4 Tape Dimensions in mm

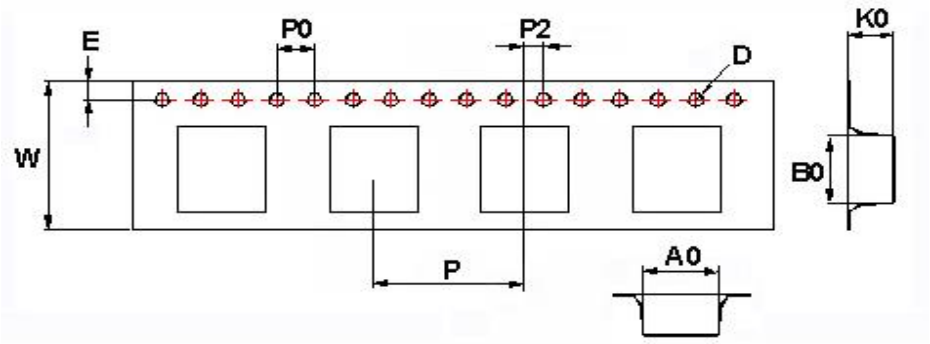

TYPE	A0	B0	K0	D	E	W	P	P0	P2
MHCI06030	6.9	7.6	3.4	1.55	1.75	16	12	4	2

10 Recommended Land Pattern:

PAD LAYOUT

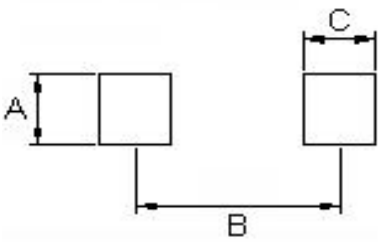

Dimensions in mm

TYPE	A(in/mm)	B(in/mm)	C(in/mm)
MHCI06030	0.138/3.5	0.238/6.05	0.093/2.35

11 Note:

1. Please make sure that your product has been evaluated and confirmed against your specifications when our product is mounted to your product.
2. Do not knock nor drop.
3. All the items and parameters in this product specification have been prescribed on the premise that our product is used for the purpose,under the condition and in the environment agreed upon between you and us. You are requested not to use our product deviating from such agreement.
4. Please keep the distance between transformer/coil and other components (refer to the standard IEC 950)
5. The moisture sensitivity level (MSL) of products is classified as level 1.

MHCI06030 Series Specification

12 Graph: MHCI06030-2R2M-R8

