



設計驗證
工程課
2024.02.07
發行
宏碁科技開發股份有限公司

國 輝 螺 絲 工 業 股 份 有 限 公 司

KOU FEI SCREW INDUSTRIAL CO.,LTD.

戴興精密工業有限公司

DAI SHING ACCURATE INDUSTRIAL CO.,LTD.

承　　認　　書

APPROVE DATA

客戶名稱：鈺緯科技開發股份有限公司

料號：**3GSA4010P15** (G0068)

規格名稱：**M4+0.7PX10/2(6)LP-NI**

品名：**SCREW**

承認簽署
設計驗證 工程課 2024.02.07 發行 鈺緯科技開發股份有限公司

台灣省新北市新莊區化成路195巷12號

TEL:02-29923082 29924278 FAX:02-29924279 e-mail:k29923082@yahoo.com.tw

中國大陸廠

國輝五金製品廠

廣東省東莞市虎門鎮路東工業區

TEL:0769-5562490 FAX:0769-5562412

輝鴻五金製品廠

廣東省東管市塘廈蓮湖工業區

TEL:0769-7914001 FAX:0769-7914003

東莞國昆五金製品有限公司

廣東省東莞市塘廈鎮蓮湖工業區東六橫路

TEL:0769-7933071 FAX:0769-7933075

國輝(昆山)五金製品廠

江蘇省昆山市陸揚鎮迎賓路11號

TEL:0512-57644337 FAX:0512-57644327

各類螺絲.華司.螺母生產製造及轉軸(hinge)之設計及組裝

國輝螺絲工業(股)公司
KOU FEI SCREW INDUSTRIAL CO., LTD.

戴興精密工業有限公司
DAI SHING ACCURATE INDUSTRIAL CO.,LTD.

DATE:2024/2/2

CUSTOMER	鈺緯科技開發股份有限公司		
PART NO	3GSA4010P15(G0068)	**MATERIAL**	LOW-CARBON STEEL,S22C
HEAD TYPE	P-HEAD	**FINISH**	NI
HEAT TREATMENT	☐ YES ■ NO	**DESCRIPTION**	M4+0.7PX10/2(6)LP-NI

TECHNICAL DRAWING

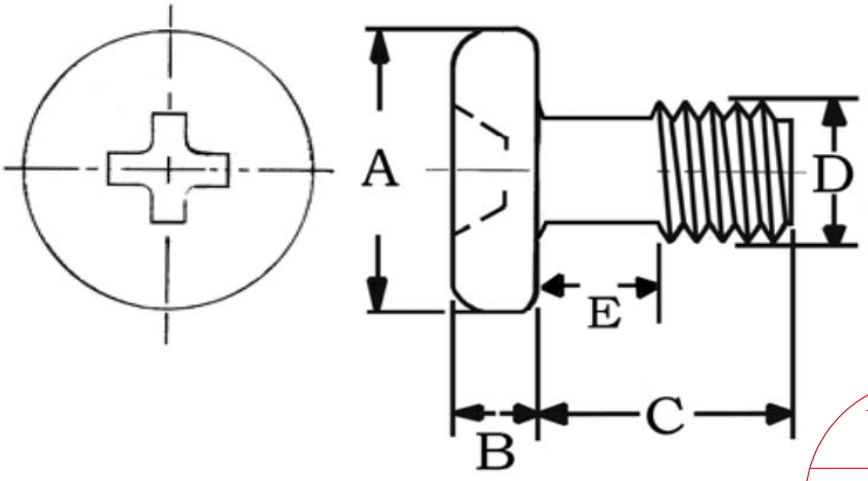

設計驗證
工程課
2024.02.07
發行
鈺緯科技開發股份有限公司

承認章
APPROVAL SIGN

戴興精密工業有限公司
承認書 發行章

備註
REMARK

ITEM	SPECIFICATION	1	2	3	4	5	JUDGE OK	JUDGE NG	量測儀器 CHECKING METHOD
A	7.0~6.5	6.84	6.83	6.85	6.85	6.83	◯		游表卡尺
B	2.75~2.45	2.61	2.61	2.6	2.6	2.61	◯		游表卡尺
C	10.0~9.5	9.89	9.9	9.88	9.91	9.9	◯		游表卡尺
D	3.97~3.84	3.94	3.94	3.93	3.94	3.94	◯		分厘卡
E	6.0~5.5	5.95	5.94	5.95	5.96	5.95	◯		游表卡尺
F									
G									
十字沖	2號	2號	2號	2號	2號	2號	◯		十字針規
PITCH	0.7	0.7	0.7	0.7	0.7	0.7	◯		投影機

核對 CHECKED	品管核對 AMPQ CHECKED	主辦 PREPARED
戴文浩	戴滙徵	張愛金

品質證明書
TEST CERTIFICATE

中國鋼鐵股份有限公司
CHINA STEEL CORPORATION
中華民國高雄市小港區中鋼路1號
1 CHUNG KANG ROAD HSIAO KANG, KAOHSIUNG 81223
TAIWAN, REPUBLIC OF CHINA
TEL: (07) 802-1111 FAX: (07) 802-2511, (07) 801-9427
E-mail: t21lmae@mail.csc.com.tw

B0135-01 COMPANY REGISTRATION NUMBER: 30414175 0479

客戶名稱 CUSTOMER	大中鋼鐵股份有限公司 TAH CHUNG STEEL CORP.	產品名稱 PRODUCT	ROD-CARBON STEEL		
		發票號碼 INVOICE NO.	NG32465446	證明書編號 CERTIFICATE NO.	120607B0135
規格名稱 SPEC.	SAE 1022, AL-KILLED (CQ) In Accordance with EN10204 3.1	客戶編號 CUSTOMER NO.	57001161	中鋼訂單編號 CSC ORDER NO.	JW6576A
		交運日期 SHIPPING DATE	JUN. 06, 2023	證明書日期 T/C ISSUE DATE	JUN. 07, 2023
檢驗 INSP.	CSC MILL INSPECTION T/C 01	客戶訂單編號 CUST ORDER NO.			

項目 ITEM NO.	產品序號 SEQ. NO.	尺寸 DIMENSIONS 直徑/厚度 DIA/THICK mm	寬度 WIDTH	長度 LENGTH mm	數量 QTY	質量 MASS kg	爐號 HEAT
001	V8562 02	5.50		COIL	1	2,233	2L256
	V8562 03	"		"	4	8,978	1A932
	V8562 04	"		"	5	10,987	1A919
			TOTAL:		10	22,198	

化學成分 CHEMICAL COMPOSITION %

C	Mn	P	S	Si	Cu	Ni	Cr	Al	B	Mo	N	Nb	Ti	V
2 X10	2 X10	3 X10		2 X10				3 X10	4 X10	2 X10	4 X10	3 X10	3 X10	2 X10
20	79	18	5	4	1	1	2	41	1	Tr	Tr	Tr	1	Tr
20	80	24	10	6	Tr	1	1	36	1	Tr	Tr	Tr	1	Tr
22	80	15	7	6	Tr	1	2	47	1	Tr	Tr	Tr	1	Tr

備註 REMARKS

Al =TOTAL Al

註釋 NOTES

Tr: TRACE ELEMENT (Si. Cu. Ni. Cr. Mo<0.02% ; Nb. Ti. V<0.008% ; OTHER ALSO CONFORM SPEC.)

SURVEYED BY

茲證明本表所列產品，均依材料規格製造及試驗，並符合規格之要求。
WE HEREBY CERTIFY THAT MATERIAL DESCRIBED HEREIN HAS BEEN MANUFACTURED AND TESTED WITH SATISFACTORY RESULTS IN ACCORDANCE WITH THE REQUIREMENT OF THE ABOVE MATERIAL SPECIFICATION AND THE TEST CERTIFICATE COMFORMS TO TYPE 3.1 OF TABLE A (ANNEX A) OF EN10204-2004.

Shon-Chin Hsieng
冶金技術處處長
GENERAL MANAGER, METALLURGICAL DEPARTMENT

有效性未知
For Question Please Contact with SGS www.sgs.com.tw

測試報告
Test Report

號碼(No.): ETR23601906　　日期(Date): 15-Jun-2023　　

富庶企業有限公司 (FU SU ENTERPRISE LIMITED COMPANY)
富笙電鍍工廠
新北市新莊區化成路363巷17號 (NO. 17, LANE 363, HUACHENG RD., SINJHUANG DISTRICT, NEW TAIPEI CITY 242, TAIWAN (R. O. C.))
新北市新莊區化成路349巷22號

以下測試樣品係由申請廠商所提供及確認 (The following sample(s) was/were submitted and identified by the applicant as)：

送樣廠商(Sample Submitted By)　：　富庶企業有限公司 (FU SU ENTERPRISE LIMITED COMPANY)
樣品名稱(Sample Name)　：　鍍鎳藥劑 (Ni)

==========

收件日(Sample Receiving Date)　：　12-Jun-2023
測試期間(Testing Period)　：　12-Jun-2023 to 15-Jun-2023

測試需求(Test Requested)　：
(1) 依據客戶指定，參考RoHS 2011/65/EU Annex II及其修訂指令(EU) 2015/863測試鎘、鉛、汞、六價鉻、多溴聯苯、多溴聯苯醚, DBP, BBP, DEHP, DIBP。 (As specified by client, with reference to RoHS 2011/65/EU Annex II and amending Directive (EU) 2015/863 to determine Cadmium, Lead, Mercury, Cr(VI), PBBs, PBDEs, DBP, BBP, DEHP, DIBP contents in the submitted sample(s).)
(2) 其他測試項目請見下一頁。 (Please refer to next pages for the other item(s).)

測試結果(Test Results)　：　請參閱下一頁 (Please refer to following pages.)

結　論(Conclusion)　：
(1) 根據客戶所提供的樣品，其鎘、鉛、汞、六價鉻、多溴聯苯、多溴聯苯醚, DBP, BBP, DEHP, DIBP的測試結果符合RoHS 2011/65/EU Annex II暨其修訂指令(EU) 2015/863之限值要求。 (Based on the performed tests on submitted sample(s), the test results of Cadmium, Lead, Mercury, Cr(VI), PBBs, PBDEs, DBP, BBP, DEHP, DIBP comply with the limits as set by RoHS Directive (EU) 2015/863 amending Annex II to Directive 2011/65/EU.)

Troy Chang / Department Manager
Signed for and on behalf of
SGS TAIWAN LTD.
Chemical Laboratory - Taipei

CHECK REPORT
PIN CODE: B8A88784

This document is issued by the Company subject to its General Conditions of Service printed overleaf, available on request or accessible at https://www.sgs.com.tw/terms-of-service and, for electronic format documents, subject to Terms and Conditions for Electronic Documents at https://www.sgs.com.tw/terms-of-service. Attention is drawn to the limitation of liability, indemnification and jurisdiction issues defined therein. Any holder of this document is advised that information contained hereon reflects the Company's findings at the time of its intervention only and within the limits of client's instruction, if any. The Company's sole responsibility is to its Client and this document does not exonerate parties to a transaction from exercising all their rights and obligations under the transaction documents. This document cannot be reproduced, except in full, without prior written approval of the Company. Any unauthorized alteration, forgery or falsification of the content or appearance of this document is unlawful and offenders may be prosecuted to the fullest extent of the law. Unless otherwise stated the results shown in this test report refer only to the sample(s) tested.

測試報告
Test Report

富庶企業有限公司 (FU SU ENTERPRISE LIMITED COMPANY)
富笙電鍍工廠
新北市新莊區化成路363巷17號 (NO. 17, LANE 363, HUACHENG RD., SINJHUANG DISTRICT, NEW TAIPEI CITY 242, TAIWAN (R. O. C.))
新北市新莊區化成路349巷22號

測試部位敘述 (Test Part Description)

No.1 : 綠色液體 (GREEN LIQUID)

測試結果 (Test Results)

測試項目 (Test Items)	測試方法 (Method)	單位 (Unit)	MDL	結果 (Result)	限值 (Limit)
				No.1	
鎘 (Cd) (Cadmium (Cd))	參考IEC 62321-5: 2013，以感應耦合電漿發射光譜儀分析。(With reference to IEC 62321-5: 2013, analysis was performed by ICP-OES.)	mg/kg	2	n.d.	100
鉛 (Pb) (Lead (Pb))		mg/kg	2	n.d.	1000
汞 (Hg) (Mercury (Hg))	參考IEC 62321-4: 2013+ AMD1: 2017，以感應耦合電漿發射光譜儀分析。(With reference to IEC 62321-4: 2013+ AMD1: 2017, analysis was performed by ICP-OES.)	mg/kg	2	n.d.	1000
六價鉻 Cr(VI) (Hexavalent Chromium Cr(VI))	參考IEC 62321-7-2: 2017，以紫外光-可見光分光光度計分析。(With reference to IEC 62321-7-2: 2017, analysis was performed by UV-VIS.)	mg/kg	8	n.d.	1000
一溴聯苯 (Monobromobiphenyl)	參考IEC 62321-6: 2015，以氣相層析儀/質譜儀分析。(With reference to IEC 62321-6: 2015, analysis was performed by GC/MS.)	mg/kg	5	n.d.	-
二溴聯苯 (Dibromobiphenyl)		mg/kg	5	n.d.	-
三溴聯苯 (Tribromobiphenyl)		mg/kg	5	n.d.	-
四溴聯苯 (Tetrabromobiphenyl)		mg/kg	5	n.d.	-
五溴聯苯 (Pentabromobiphenyl)		mg/kg	5	n.d.	-
六溴聯苯 (Hexabromobiphenyl)		mg/kg	5	n.d.	-
七溴聯苯 (Heptabromobiphenyl)		mg/kg	5	n.d.	-
八溴聯苯 (Octabromobiphenyl)		mg/kg	5	n.d.	-
九溴聯苯 (Nonabromobiphenyl)		mg/kg	5	n.d.	-
十溴聯苯 (Decabromobiphenyl)		mg/kg	5	n.d.	-
多溴聯苯總和 (Sum of PBBs)		mg/kg	-	n.d.	1000

This document is issued by the Company subject to its General Conditions of Service printed overleaf, available on request or accessible at https://www.sgs.com.tw/terms-of-service and, for electronic format documents, subject to Terms and Conditions for Electronic Documents at https://www.sgs.com.tw/terms-of-service. Attention is drawn to the limitation of liability, indemnification and jurisdiction issues defined therein. Any holder of this document is advised that information contained hereon reflects the Company's findings at the time of its intervention only and within the limits of client's instruction, if any. The Company's sole responsibility is to its Client and this document does not exonerate parties to a transaction from exercising all their rights and obligations under the transaction documents. This document cannot be reproduced, except in full, without prior written approval of the Company. Any unauthorized alteration, forgery or falsification of the content or appearance of this document is unlawful and offenders may be prosecuted to the fullest extent of the law. Unless otherwise stated the results shown in this test report refer only to the sample(s) tested.

測試報告
Test Report

富庶企業有限公司 (FU SU ENTERPRISE LIMITED COMPANY)
富笙電鍍工廠
新北市新莊區化成路363巷17號 (NO. 17, LANE 363, HUACHENG RD., SINJHUANG DISTRICT, NEW TAIPEI CITY 242, TAIWAN (R. O. C.))
新北市新莊區化成路349巷22號

測試項目 (Test Items)	測試方法 (Method)	單位 (Unit)	MDL	結果 (Result) No.1	限值 (Limit)
一溴聯苯醚 (Monobromodiphenyl ether)	參考IEC 62321-6: 2015，以氣相層析儀/質譜儀分析。(With reference to IEC 62321-6: 2015, analysis was performed by GC/MS.)	mg/kg	5	n.d.	-
二溴聯苯醚 (Dibromodiphenyl ether)		mg/kg	5	n.d.	-
三溴聯苯醚 (Tribromodiphenyl ether)		mg/kg	5	n.d.	-
四溴聯苯醚 (Tetrabromodiphenyl ether)		mg/kg	5	n.d.	-
五溴聯苯醚 (Pentabromodiphenyl ether)		mg/kg	5	n.d.	-
六溴聯苯醚 (Hexabromodiphenyl ether)		mg/kg	5	n.d.	-
七溴聯苯醚 (Heptabromodiphenyl ether)		mg/kg	5	n.d.	-
八溴聯苯醚 (Octabromodiphenyl ether)		mg/kg	5	n.d.	-
九溴聯苯醚 (Nonabromodiphenyl ether)		mg/kg	5	n.d.	-
十溴聯苯醚 (Decabromodiphenyl ether)		mg/kg	5	n.d.	-
多溴聯苯醚總和 (Sum of PBDEs)		mg/kg	-	n.d.	1000
鄰苯二甲酸丁苯甲酯 (BBP) (Butyl benzyl phthalate (BBP))	參考IEC 62321-8: 2017，以氣相層析儀/質譜儀分析。(With reference to IEC 62321-8: 2017, analysis was performed by GC/MS.)	mg/kg	50	n.d.	1000
鄰苯二甲酸二丁酯 (DBP) (Dibutyl phthalate (DBP))		mg/kg	50	n.d.	1000
鄰苯二甲酸二(2-乙基己基)酯 (DEHP) (Di-(2-ethylhexyl) phthalate (DEHP))		mg/kg	50	n.d.	1000
鄰苯二甲酸二異丁酯 (DIBP) (Diisobutyl phthalate (DIBP))		mg/kg	50	n.d.	1000
全氟辛烷磺酸及其鹽類 (PFOS and its salts) (CAS No.: 1763-23-1 and its salts)	參考CEN/TS 15968: 2010，以液相層析串聯質譜儀分析。(With reference to CEN/TS 15968: 2010, analysis was performed by LC/MS/MS.)	mg/kg	0.01	n.d.	-
全氟辛酸及其鹽類 (PFOA and its salts) (CAS No.: 335-67-1 and its salts)		mg/kg	0.01	n.d.	-

This document is issued by the Company subject to its General Conditions of Service printed overleaf, available on request or accessible at https://www.sgs.com.tw/terms-of-service and, for electronic format documents, subject to Terms and Conditions for Electronic Documents at https://www.sgs.com.tw/terms-of-service. Attention is drawn to the limitation of liability, indemnification and jurisdiction issues defined therein. Any holder of this document is advised that information contained hereon reflects the Company's findings at the time of its intervention only and within the limits of client's instruction, if any. The Company's sole responsibility is to its Client and this document does not exonerate parties to a transaction from exercising all their rights and obligations under the transaction documents. This document cannot be reproduced, except in full, without prior written approval of the Company. Any unauthorized alteration, forgery or falsification of the content or appearance of this document is unlawful and offenders may be prosecuted to the fullest extent of the law. Unless otherwise stated the results shown in this test report refer only to the sample(s) tested.

富庶企業有限公司 (FU SU ENTERPRISE LIMITED COMPANY)
富笙電鍍工廠
新北市新莊區化成路363巷17號 (NO. 17, LANE 363, HUACHENG RD., SINJHUANG DISTRICT, NEW TAIPEI CITY 242, TAIWAN (R. O. C.))
新北市新莊區化成路349巷22號

備註(Note)：

1. mg/kg = ppm；0.1wt% = 0.1% = 1000ppm
2. MDL = Method Detection Limit (方法偵測極限值)
3. n.d. = Not Detected (未檢出)；小於MDL / Less than MDL
4. "-" = Not Regulated (無規格值)
5. 全氟辛烷磺酸及其鹽類包含等物質 (PFOS and its salts including) :
   CAS No.: 1763-23-1, 2795-39-3, 29457-72-5, 29081-56-9, 70225-14-8, 56773-42-3, 251099-16-8, 307-35-7, 91036-71-4, 4021-47-0 and others.
6. 全氟辛酸及其鹽類包含等物質 (PFOA and its salts including) :
   CAS No.: 335-67-1, 335-95-5, 2395-00-8, 335-93-3, 335-66-0, 3825-26-1 and others.
7. 除非另有說明，參照ILAC-G8:09/2019，採用簡單二元(w=0)允收規則進行符合性判定；根據此規則，符合性結果之判定係以測試結果與限值做比較。(Unless otherwise stated , the decision rule for conformity reporting is based on Binary Statement for Simple Acceptance Rule (w=0) stated in ILAC-G8:09/2019. According to this rule, the judgement of conformity is based on the comparing test results with limits.)

This document is issued by the Company subject to its General Conditions of Service printed overleaf, available on request or accessible at https://www.sgs.com.tw/terms-of-service and, for electronic format documents, subject to Terms and Conditions for Electronic Documents at https://www.sgs.com.tw/terms-of-service. Attention is drawn to the limitation of liability, indemnification and jurisdiction issues defined therein. Any holder of this document is advised that information contained hereon reflects the Company's findings at the time of its intervention only and within the limits of client's instruction, if any. The Company's sole responsibility is to its Client and this document does not exonerate parties to a transaction from exercising all their rights and obligations under the transaction documents. This document cannot be reproduced, except in full, without prior written approval of the Company. Any unauthorized alteration, forgery or falsification of the content or appearance of this document is unlawful and offenders may be prosecuted to the fullest extent of the law. Unless otherwise stated the results shown in this test report refer only to the sample(s) tested.

測試報告
Test Report

富庶企業有限公司 (FU SU ENTERPRISE LIMITED COMPANY)
富笙電鍍工廠
新北市新莊區化成路363巷17號 (NO. 17, LANE 363, HUACHENG RD., SINJHUANG DISTRICT, NEW TAIPEI CITY 242, TAIWAN (R. O. C.))
新北市新莊區化成路349巷22號

重金屬流程圖 / Analytical flow chart of heavy metal

根據以下的流程圖之條件，樣品已完全溶解。（六價鉻測試方法除外）

These samples were dissolved totally by pre-conditioning method according to below flow chart.
（Cr^{6+} test method excluded）

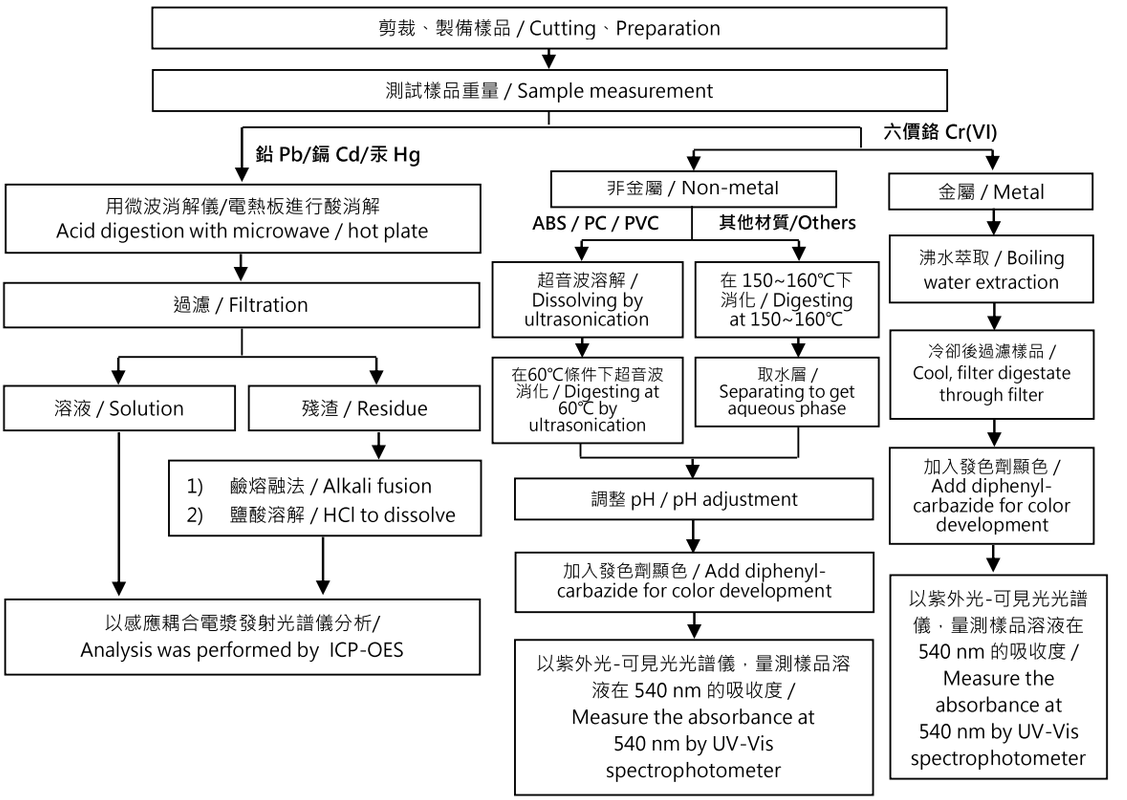

This document is issued by the Company subject to its General Conditions of Service printed overleaf, available on request or accessible at https://www.sgs.com.tw/terms-of-service and, for electronic format documents, subject to Terms and Conditions for Electronic Documents at https://www.sgs.com.tw/terms-of-service. Attention is drawn to the limitation of liability, indemnification and jurisdiction issues defined therein. Any holder of this document is advised that information contained hereon reflects the Company's findings at the time of its intervention only and within the limits of client's instruction, if any. The Company's sole responsibility is to its Client and this document does not exonerate parties to a transaction from exercising all their rights and obligations under the transaction documents. This document cannot be reproduced, except in full, without prior written approval of the Company. Any unauthorized alteration, forgery or falsification of the content or appearance of this document is unlawful and offenders may be prosecuted to the fullest extent of the law. Unless otherwise stated the results shown in this test report refer only to the sample(s) tested.

富庶企業有限公司 (FU SU ENTERPRISE LIMITED COMPANY)
富笙電鍍工廠
新北市新莊區化成路363巷17號 (NO. 17, LANE 363, HUACHENG RD., SINJHUANG DISTRICT, NEW TAIPEI CITY 242, TAIWAN (R. O. C.))
新北市新莊區化成路349巷22號

多溴聯苯/多溴聯苯醚分析流程圖 / Analytical flow chart - PBBs/PBDEs

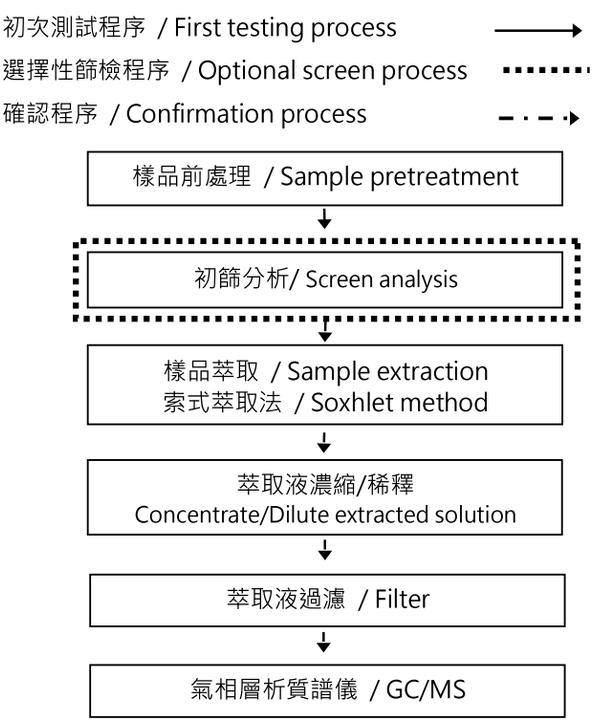

This document is issued by the Company subject to its General Conditions of Service printed overleaf, available on request or accessible at https://www.sgs.com.tw/terms-of-service and, for electronic format documents, subject to Terms and Conditions for Electronic Documents at https://www.sgs.com.tw/terms-of-service. Attention is drawn to the limitation of liability, indemnification and jurisdiction issues defined therein. Any holder of this document is advised that information contained hereon reflects the Company's findings at the time of its intervention only and within the limits of client's instruction, if any. The Company's sole responsibility is to its Client and this document does not exonerate parties to a transaction from exercising all their rights and obligations under the transaction documents. This document cannot be reproduced, except in full, without prior written approval of the Company. Any unauthorized alteration, forgery or falsification of the content or appearance of this document is unlawful and offenders may be prosecuted to the fullest extent of the law. Unless otherwise stated the results shown in this test report refer only to the sample(s) tested.

富庶企業有限公司 (FU SU ENTERPRISE LIMITED COMPANY)
富笙電鍍工廠
新北市新莊區化成路363巷17號 (NO. 17, LANE 363, HUACHENG RD., SINJHUANG DISTRICT, NEW TAIPEI CITY 242, TAIWAN (R. O. C.))
新北市新莊區化成路349巷22號

可塑劑分析流程圖 / Analytical flow chart - Phthalate

【測試方法/Test method: IEC 62321-8】

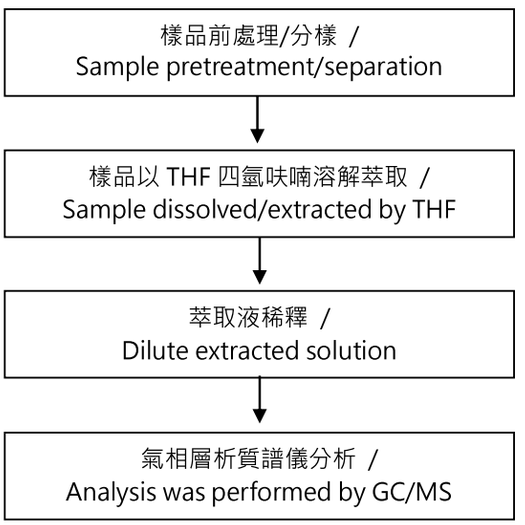

This document is issued by the Company subject to its General Conditions of Service printed overleaf, available on request or accessible at https://www.sgs.com.tw/terms-of-service and, for electronic format documents, subject to Terms and Conditions for Electronic Documents at https://www.sgs.com.tw/terms-of-service. Attention is drawn to the limitation of liability, indemnification and jurisdiction issues defined therein. Any holder of this document is advised that information contained hereon reflects the Company's findings at the time of its intervention only and within the limits of client's instruction, if any. The Company's sole responsibility is to its Client and this document does not exonerate parties to a transaction from exercising all their rights and obligations under the transaction documents. This document cannot be reproduced, except in full, without prior written approval of the Company. Any unauthorized alteration, forgery or falsification of the content or appearance of this document is unlawful and offenders may be prosecuted to the fullest extent of the law. Unless otherwise stated the results shown in this test report refer only to the sample(s) tested.

富庶企業有限公司 (FU SU ENTERPRISE LIMITED COMPANY)
富笙電鍍工廠
新北市新莊區化成路363巷17號 (NO. 17, LANE 363, HUACHENG RD., SINJHUANG DISTRICT, NEW TAIPEI CITY 242, TAIWAN (R. O. C.))
新北市新莊區化成路349巷22號

全氟化合物(包含全氟辛酸/全氟辛烷磺酸/其相關化合物等等)分析流程圖 / Analytical flow chart – PFAS (including PFOA/PFOS/its related compound, etc.)

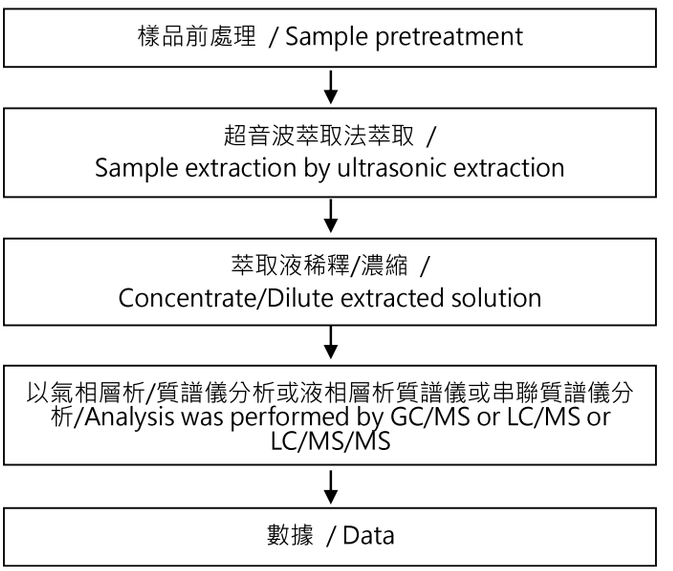

This document is issued by the Company subject to its General Conditions of Service printed overleaf, available on request or accessible at https://www.sgs.com.tw/terms-of-service and, for electronic format documents, subject to Terms and Conditions for Electronic Documents at https://www.sgs.com.tw/terms-of-service. Attention is drawn to the limitation of liability, indemnification and jurisdiction issues defined therein. Any holder of this document is advised that information contained hereon reflects the Company's findings at the time of its intervention only and within the limits of client's instruction, if any. The Company's sole responsibility is to its Client and this document does not exonerate parties to a transaction from exercising all their rights and obligations under the transaction documents. This document cannot be reproduced, except in full, without prior written approval of the Company. Any unauthorized alteration, forgery or falsification of the content or appearance of this document is unlawful and offenders may be prosecuted to the fullest extent of the law. Unless otherwise stated the results shown in this test report refer only to the sample(s) tested.

測試報告
Test Report

富庶企業有限公司 (FU SU ENTERPRISE LIMITED COMPANY)
富笙電鍍工廠
新北市新莊區化成路363巷17號 (NO. 17, LANE 363, HUACHENG RD., SINJHUANG DISTRICT, NEW TAIPEI CITY 242, TAIWAN (R. O. C.))
新北市新莊區化成路349巷22號

*** 照片中如有箭頭標示，則表示為實際檢測之樣品/部位. ***
(The tested sample / part is marked by an arrow if it's shown on the photo.)

ETR23601906



** 報告結尾 (End of Report) **

This document is issued by the Company subject to its General Conditions of Service printed overleaf, available on request or accessible at https://www.sgs.com.tw/terms-of-service and, for electronic format documents, subject to Terms and Conditions for Electronic Documents at https://www.sgs.com.tw/terms-of-service. Attention is drawn to the limitation of liability, indemnification and jurisdiction issues defined therein. Any holder of this document is advised that information contained hereon reflects the Company's findings at the time of its intervention only and within the limits of client's instruction, if any. The Company's sole responsibility is to its Client and this document does not exonerate parties to a transaction from exercising all their rights and obligations under the transaction documents. This document cannot be reproduced, except in full, without prior written approval of the Company. Any unauthorized alteration, forgery or falsification of the content or appearance of this document is unlawful and offenders may be prosecuted to the fullest extent of the law. Unless otherwise stated the results shown in this test report refer only to the sample(s) tested.