SK37-TR thru SK3B-TR

Surface Mount Schottky Rectifier

Reverse Voltage 70V to 100V Forward Current 3A

Features

- Schottky barrier diodes
- Low forward voltage drop
- High Tunction Temperature
- Moisture sensitivity: level 1, per J-STD-020
- Plastic package has Underwriters Laboratory Flammability Classification 94V-0
- Add suffix "E" for Halogen Free
- Halogen-free according to IEC 61249-2-21 definition

RoHS COMPLIANT



DO-214AB (SMC)

Typical Applications

For use in low voltage,high freqency inverters,free wheeling, and polarity protection application

Maximum Ratings (TA = 25 °C unless otherwise noted)

Parameter	Symbol	SK37 SK37E	SK38 SK38E	SK39 SK39E	SK3B SK3BE	Unit
Maximum repetitive peak reverse voltage	V_{RRM}	70	80	90	100	V
Maximum RMS voltage	V_{RMS}	42	56	63	70	V
Maximum DC blocking voltage	V_{DC}	70	80	90	100	V
Maximum average forward rectified current	$I_{F(AV)}$	3.0				A
Peak forward surge current 8.3 ms single half sine-wave superimposed on rated load	I_{FSM}	100				A
Operating junction and storage temperature range	T_J, T_{STG}	- 55 to + 150				°C

Electrical Characteristics (TA = 25 °C unless otherwise noted)

Parameter	Test Conditions	Symbol	SK37 SK37E	SK38 SK38E	SK39 SK39E	SK3B SK3BE	Unit
Maximum instantaneous forward voltage	I_F=3A, T_A=25℃	V_F	0.79				V
Maximum DC reverse current at rated DC blocking voltage	T_A=25℃	I_R	30				uA
	T_A=125℃		2000				
Typical junction capacitance	4.0 V, 1 MHz	C_J	100				pF

Thermal Characteristics

Parameter	Symbol	SK37 SK37E	SK38 SK38E	SK39 SK39E	SK3B SK3BE	Unit
Typical thermal resistance(1)	$R_{\theta JA}$	65				℃/W
	$R_{\theta JC}$	25				
	$R_{\theta JI}$	15				

Note1:Thermal resistance from junction to lead,mounted on PCB with 8.0×8.0mm copper pads

Ratings and Characteristics Curves

(TA = 25℃ unless otherwise noted)

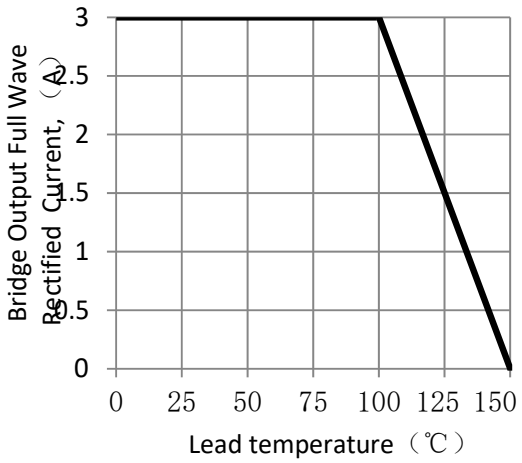

Figure 1.Forward Current Derating Curve

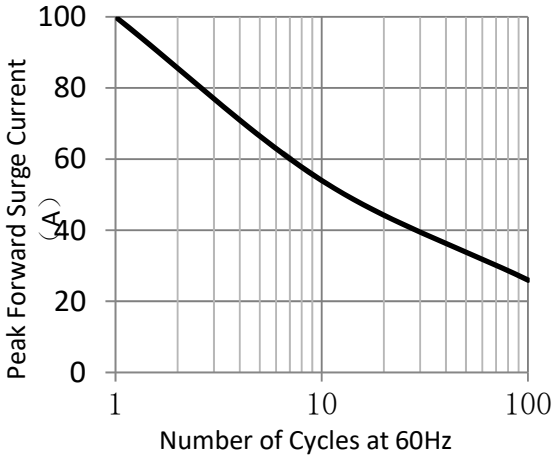

Figure 2.Maximum Non-Repetitive Peak Forward Surge Current

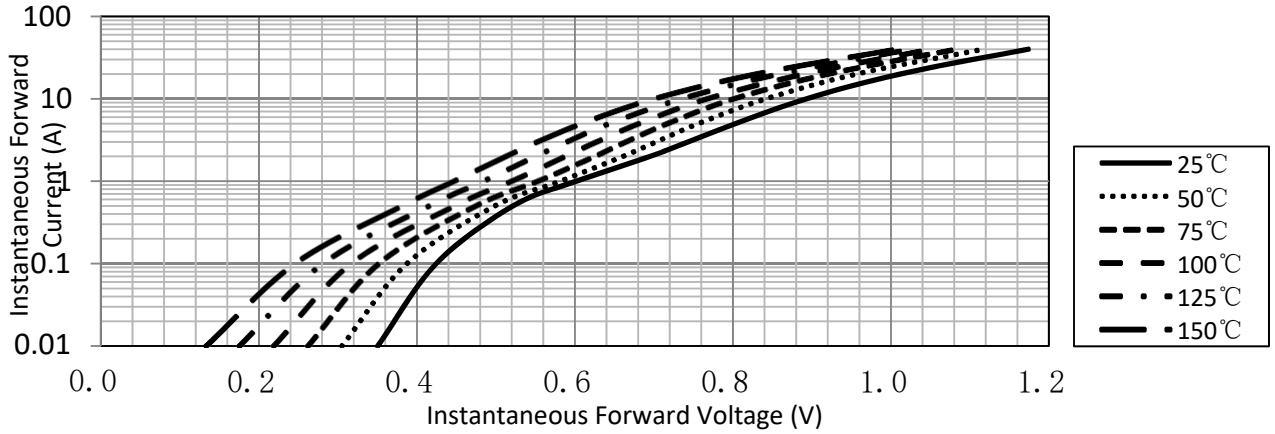

Figure 3. Typical Instantaneous Forward Characteristics

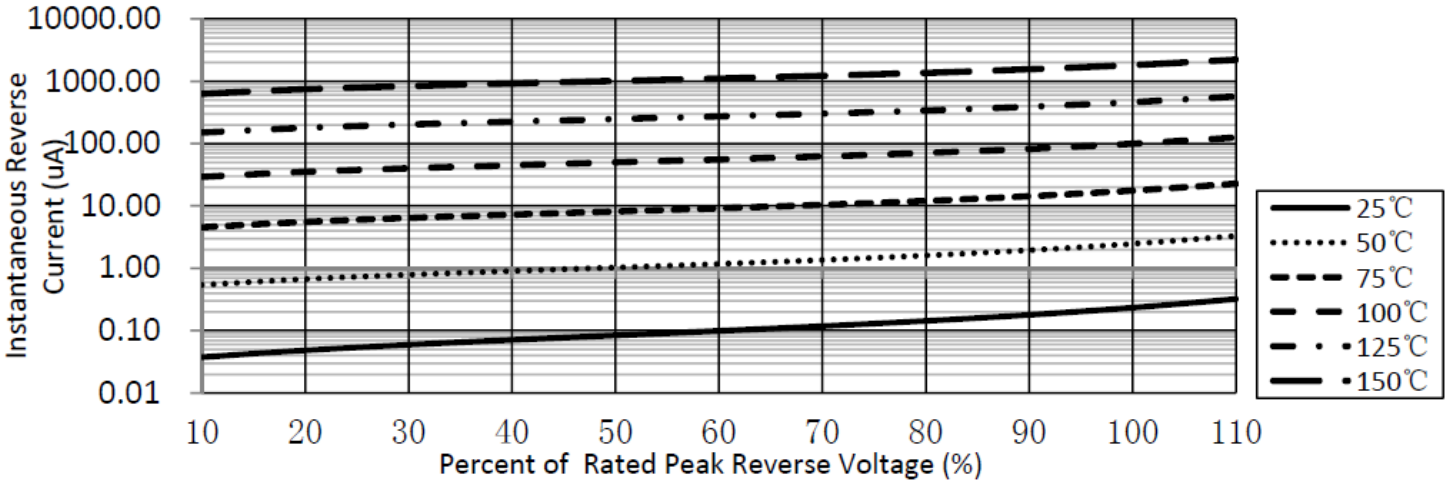

Figure 4. Typical Reverse Characteristics

Package Outline Dimensions

in inches (millimeters)

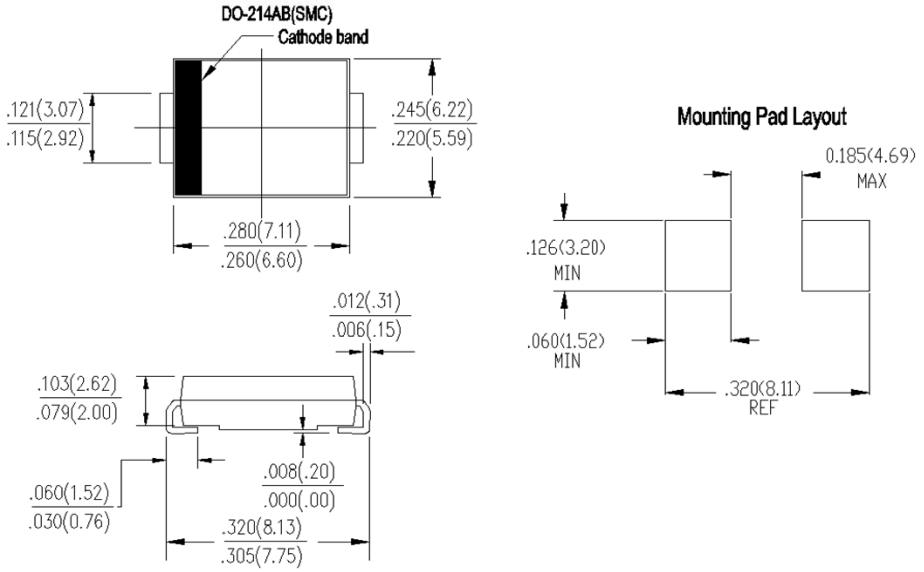

Packing Information

3000 pcs/Reel, 14 Reels/Box; 16mm Tape, 13" Reel

Tape & Reel Specification

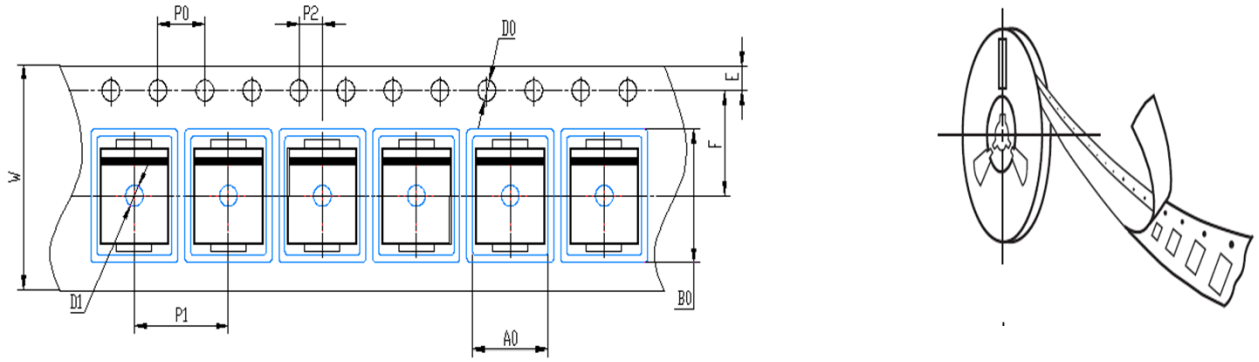

Symbo	SMC (mm)
W	16±0.2
E	1.75±0.1
F	7.5±0.05
D0	1.5±0.1
D1	1.50 +0.1/-0
P0	4.0±0.1
P1	8.0±0.1
P2	2.0±0.05
A0	6.22±0.1
B0	8.31±0.1

Soldering Parameters

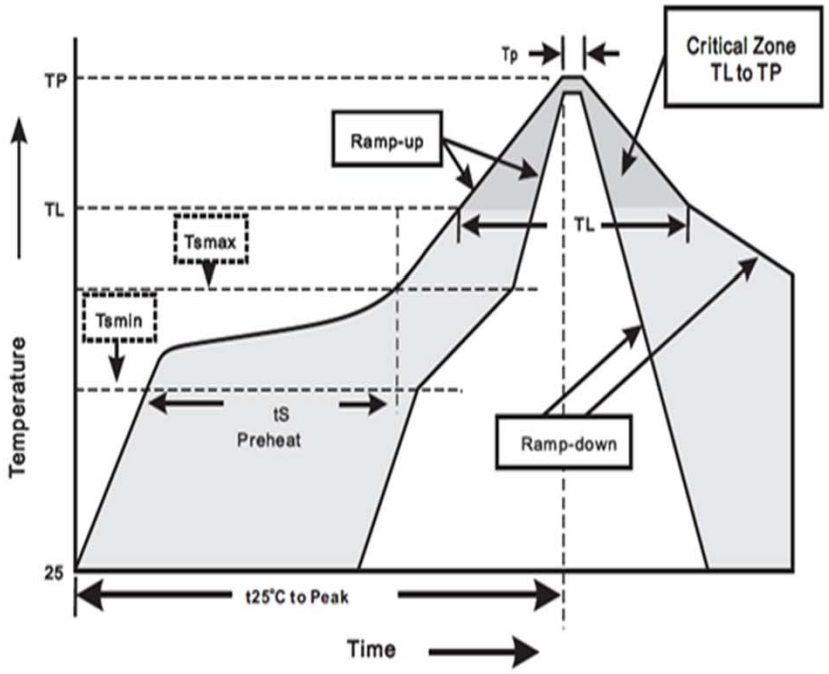

Reflow Soldering		Sn-Pb Eutectic Assembly	Pb-Free assembly
Pre Heat	- Temperature Min (Ts(min))	100°C	150°C
	- Temperature Max (Ts(max))	150°C	200°C
	- Time (min to max) (ts)	60 – 120 secs	60 – 180 secs
Average ramp up rate (Liquidus) Temp (TL) to peak		3°C/second max	3°C/second max
TS(max) to TL - Ramp-up Rate		3°C/second max	3°C/second max
Reflow	- Temperature (TL) (Liquidus)	183°C	217°C
	- Time (min to max) (ts)	60 – 150 seconds	60 – 150 seconds
Peak Temperature (TP)		240+0/-5 °C	240+0/-5°C
Time within 5°C of actual peak Temperature (tp)		10 –30 seconds	20 – 40 seconds
Ramp-down Rate		6°C/second max	6°C/second max
Time 25°C to peak Temperature (TP)		6 minutes Max.	8 minutes Max.
Do not exceed		260°C	260°C

Wave Soldering	
Peak Temperature :	260+0/-5°C
Dipping Time :	10 seconds
Soldering :	1 time

Disclaimers

These materials are intended as a reference to assist our customers in the selection of the Suzhou Good-Ark product best suited to the customer ' s application; they do not convey any license under any intellectual property rights, or any other rights, belonging to Suzhou Good-Ark Electronics Co., Ltd.or a third party.

Suzhou Good-Ark Electronics Co., Ltd. assumes no responsibility for any damage, or infringement of any third-party ' s rights, originating in the use of any product data, diagrams, charts, programs, algorithms, or circuit application examples contained in these materials.

All information contained in these materials, including product data, diagrams, charts, programs and algorithms represents information on products at the time of publication of these materials, and are subject to change by Suzhou Good-Ark Electronics Co., Ltd. without notice due to product improvements or other reasons. It is therefore recommended that customers contact Suzhou Good-Ark Electronics Co., Ltd. or an authorized Suzhou Good-Ark Electronics Co., Ltd. for the latest product information before purchasing a product listed herein. The information described here may contain technical inaccuracies or typographical errors. Suzhou Good-Ark Electronics Co., Ltd. assumes no responsibility for any damage, liability, or other loss rising from these inaccuracies or errors. Please also pay attention to information published by Suzhou Good-Ark Electronics Co., Ltd. by various means, including our website home page. (http://www.goodark.com)

When using any or all of the information contained in these materials, including product data, diagrams, charts, programs, and algorithms, Please be sure to evaluate all information as a total system before making a final decision on the applicability of the information and products. Suzhou Good-Ark Electronics Co., Ltd. assumes no responsibility for any damage, liability or other loss resulting from the information contained herein.

The prior written approval of Suzhou Good-Ark Electronics Co., Ltd. is necessary to reprint or reproduce in whole or in part these materials.

Please contact Suzhou Good-Ark Electronics Co., Ltd. or an authorized distributor for further details on these materials or the products contained herein.

SK37-TR thru SK3B-TR

Surface Mount Schottky Rectifier

Reverse Voltage 70V to 100V Forward Current 3A

Marking

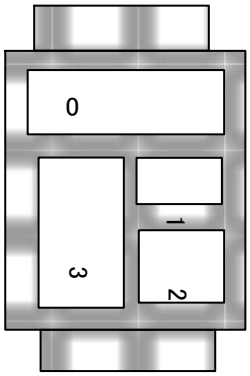

0:阴极线 **Cathode Band**

1:**GD loge:**

2:制造年月**DATE CODE H 7(Jul.2017)**

年　　月

3:品名 **Part Name SK3BE**

(Add suffix "E" for Halogen Free)

Annual Code

年份	2009	2010	2011	2012	2013	2014	2015	2016	2017	2018	2019	2020
代码	9	A	B	C	D	E	F	G	H	J	K	0

Monthly Code

月份	1 月	2 月	3 月	4 月	5 月	6 月	7 月	8 月	9 月	10 月	11 月	12 月
代码	1	2	3	4	5	6	7	8	9	O	N	D

SK37-TR thru SK3B-TR

Surface Mount Schottky Rectifier

Reverse Voltage 70V to 100V Forward Current 3A

Packing SPEC

1）Primary Packaging

Reel Packaging

Quantity 3Kpcs/reel

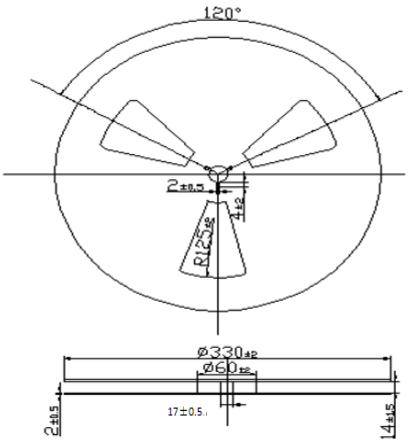

Inter Box Packaging (337mm×337mm×44mm)

Quantity 6Kpcs/box

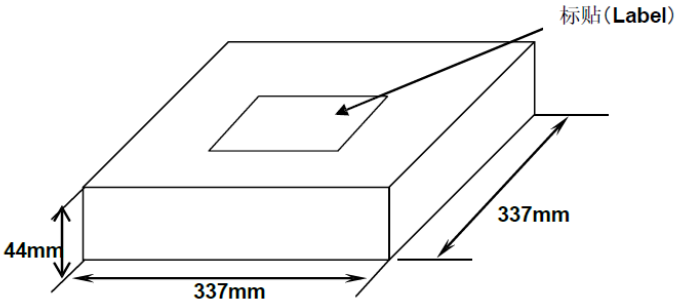

2) Secondary Packaging

Corrugated cardboard box (355mm × 355mm × 370mm)

Quantity 42K pcs/carton

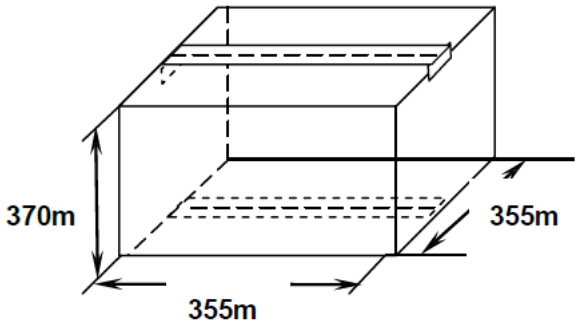

Description of Box Label

卷盘/内盒



标贴内容说明

CUSTOMER P/N：客户料号，如无为空

PART NO:我司产品品名

QUANTITY:实际数量

DATA CODE：包装周期码

LOT NO:年最后两位+车间订单号+顺序号四位

外箱

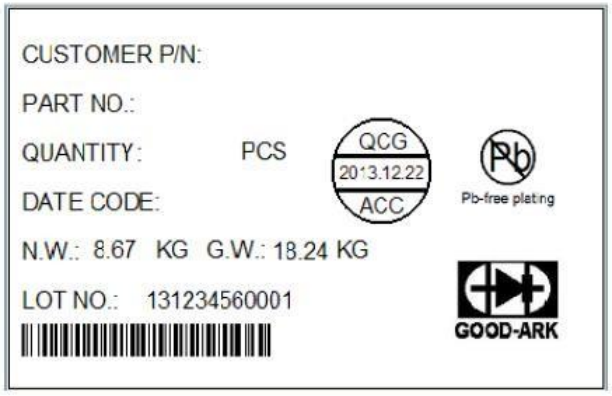

标贴内容说明

CUSTOMER P/N：客户料号，如无为空

PART NO:我司产品品名

QUANTITY:实际数量

DATA CODE：包装周期码

LOT NO:年最后两位+车间订单号+顺序号四位

N.W.:净重 G.W.：毛重