REV.	DATE	DESCRIPTION	BY	APVD
A	2024-03-05	ADD HOOK, DIMENSION UPDATED	Laslie	-

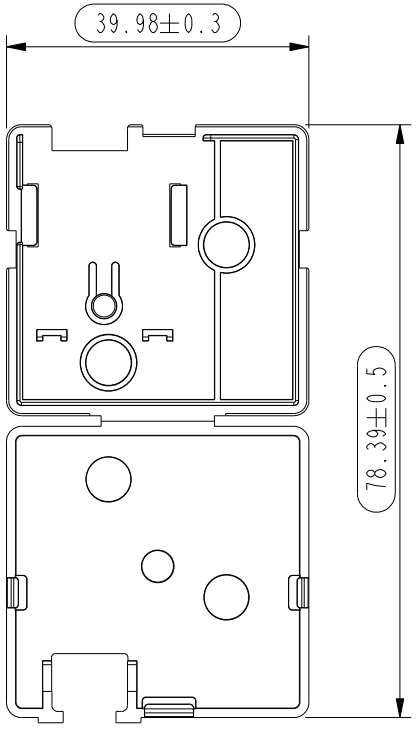

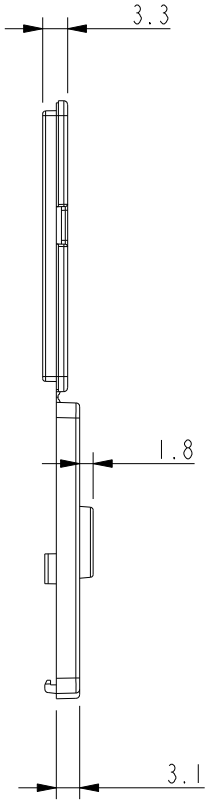

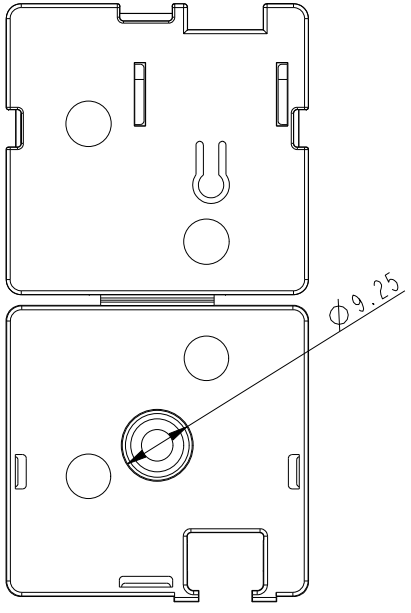

NOTES: UNLESS OTHERWISE SPECIFIED

1. Material: Nylon 66
   Material Color: black
2. Surface treatment: Texture,MT-11010
3. All unspecified draft angel to be max 0.5
4. All external surfaces without sink mark, knit mark and nicks Otherwise define on limit sample
5. Gate and ejector pin marks to be under flush by 0.2mm
6. Concentric center tolerances are ± 0.05 mm
7. All unspecified radius are 0.3mm
8. " ○ "Major dimension
9. Unspecified dimension tolerance reference tolerance table
10. Please refer to 3D file when dimensions can' t found in drawing
11. Need paint area, Please see approve sample or painting drawing

RANGE OF DIMENSION	TOLERANCE CLASS DESIGNATION f	V m	V c
UP TO 30	±0.10	±0.20	±0.50
ABOVE 30~120	±0.15	±0.30	±0.80
ABOVE 120~315	±0.20	±0.50	±1.20
ABOVE 315~1000	±0.30	±0.80	±2.00
ANGLE ±1° (±1.75/100)			

THIRD ANGLE PROJECTION

DSGD by	Jay Hsu	10-18-21	PART NAME: SENSOR COVER RUP2732CMI
CHK by			
APVD by	Laslie	10-18-21	PART NO.: 3MD562PA02A REV. 0
APVD NO.:		3D FILE NAME: SENSOR_COVER_ASSY_24	DIVA Laboratories ,Ltd.

UNITS:mm	SCALE: 1/1	SHEET: 2 OF 2	MODEL NO.:
MATERIAL:		TREATMENT:	