LI TAI ELECTRONIC ENTERPRISE CO.,LTD

CUSTOMER

Qisda

SPECIFICATION FOR APPROV AL

CUSTOMER PART NO: 1J.40243.051

LI TAI PART NO: CC-020943RP

DESCRIPTION: CHOKE COIL

DATE: 2023-06-15

TAIWAN □HEAD OFFICE：東力泰企業有限公司

2F-2, No.16, Jian Ba Road, Chang Ho Dist. , New Taipei City, 23511 Taiwan

新北市中和區建八路 16 號 2 樓之 2

TEL: (02) 8226-3838 FAX: (02) 8226-5522

CHINA □FUQING PLANT：福清景翔電子配件有限公司

Rongqiao Economic and Technological Development Zone, Fuyu Rd., Fuqing, Fujian, China

福建省福清市融僑經濟技術開發區福玉路

TEL: 86-591-85367150 FAX: 86-591-85381525

□SHENZHEN PLANT：力泰電子深圳有限公司

No.88 Building, No.5 Industrial Area, Ma-Shan-Tou Community, Gong-Ming Street, Guang-Ming New District, Shenzhen, Guangdong, 518106 China

廣東省深圳市光明新區公明辦事處馬山頭社區第五工業區第 88 棟

TEL: 86-755-27730621 FAX: 86-755-27730576

■SUZHOU PLANT：蘇州祥崴電子有限公司

1027-2 Sunwu Road, Xukou Town, WuZhong District, Suzhou, China

江蘇省蘇州市吳中區胥口鎮孫武路 1027-2 號

TEL: 86-512-66219182 FAX: 86-512-66219183

Customer	Qisda	Customer P/N	1J.40243.051	Spec Version	A3
Supplier	LI TAI	Maker P/N	CC-020943RP	Component Type	DRWW8x7

Form Version: 3.0

Transformer / Coil Specification

Customer	Qisda
Customer P/N	1J.40243.051
Core Type	DRWW8x7
Maker P/N	CC-020943RP
Create Date	2023-06-15
Spec Version	A3
Maker Factory Address	LI TAI ELECTRONIC ENTERPRISE CO LTD SUZHOU PLANT: 1027-2 SUNWU RD XUKOU TOWN WUZHONG DISTRICT SUZHOU JIANGSU CHINA 蘇州祥崴電子有限公司: 江蘇省蘇州市吳中區胥口鎮孫武路 1027-2 號 TEL:86-512-66219182 FAX:86-512-66210696

Customer	Qisda	Customer P/N	1J.40243.051	Spec Version	A3
Supplier	LI TAI	Maker P/N	CC-020943RP	Component Type	DRWW8x7

Form Version: 3.0

History

Version	Original	Change To	Date	Remark
A0	ISSUE		2016-02-23	
A1		增加成品圖 Current Rated	2016-03-10	
A2		Current Rated 變更為 2.5A	2016-03-24	
A3		CORE 廠家修改	2023-06-15	

Customer	Qisda	Customer P/N	1J.40243.051	Spec Version	A3
Supplier	LI TAI	Maker P/N	CC-020943RP	Component Type	DRWW8x7

Form Version: 3.0

- Content:
  - Configuration & Dimension
  - Bobbin Dimension
  - Winding Specification
  - Electrical Characteristics
  - Material List
  - Package Specification
  - Reliability Criteria
  - Qisda Check List

Customer	Qisda	Customer P/N	1J.40243.051	Spec Version	A3
Supplier	LI TAI	Maker P/N	CC-020943RP	Component Type	DRWW8x7

Form Version: 3.0

● Configuration & Dimension

(Should be including Top View、Front View、Bottom view、Side View、Pin Pad Drawing、Picture of Core Tapping &Other note)

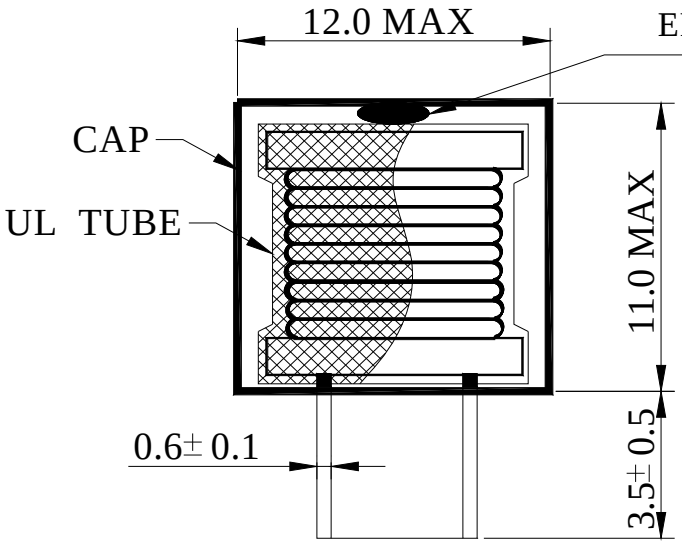

<FRONT VIEW>



<VIEW C>

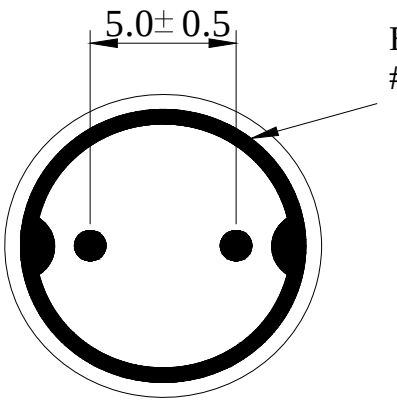

<BOTTOM VIEW>

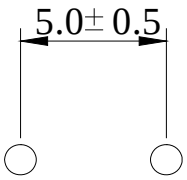

PIN PAD TOP VIEW

Customer	Qisda	Customer P/N	1J.40243.051	Spec Version	A3
Supplier	LI TAI	Maker P/N	CC-020943RP	Component Type	DRWW8x7

Form Version: 3.0

Note:

No.	Deacription	Remark
1	套磁帽前產品先套 UL TUBE	
2	套磁帽前,產品頂部點膠與磁帽接合固定,膠量不能超出成品底部	
3	成品須含浸	
4	WEIGHT is 3.8+/- 2 g	
5	Photo for Final sample	VIEW C

Customer	Qisda	Customer P/N	1J.40243.051	Spec Version	A3
Supplier	LI TAI	Maker P/N	CC-020943RP	Component Type	DRWW8x7

Form Version: 3.0

Core Dimension

UNIT:mm CP 0.6X16.5X16.5

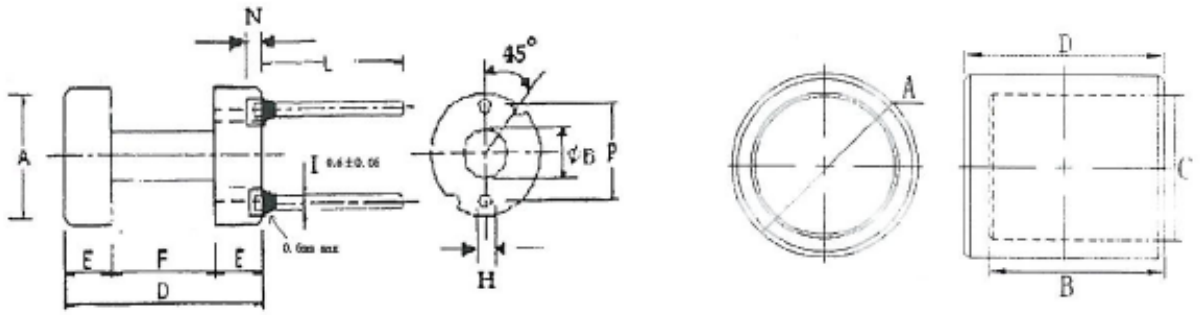

尺寸規格	DR:A	B	D	E	F	P	P:A	B	C	D
	8.00 ±0.15	5.50 ±0.15	7.00 ±0.30	1.50 ±0.20	4.00 ±0.20	5.00 ±0.50	11.3 ±0.25	9.50 ±0.20	9.40 ±0.20	10.7 ±0.20

Customer	Qisda	Customer P/N	1J.40243.051	Spec Version	A3
Supplier	LI TAI	Maker P/N	CC-020943RP	Component Type	DRWW8x7

Form Version: 3.0

● Winding Specification

➔ Winding List:

No	Winding No.	Terminal	Wire	Turns	Winding Rule
1	N1	S---F	2 UEW 0.37 ϕ x1c	23.5	REF

➔ Schematic:

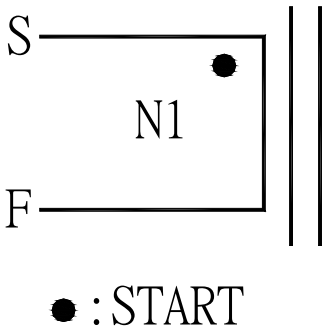

● : START

Customer	Qisda	Customer P/N	1J.40243.051	Spec Version	A3
Supplier	LI TAI	Maker P/N	CC-020943RP	Component Type	DRWW8x7

Form Version: 3.0

● Electrical Characteristics

Item	Test Terminal	Specification	Test Instrument
Inductance	L(S---F)	47uH±10%	WAYKE KERR 3260B LCR METER/HP4129 @10KHz, 1V
Q Value (min)	Q(S---F)	15MIN	
DC BIAS 2.5A	L(0A)*90% MIN		
D.C. Resistance @25℃	R(S---F)	120mΩ MAX	CHEN HWA 502 OHM METER @25℃
Hi-Pot	COIL TO CORE	AC 1000V/1mA/3SEC	ZENTECH 9072A
Insulation Resistance	COIL TO CORE	DC500V/100MΩ MIN	
Current Rated	2.5A		
Operation Temp. Range	-20℃ ~ +130℃		
Storage Temp. Range	-20℃ ~ +60℃		

Customer	Qisda	Customer P/N	1J.40243.051	Spec Version	A3
Supplier	LI TAI	Maker P/N	CC-020943RP	Component Type	DRWW8x7

Form Version: 3.0

➔ Insulation System

Company	Description	UL No.
LI TAI ELECTRONIC ENTERPRISE CO., LTD	CLASS 130(B) CIS.04	E258545

● Material List

	No	Sub Part	Supplier	Description	Type	Flame/ Temp.	UL No.
*	1	CORE	RUI YUAN ELECTRIC CO.,LTD	FERRITE CORE DRWW8×7 B:5.5 F:3.5 P:5.0 P11.3×10×9.4	S4A	N/A	N/A
	2	WIRE	PACIFIC	POLYURETHANE	UEWN/U (ANSI MW-28)	130℃	E201757
	3	TUBE CTI 150V Thk. 0.15(min.)	SHENZHEN WOER HEAT-SHRINKABLE MATERIAL	UL TUBE	RSFR-HPF (無紅磷)	125℃	E203950
	4	VARNISH	JOHN C	POLYESTER	BC-346A	200℃	E317427
	5	EPOXY	HUA CHUANG	BLACK HARD EPOXY	H907-HF	130℃	E304477
			HUA CHUANG	WHITE SOFT EPOXY	H907-HF-N	130℃	E304477
	6	PIN	WELL FORE	SOLDER 99.26% Sn 0.05% Ag 0.08% Cu,ECT	N/A	N/A	N/A
	7	TIN	SHI PIN	Lead Free Solder Sn98% Cu2%	N/A	N/A	N/A

* Safety concerned subparts.

Customer	Qisda	Customer P/N	1J.40243.051	Spec Version	A3
Supplier	LI TAI	Maker P/N	CC-020943RP	Component Type	DRWW8x7

Form Version: 3.0

Package Specification

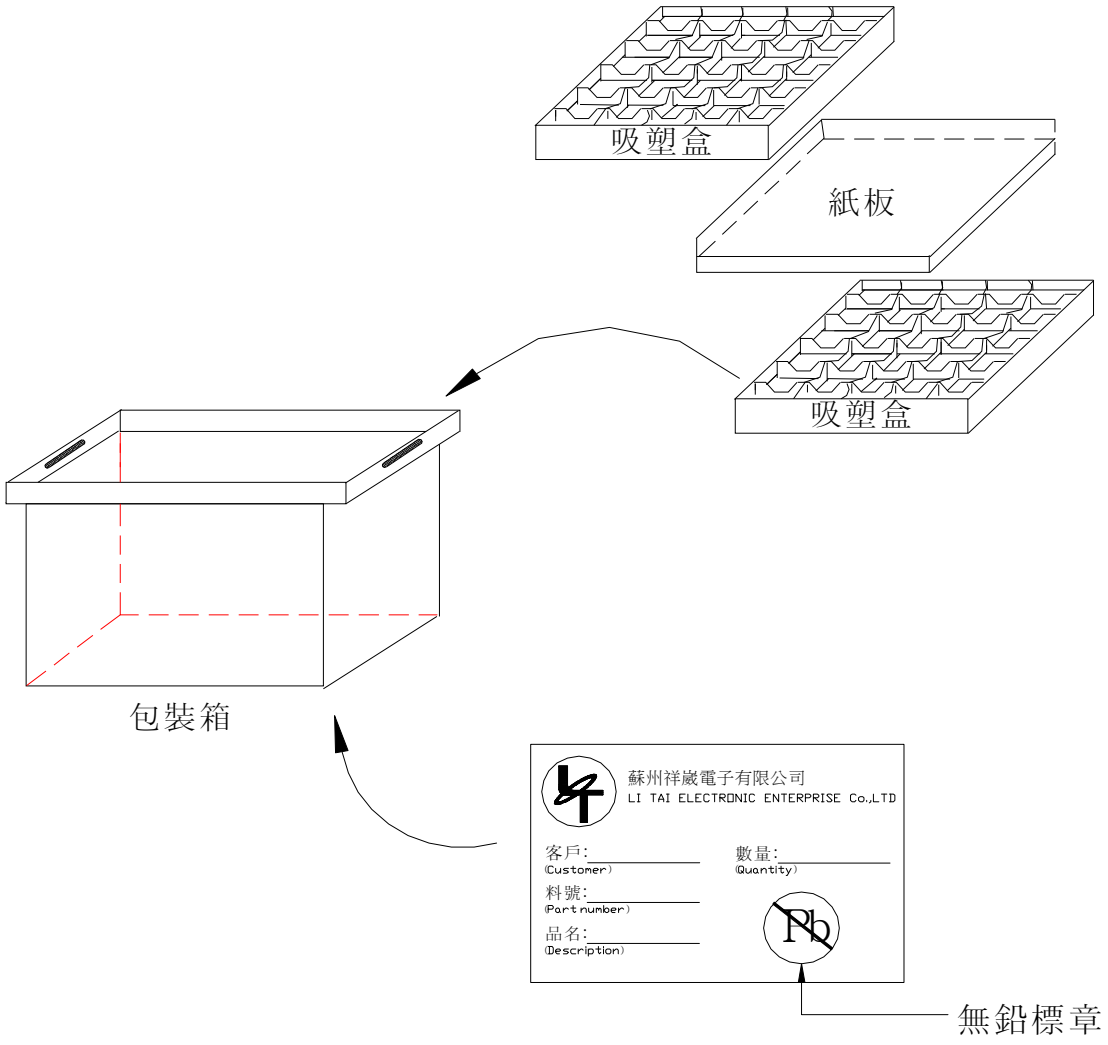

Customer	Qisda	Customer P/N	1J.40243.051	Spec Version	A3
Supplier	LI TAI	Maker P/N	CC-020943RP	Component Type	DRWW8x7

Form Version: 3.0

包裝箱外箱標籤說明：

A.Condition:

For the packing identification of standard shipment

B.Label specification:

Material : Copper plate

Dimension: 80*60 mm for SOT series

Back Glue: Acrylic Glue series

Color: Frame: White Character: Black

C. Bar Code Specification (Bar code printer is DATAMAX)

(1). Code: Regular Code 128(Auto)

(2). Parameter:

X Dimension: 9.8mil

Ratio: 300dpi(3 dots)

Height: 0.7cm.

(3).Character:

Type: Arial (For Bar code machine Datamax)

Right character size 12 (Packer, Pack Date, QC)

Pb character size 24

Qisda character size 20



D. Label Content:

(1). P/N: Part No.

(2). LOT NO.: Product Lot No.

(3). (Q)Quantity

(4). Product Date+Expire days: Assembly Date Code, Expire days

(5). (B): Customer Part No. Code,Li tai Code,D/C Code, Quantity

(6)ReellD: Li tai Code,Assembly Date Code, Manufacture Lot No.

(7) Pb : For Pb free package

(8) Qisda : Customer name

NOTE:（括弧內中文為解釋說明）

Customer	Qisda	Customer P/N	1J.40243.051	Spec Version	A3
Supplier	LI TAI	Maker P/N	CC-020943RP	Component Type	DRWW8x7

Form Version: 3.0

包裝盒嗲頭標籤說明：

A.Condition:

For the packing identification of shipping mark

B Label specification:

Material : Copper plate

Dimension: 20*60 mm for SOT series

Back Glue: Acrylic Glue series

Color: Frame: White Character: Black



C. Bar Code Specification

(1). Code: Regular Code 128(Auto)

(2). Parameter:

X Dimension: 9.8mil

Ratio: 300dpi(3 dots)

Height: 0.7cm.

D. Label Content:

客户料号：Customer Part No.

周期：D/C

数量：Quantity

包裝箱外箱 QC 標籤：

A.Condition:

For the packing identification of QC. mark

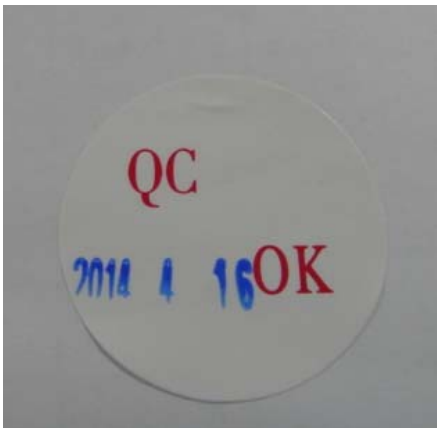

B Label specification:

Material : Copper plate

Dimension: Φ30.0mm series

Back Glue: Acrylic Glue series

Color: Frame: White Character: Red＆Blue

C Label Content:

QC OK：Quality Control Pass

Date：Assembly Date

Customer	Qisda	Customer P/N	1J.40243.051	Spec Version	A3
Supplier	LI TAI	Maker P/N	CC-020943RP	Component Type	DRWW8x7

Form Version: 3.0

● Reliability Criteria (Qisda Version :2.0)

Test item	Test condition (Test Method)	inspection criteria
高溫無負荷壽命測試 (Hi-temp unload life test)	Condition: 85±2°C Duration: 120 hours 96 Hrs (工厂例行性抽验)	1. 外觀：無腐蝕、裂痕、其他機械損傷線圈鐵芯裝配牢固 2. 電氣特性：在原 SPEC 要求之規格內
低溫無負荷壽命測試 (Low-temp unload life test)	Condition: -25℃ ± 2℃ Duration: 120 hours 96 Hrs (工厂例行性抽验)	1. 外觀：無腐蝕、裂痕、其他機械損傷線圈鐵芯裝配牢固 2. 電氣特性：在原 SPEC 要求之規格內
耐濕性無負荷試驗 (Humidity unload test)	Condition: 65℃ ± 2℃ Humidity: 90 to 95% RH Duration: 120 hours	1. 外觀：無腐蝕、裂痕、其他機械損傷線圈鐵芯裝配牢固 2. 電氣特性：在原 SPEC 要求之規格內
溫度循環試驗 (Thermal cycle test)	Cycle: 25+/-5℃/ 3-5 min --> -25+/-3℃/ 15 min --> 25+/-3℃/ 3-5 min --> 85+/-5℃/ 15 min Times: 100 Cycles 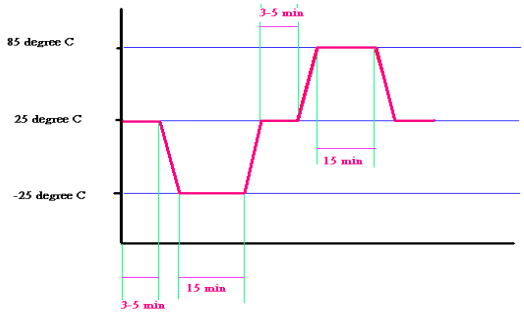	1. 外觀無斷裂,脫落,鬆動而且外觀無任何異常現象. 2. 電氣特性:在原 SPEC 規格內
焊錫耐熱性試驗 (Solder heat-resistance test) IR-Reflow or Wave solder	Pre-heating: 150±10℃ Time: 60 - 120 sec max Temperature: 260±5℃ max Time: 10 sec ±1 sec	1. 外觀：無腐蝕、裂痕，其他機械損傷,不能有焊錫不良,其焊錫面積需達到 95%. 2. 電氣特性：在原 SPEC 要求之規格內
焊錫附著性試驗 (Solderability test)	Temperature: 235±5℃ Time: 5±0.5 sec	1. 外觀：無斷裂、脫落而且外觀無任何異常現象 2. 焊錫面積需達到 95%

Customer	Qisda	Customer P/N	1J.40243.051	Spec Version	A3
Supplier	LI TAI	Maker P/N	CC-020943RP	Component Type	DRWW8x7

Form Version: 3.0

Test item	Test condition (Test Method)	inspection criteria
冷熱衝擊試驗 (Thermal shock test)	Cycle: -25℃ / 30 min -->100 ℃/ 30 min Times: 100 Cycles 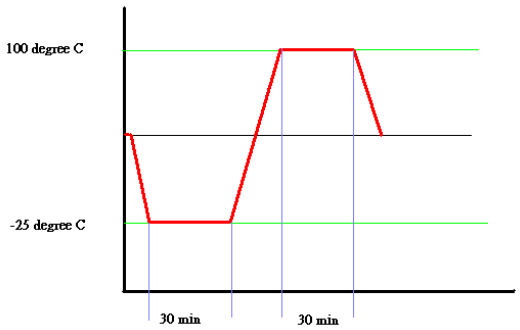	1. Inductance deviation within ±5.0%
振動試驗 (Vibration test)	Frequency:10 Hz --> 55 Hz --> 10Hz (for 1 min.) Time:6 hour Perpendicular directions (X,Y,Z)	1. 外觀:無裂痕,PIN 腳脫落與其他機械損傷. 2. 電性符合 SPEC 要求.
Solder Iron	Temperature: 390+/-10℃ Time: 4-5 sec	1. 外觀：無斷裂、脫落而且外觀無任何異常現象 2. 焊錫面積需達到 95%

Customer	Qisda	Customer P/N	1J.40243.051	Spec Version	A3
Supplier	LI TAI	Maker P/N	CC-020943RP	Component Type	DRWW8x7

Form Version: 3.0

● Qisda Check List

No	Check Point	Remark	Supplier Confirm (Pass or N/A)
1	2Pin 以上 Choke 類零件需注意防呆		N/A
2	Transformer 的繞組需加註繞法疏繞需注意是否需平均疏繞。走線槽位是否可避免傷到漆包線及是否與 Core 距離太近. 需注明走線方向順時針？逆時針？		N/A
3	Transformer 如果繞線太細（低於 0.04mm）， 外部需包 TAPE。		N/A
4	是否標示研磨 Core 位置(打點)		N/A
5	Transformer 出入線結線：不可超過 BOBBIN stand off Cut off PIN ：需與 BOBBIN stand off 齊平 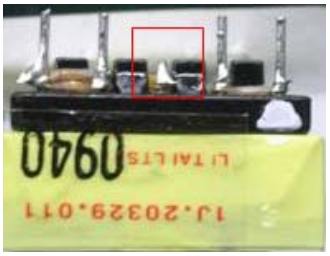		N/A
6	Power Transformer 限定常用 Core 廠商： Others :TDK、TDG、SAMWHA、FERROXCUBE（PHILIPS）、TOKIN、NICERA Projector: TDK、FERROXCUBE（PHILIPS）、TOKIN、NICERA		N/A
7	Material List 標註 UL No.		PASS
8	規格書中需注明測試設備（指定測試設備：HP-4284A）。 電感測試條件一般為：40KHz 1V Hi-pot 測試條件一般為：3mA/ 1min	如需 CHEN HWA 量測，則須比較二種設備誤差 將誤差值加入到實際測試值中	PASS
9	使用 Ring choke, 引腳出線處需加 Teflon tube，tube 至少深入至線包不會短路，不得低於 core 底部；底部需加 PCB 板，起固定隔離作用。		N/A
10	Choke 類電感外部加熱縮套管，需保證套管高於線圈		PASS
11	Chock 類電感線徑若≤0.6mm，則不能由銅線直接沾錫作為 PIN 腳，必須加底座		N/A

12	所有 Transformer 都要 "真空" 含浸，以防止異音及耐壓不足		N/A
13	Transformer 需廠商提供包裝方式，注意每層之間需加隔板，避免零件受擠壓		N/A
14	Ring Choke 的測試頻率需定義為 100KHz/1V		N/A
15	臥式 ER2828 所用 BOBBIN ,需在 BOBBIN 兩側貼 margin tape 		N/A
16	Transformer 需在規格書中定義:pin 腳需二次沾錫 (請確認剪腳處是否產生錫裂)		N/A
17	一二次側跨接的 power transformer，為保證其與 PCB 表面良好絕緣，要求：二次側需包 2 層膠布，成品外部再包 2 層膠布.具體如下圖 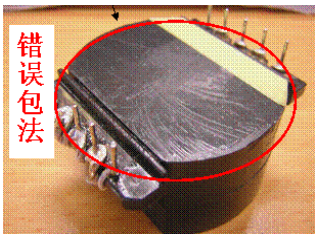 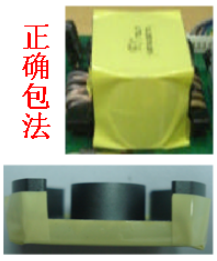		N/A

Customer	Qisda	Customer P/N	1J.40243.051	Spec Version	A3
Supplier	LI TAI	Maker P/N	CC-020943RP	Component Type	DRWW8x7

Form Version: 3.0

Qisda Format History

Date	Version	Change Notice	Owner
2010-12-3	V1.0	Org	Jeremy Jong
2011-1-3	V2.0	1.Add Qisda Logo 2.Add Power Transformer 限定常用 Core 廠商 (NICERA) 3.Reliability 設為必須符合條件	Jeremy Jong
2012-04-16	V3.0	1. Add photo for final sample. 2. Add Core dimension drawing. 3. Update material list form with thickness.	Carol.Sung