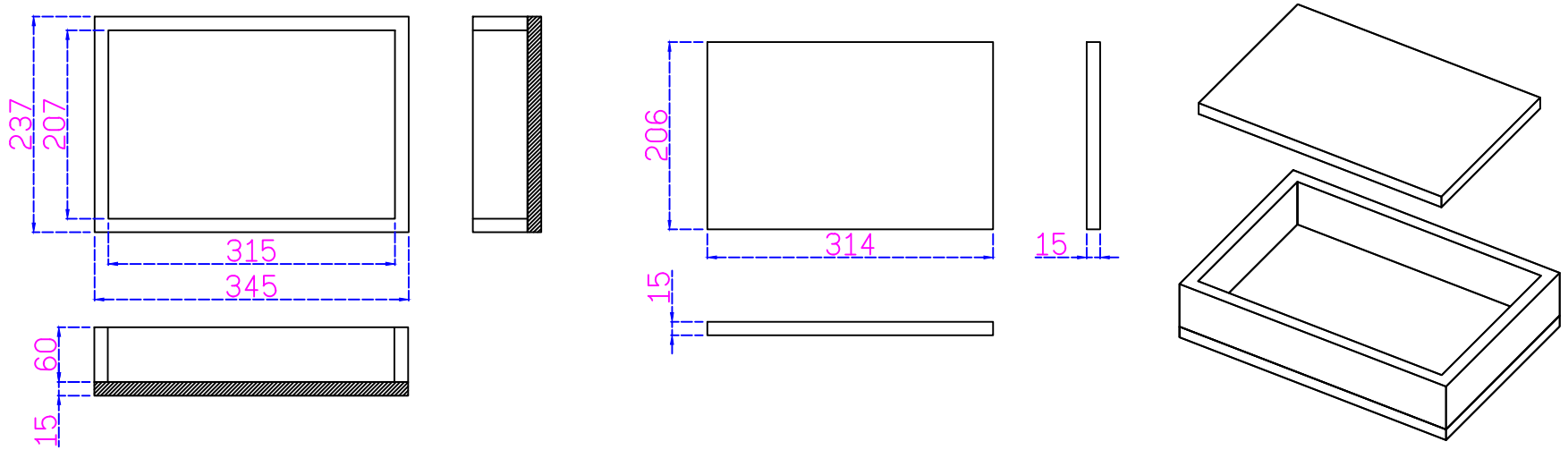

AB/F 358*238*396mm

