APPROVAL SHEET



MODEL	: DPS-65VB T
Customer	: QISDA
Customer P/N	: 2E.A125D.W18
Rev	: 07
DATE	: Jan, 14, 2022

TABLE OF CONTENTS

1.電氣特性
2.線路圖
3. PCB Layout
4.上下case機構尺寸圖
5. AC connector 尺寸圖
6. Plug/音叉完整尺圖
7. BOM list
8.包裝圖
9. PE袋(AC端需開口)SPEC
10. PE bag label spec
11. CABLE外被印字spec
12. Delta label spec
13.Cable detail

REV.	Description	Raise by	Date
00	Release MP (Modify DPS-65VB C)	馮建強/李澤丹	11/05'16
01	Update item 2.14	王雲龍	11/27/'17
02	Update item 2.14	洪志楊	08/22/'19
03	Update item 2.12	李洪騰	12/21/'19

DELTA CONFIDENTIAL

台達電子工業股份有限公司
DELTA ELECTRONICS, INC.

DESCRIPTION :
電氣規格 (Electrical Specification)

THESE DRAWINGS AND SPECIFICATIONS ARE THE PROPERTY OF DELTA ELECTRONICS, INC. AND SHALL NOT BE REPRODUCED OR USED AS THE BASIS FOR THE MANUFACTURE OR SELL OF APPARATUSES OR DEVICES WITHOUT PERMISSION.

MODEL NO. :
DPS-65VB T

Date	Drawn	Design (EE)	Design (ME)
12/21/'19	金雨霞	李洪騰	李澤丹

DOCUMENT NAME. :
ES-65VB T

REV.
03

Table of Contents

1. ELECTRICAL 4
    1.1 Input Characteristics: 4
        1.1.1 Nominal Voltage 4
        1.1.2 Input Voltage Range 4
        1.1.3 Rated Frequency 4
        1.1.4 Frequency Range 4
        1.1.5 Input Current 4
        1.1.6 Inrush Current Limit (cold start) 4
        1.1.7 Efficiency (Warm Up) 5
        1.1.8 No Load Power Consumption 5
    1.2 Output Characteristics: 5
        1.2.1 Rated Voltage 5
        1.2.2 Voltage Range 5
        1.2.3 Current 5
        1.2.4 Output Ripple and Noise 5
        1.2.5 Turn On delay time 6
        1.2.6 Hold up time 6
        1.2.7 Rise time 6
        1.2.8 Peak load: 6
        1.2.9 Load transient responses 6
        1.2.10 Over-shoot 7
    1.3 Protection 7
        1.3.1 Over Voltage Protection 7
        1.3.2 Over Current Protection 7
        1.3.3 Short Circuit protection 7
        1.3.4 Over Temperature Protection 7
2. Environmental 8

DELTA CONFIDENTIAL

DELTA 台達電子工業股份有限公司 DELTA ELECTRONICS, INC.				DESCRIPTION : 電氣規格 (Electrical Specification)	
THESE DRAWINGS AND SPECIFICATIONS ARE THE PROPERTY OF DELTA ELECTRONICS, INC. AND SHALL NOT BE REPRODUCED OR USED AS THE BASIS FOR THE MANUFACTURE OR SELL OF APPARATUSES OR DEVICES WITHOUT PERMISSION.				MODEL NO. : DPS-65VB T	
Date	Drawn	Design (EE)	Design (ME)	DOCUMENT NAME. :	REV.
12/21/'19	金雨霞	李洪騰	李澤丹	ES-65VB T	03

2.1 Temperature 8
2.1.1 Operating 8
2.1.2 Shipping/Storage 8
2.2 Humidity 8
2.2.1 Operating 8
2.2.2 Shipping/storage 8
2.3 Surface Temperature rise 8
2.4 Cooling 9
2.5 Altitude 9
2.6 Immunity 9
2.6.1 Lightning Surge Immunity 9
2.6.2 Electric Fast Transients (EFT) 9
2.7 Electrostatic Discharge (ESD) 9
2.8 Electromagnetic Interference (EMI) 9
2.9 Dielectric Withstand Voltage (HI – POT) 10
2.10 Leakage Current : 10
2.11 Insulation Resistance 10
2.12 Safety Standards 10
2.13 Safety Certificate 10
2.14 MTBF&Cap life 11
2.15 Random vibration. 11
2.16 Shock 11
3. Mechanical 11
3.1 Dimension: 11
3.2 Input AC socket Type 11
3.3 DC Cable Length: 12
3.4 output DC cable: 12

DELTA CONFIDENTIAL

1. ELECTRICAL

1.1 Input Characteristics:

1.1.1 Nominal Voltage

It is normal for **100 ~ 240Vac** input AC voltage.

1.1.2 Input Voltage Range

The Adapter shall operate from **100 ~ 264Vac**.

1.1.3 Rated Frequency

It is normal for **50Hz** or **60Hz** and single phase.

1.1.4 Frequency Range

The Adapter shall operate with an input frequency from **47 Hz** to **63 Hz.**

1.1.5 Input Current

Max input current shall be less than **2A RMS** at **100VAC** and rated load.

1.1.6 Inrush Current Limit (cold start)

Under cold start conditions @**100VAC** or **240VAC**,It shall be no component damaged ,and meet fuse and bridge diode I2t de-rating specified.

DELTA CONFIDENTIAL

1.1.7 Efficiency (Warm Up)

More than **88%** of average efficiency of **25%,50%,75%** and **100%** load tested at **115Vac/60Hz** and **230Vac/50Hz**.

1.1.8 No Load Power Consumption

Maximum non-load power consumption is less than **0.21W** at **115Vac/60Hz** and **230Vac/50HZ**.

1.2 Output Characteristics:

1.2.1 Rated Voltage

The rated output voltage is specified at **12V**.

1.2.2 Voltage Range

The output voltage will be performed **11.4V~ 12.6V**.

1.2.3 Current

This Adapter can work from **0A** to **5 .417A** and output voltage is in section 1.2.2 specified range.

1.2.4 Output Ripple and Noise

Output ripple voltage is **200mV** peak to peak or less.

Measured methods:

T1. Performed by **20MHz** bandwidth in oscilloscope.

T2. Applied a **0.1uF** ceramic capacitor and a **47uF** aluminum capacitor (ESR<0.35ohm) across output connector terminals.

DELTA CONFIDENTIAL

T3. Measured at the end of DC cable.

1.2.5 Turn On delay time

The Adapter shall switch on in less than **2** seconds at input voltage is **115Vac**.

1.2.6 Hold up time

The output voltage shall be sustained **6mS** within regulation requirement after loss **115Vac** and maximum load.

1.2.7 Rise time

DC output rise time from **10%** to **90%** of output voltage shall be less than **100ms** at **115Vac** and maximum load.

1.2.8 Peak load:

The adapter shall support **6.5A** for **3S** at **115Vac/60Hz** and **230Vac/50Hz**. The output voltage shall range from **10.8V** to **13.2V**.

1.2.9 Load transient responses

The adapter must within regulation when applied a step load from **1.5A** load to **100%** rated load at **0.05A/us** slew rate,**50%** duty cycle and frequency is **100Hz** & **5KHz**.

The output voltage will be performed **11.4V~ 12.6V**.

DELTA CONFIDENTIAL

1.2.10 Over-shoot

The output voltage shall neither exceed **13.2V** nor be outside the regulation requirements for more than **10mS** .

1.3 Protection

1.3.1 Over Voltage Protection

The output shall be protected to **latch off** at over-voltage condition, maximum value can't be over **17V.**

That might be return to normal state by AC reset .

1.3.2 Over Current Protection

The output shall be protected to **auto restart** at over-current condition , the maximum current shall less than **15A at 115Vac and 230Vac.**

1.3.3 Short Circuit protection

Output can be shorted without damage. The adaptor shall be protected to **auto restart** .

1.3.4 Over Temperature Protection

No deformation and no discoloration on case and will be shut down. The output shall be protected to **latch off** at over-temperature condition .

That will be return to normal state by AC reset.

DELTA CONFIDENTIAL

2. Environmental

2.1 Temperature

2.1.1 Operating

operating range :**0** ℃ to **+40**℃.

The AC Adapter max output power is 65W and no any components damage at 40℃**.**

2.1.2 Shipping/Storage

The AC Adapter shall be capable of withstanding ambient temperature from **-20**℃ to **+80**℃.

2.2 Humidity

2.2.1 Operating

The AC Adapter shall be capable of operation in relative humidity of **20%** to **80%** relative humidity, non-condensing.

2.2.2 Shipping/storage

The AC Adapter shall be capable of withstanding ambient relative humidity of **10%** to **90%** relative humidity, non-condensing.

2.3 Surface Temperature rise

The case surface temperature rising shall less than **55**℃ with **90V** input voltage.

DELTA CONFIDENTIAL

2.4 Cooling

The Adapter is convection cooled only.

2.5 Altitude

The Power is operates properly at altitude between **0 to 5,000 meters.**

2.6 Immunity

2.6.1 Lightning Surge Immunity

This is to follow the norm of IEC-61000-4-5.

Line-Line : **+/-1KV** ,Normal operating.

Line- Earth: **+/-2KV** , Normal operating.

2.6.2 Electric Fast Transients (EFT)

This is to follow the norm of IEC-61000-4-4 .

Line-Line :**+/-2KV**, Normal operating.

2.7 Electrostatic Discharge (ESD)

This is to follow the norm of IEC61000-4-2.

±**15KV** air discharge ,Normal operating.

±**8KV** contact discharge ,Normal operating.

2.8 Electromagnetic Interference (EMI)

The adapter shall comply with the following national standards.

DELTA CONFIDENTIAL

(a) CISPR 32 Class B

(b) VCCI Class B

(c) FCC Class B

2.9 Dielectric Withstand Voltage (HI – POT)

Applied **3000Vac , 1 minute** between AC input and secondary, Cut-off current shall be less than **10mA**.

Applied **3000Vac ,3 seconds** for production line.

2.10 Leakage Current :

The AC leakage current is less than **750μA** when adapter is connected to **240Vac/60Hz** at normal condition.

2.11 Insulation Resistance

The insulation resistance shall be not less than **30Mohms** after application of **500Vdc**for **1 minute** between AC input and secondary.

2.12 Safety Standards

The Adapter shall meet the requirements specified of EN60950-1&IEC62368-1

2.13 Safety Certificate

UL/CUL,CB,CCC,TUV,CE,BSMI,PSE,KC,RCM
EAC,NOM,TUV-S,ANATEL,SASO,SABS,BIS,MEPS,NRCAN
The power supply shall meet the CCC tropical standard.

DELTA CONFIDENTIAL

2.14 MTBF&Cap life

The calculated MTBF shall be 100,000 hours of continuous operation at 25℃,65W and input voltage of 100Vac. The E_cap（using JP cap） shall be more than 3 Years of 60W at 25°C/100Vac. ”

2.15 Random vibration.

Non-operating:
Sine Wave
Acceleration:1G Max.
Frequency:10-500Hz,one octave/min.
Force Direction:X,Y,Z Vibration Duration:15min

2.16 Shock

Non-operating：
Half-Sine Wave
Acceleration:40G.
Duration:6ms.
Both directions on three mutually perpendicular axes.A total of six shock inputs.
Operating：
Half-Sine Wave
Acceleration:10G.
Duration:6ms.
Both directions on three mutually perpendicular axes.A total of five shock inputs.(Except top)

DELTA CONFIDENTIAL

3. Mechanical

3.1 Dimension: 115*51.5*30.5(mm)

3.2 Input AC socket Type: C14

3.3 DC Cable Length: 1200

3.4 output DC cable: UL 1571 # 17 AWG

DELTA CONFIDENTIAL

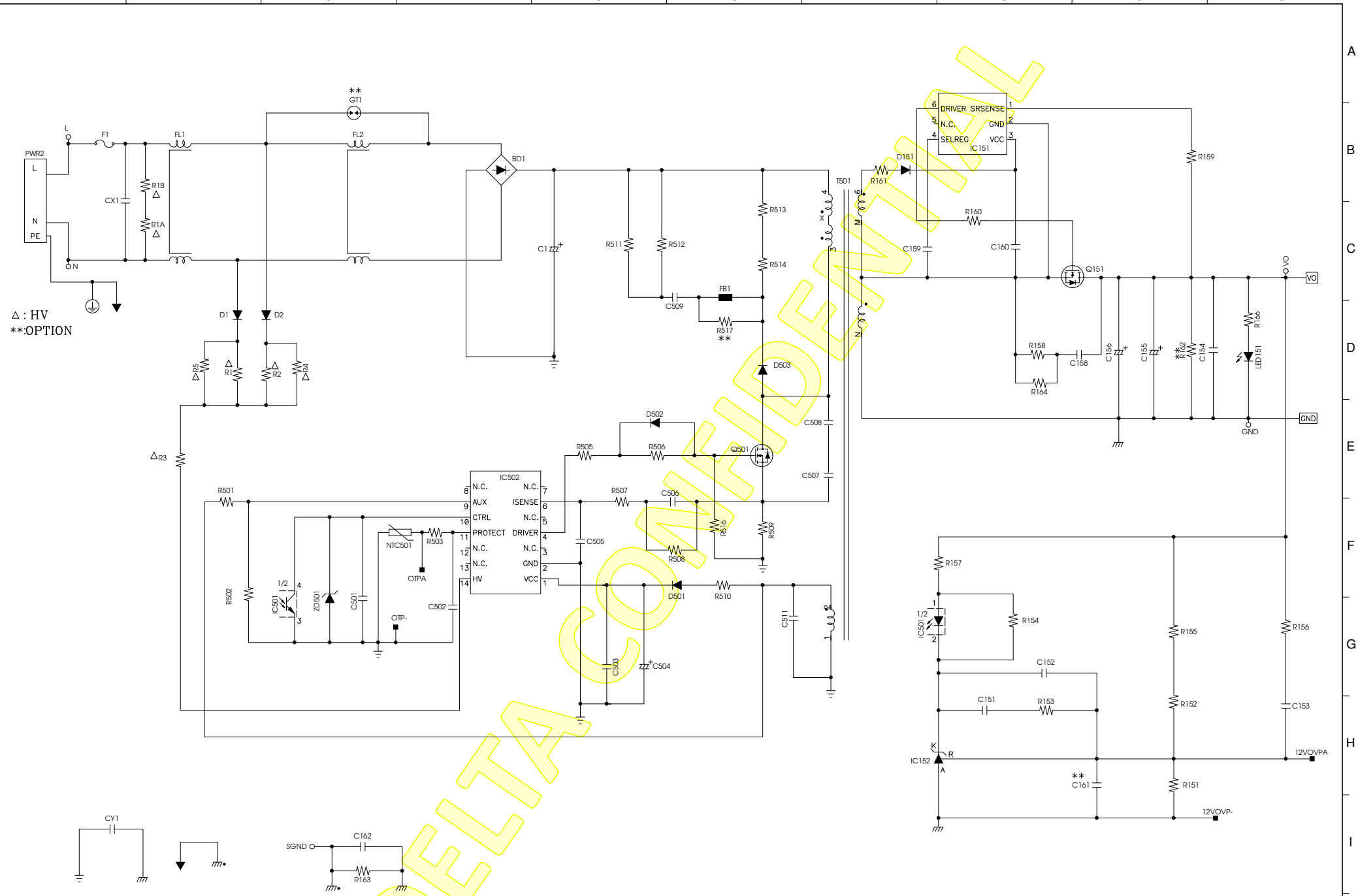

DELTA CONFIDENTIAL

DELTA ELECTRONICS, INC.	Date: 12/23/19'	LY.REV: 1	Drawn: Jodie.Zhang	Checked	Approved	MODEL NAME	REV. / SHEET
	PWB: D65VPDR0C0	FILE NAME: D65VPDR1		Tommy.Tan 12/23/19'	JACK.HOU 12/23/19'	DPS-65VB T	01 / 01 OF 01
	DESCRIPTION: SCHEMATIC OF SWITCHING POWER SUPPLY						

THESE DRAWINGS AND SPECIFICATIONS ARE THE PROPERTY OF DELTA ELECTRONICS, INC. AND SHALL NOT BE REPRODUCED OR USED AS THE BASIS FOR THE MANUFACTURE OR SELL OF APPARATUSES OR DEVICES WITHOUT PERMISSION.

Frame Name:DF-SCA2H-1R01.SCH

DELTA ELECTRONICS, INC.

PWB Engineering Specification

A.This PWB specification is designed for model: DPS-65VP D

Latter Description:

1. Solder side copper trace drawing ----------	PT- 65VP D	Rev :	0
2. Component side copper trace drawing ---	PT-1-	Rev :	
3. Solder resist solder side ----------	PR- 65VP D	Rev :	0
4. Solder resist component side ----------	PR-1-	Rev :	
5. Silk screen solder side ----------	PW- 65VP D	Rev :	0
6. Silk screen component side ----------	PW-1- 65VP D	Rev :	0
7. Mechanical outline ----------	PD- 65VP D	Rev :	0
8. Drilling hole ----------	PH- 65VP D	Rev :	0
9. Mechanical outline for panel form ----------	PP- 65VP D	Rev :	0

B.PWB is: ☐ Double Side ☑ Single Side

C.PWB Material: ☐ FR-4 (Normal) ☑ CEM-1 (Normal) ☐ FR-1 (Normal)

☐ FR-4 (Halogen Free) ☐ CEM-1 (Halogen Free) ☐ FR-1 (Halogen Free)

☐ Other:

D.PWB Thickness: ☐ 1.6MM ☑ 1.2MM ☐ 1.0MM ☐ 0.8MM

E.Copper Weight: ☐ 1 OZ ☑ 2 OZ

F.Copper Surface Finish: ☐

☑ OSP Coating ☐ Gold Plating

G.Letter Figure Print Color: Component Side: Black Solder Side: White

H.Unless otherwise specified , PWB shall comply with the most recent version requirements of DELTA PWB specification10000-0001.

DELTA CONFIDENTIAL

Model Name: **DPS-65VB D**	PWB P/N: **2950389200**	Code No.: **0**

Layout	Check	Project Engineer	Mechanical Engineer	Industrial Engineer	Manager
任麗星	陳亦安	莫樹玲	顧鋒勇	郭育菁	侯周康
05/23/18'	05/23/18'	05/23/18'	05/23/18'	05/23/18'	05/23/18'

DELTA ELECTRONICS, INC.

PWB Artwork Change Notes

Model: DPS-65VP D	Rev: 0	Code: 0	Date: 05/23/18'

☐ Re-layout

☑ Minor Change

☑ PT ☑ PR ☑ PW ☐ PD ☑ PH

☐ PT-1 ☐ PR-1 ☑ PW-1 ☑ PP

Item	Components	Holes	Pitchs
1	Change the block of C511,C159,CY1		
2	Add:R4,R5,R1A,R1B		
3	Add K&TK.		
4	Move C507&C508&C155&C156&GT1&J2		
6	Move the parts and marking partially		
7	Modify the trace and solder plating partially		
8	Modify the PP design drawing		
9			
10			
11			
12			
13			
14			

Item	Others
1	Rev : 2950346901→2950389200
2	Version change is comed form DPS-65VP REV :1 CODE : 0
3	
4	
5	

Layout	Check	Project Engineer	Mechanical Engineer	Industrial Engineer	Manager
任麗星	陳亦安	莫樹玲	顧鋒勇	郭育菁	侯周康
05/23/18'	05/23/18'	05/23/18'	05/23/18'	05/23/18'	05/23/18'

DELTA CONFIDENTIAL

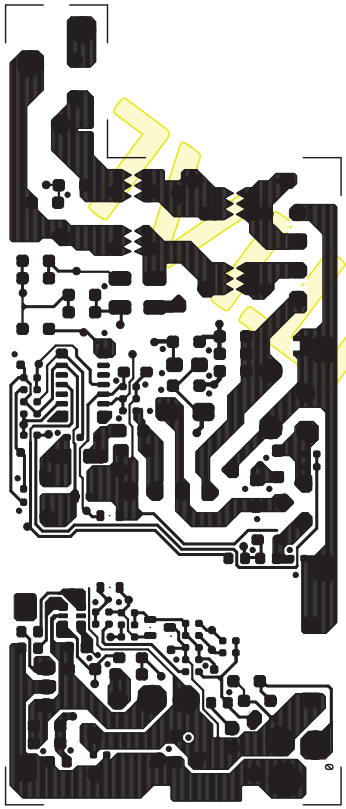

DELTA ELECTRONICS, INC.

THESE DRAWINGS AND SPECIFICATIONS ARE THE PROPERTY OF DELTA ELECTRONICS, INC. AND SHALL NOT BE REPRODUCED OR USED AS THE BASIS FOR THE MANUFACTURE OR SELL OF APPARATUSES OR DEVICES WITHOUT PERMISSION.

DRAWING NO: PT-65VP D	REV: 0
USED ON: DPS-65VB D	CODE: 0
MADE BY: LIXING.REN	DATE: 05/23/18
P/N: 2950389200	
SOLDER SIDE SIZE:1=1	

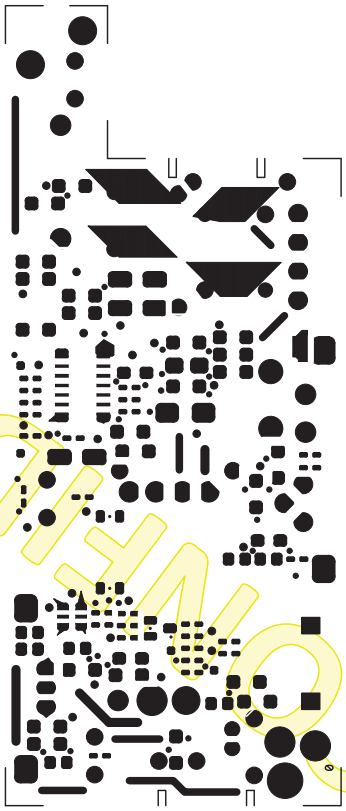

DELTA ELECTRONICS, INC.

THESE DRAWINGS AND SPECIFICATIONS ARE THE PROPERTY OF DELTA ELECTRONICS, INC. AND SHALL NOT BE REPRODUCED OR USED AS THE BASIS FOR THE MANUFACTURE OR SELL OF APPARATUSES OR DEVICES WITHOUT PERMISSION.

DRAWING NO: PR-65VP D	REV: 0
USED ON: DPS-65VB D	CODE: 0
MADE BY: LIXING.REN	DATE: 05/23/18
P/N: 2950389200	
SOLDER SIDE SIZE:1=1	

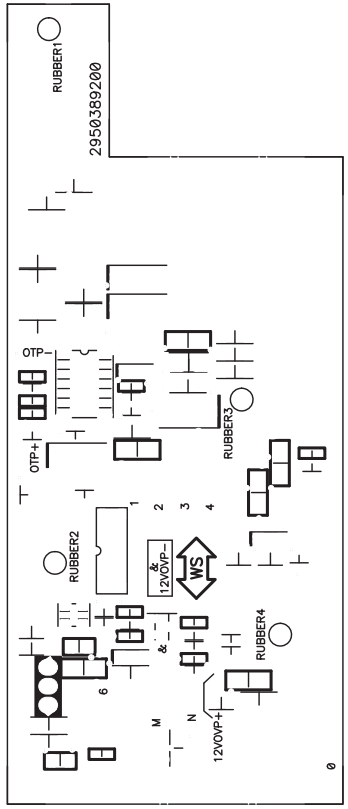

DELTA ELECTRONICS, INC.

THESE DRAWINGS AND SPECIFICATIONS ARE THE PROPERTY OF DELTA ELECTRONICS, INC. AND SHALL NOT BE REPRODUCED OR USED AS THE BASIS FOR THE MANUFACTURE OR SELL OF APPARATUSES OR DEVICES WITHOUT PERMISSION.

DRAWING NO: PW-65VP D	REV: 0
USED ON: DPS-65VB D	CODE: 0
MADE BY: LIXING.REN	DATE: 05/23/18
P/N: 2950389200	
SOLDER SIDE SIZE:1=1	

DELTA CONFIDENTIAL

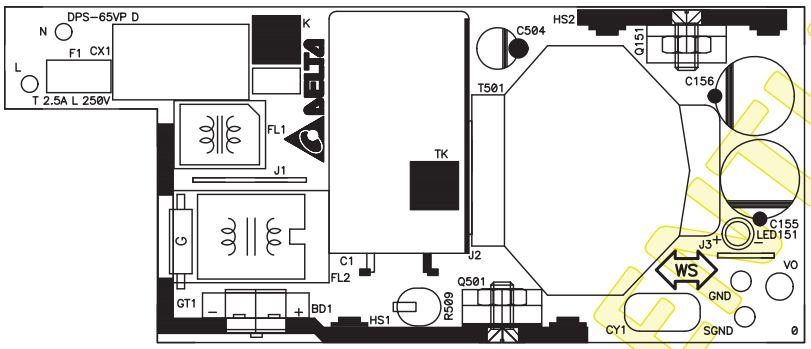

DELTA ELECTRONICS, INC.
THESE DRAWINGS AND SPECIFICATIONS ARE THE PROPERTY OF DELTA ELECTRONICS, INC. AND SHALL NOT BE REPRODUCED OR USED AS THE BASIS FOR THE MANUFACTURE OR SELL OF APPARATUSES OR DEVICES WITHOUT PERMISSION.
DRAWING NO: PW-1-65VP D REV: 0
USED ON: DPS-65VB D CODE: 0
MADE BY: LIXING.REN DATE: 05/23/18'
P/N:2950389200
COMPONENT SIDE SIZE :1=1

Drill Table

HoleDia(mm)	Symbol	Quantity	Plated	Tolerance	Slot
0.007	+	2	No		0.7(Circle)
0.009	X	2	No		0.9(Circle)
0.081	Y	4	No		0.8X1.4
0.102	T	1	No		1.0X1.5
0.610	M	2	No		1.0X1.2(Ellipse)
0.700		39	No		
0.800		4	No		
0.900		2	No		
1.000		18	No		
1.100		9	No		
1.200		9	No		
1.300		1	No		
1.700		1	No		
1.700		2	No	+0.1 , -0	
1.800	A	1	No		
2.000		2	No	+0.1 , -0	
2.400		1	No	+0.1 , -0	

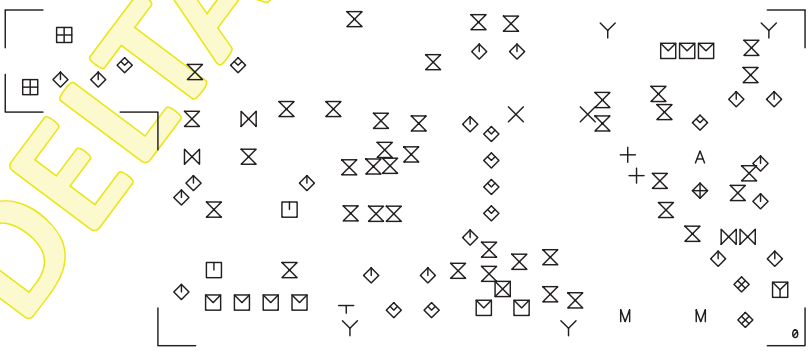

DELTA ELECTRONICS, INC.
THESE DRAWINGS AND SPECIFICATIONS ARE THE PROPERTY OF DELTA ELECTRONICS, INC. AND SHALL NOT BE REPRODUCED OR USED AS THE BASIS FOR THE MANUFACTURE OR SELL OF APPARATUSES OR DEVICES WITHOUT PERMISSION.
DRAWING NO: PH-65VP D REV: 0
USED ON: DPS-65VB D CODE: 0
MADE BY: LIXING.REN DATE: 05/23/18'
P/N:2950389200
COMPONENT SIDE SIZE :1=1

DELTA CONFIDENTIAL

DELTA ELECTRONICS, INC.

THESE DRAWINGS AND SPECIFICATIONS ARE THE PROPERTY OF DELTA ELECTRONICS, INC. AND SHALL NOT BE REPRODUCED OR USED AS THE BASIS FOR THE MANUFACTURE OR SELL OF APPARATUSES OR DEVICES WITHOUT PERMISSION.

DRAWING NO: PD-65VP_D REV: 0
USED ON: DPS-65VB_D CODE: 0
MADE BY: LIXING.REN DATE: 05/23/18
P/N: 2950389200
COMPONENT SIDE UNIT:mm

K & TK Mark
2D Barcode area

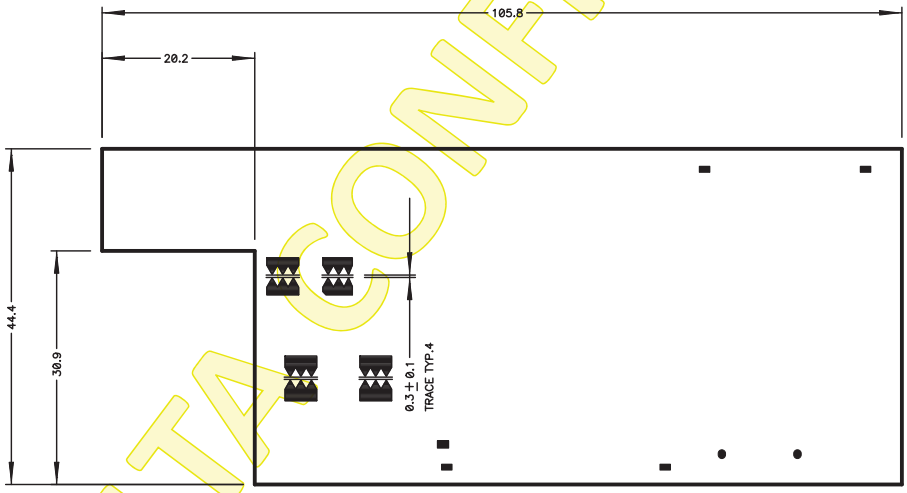

DELTA CONFIDENTIAL

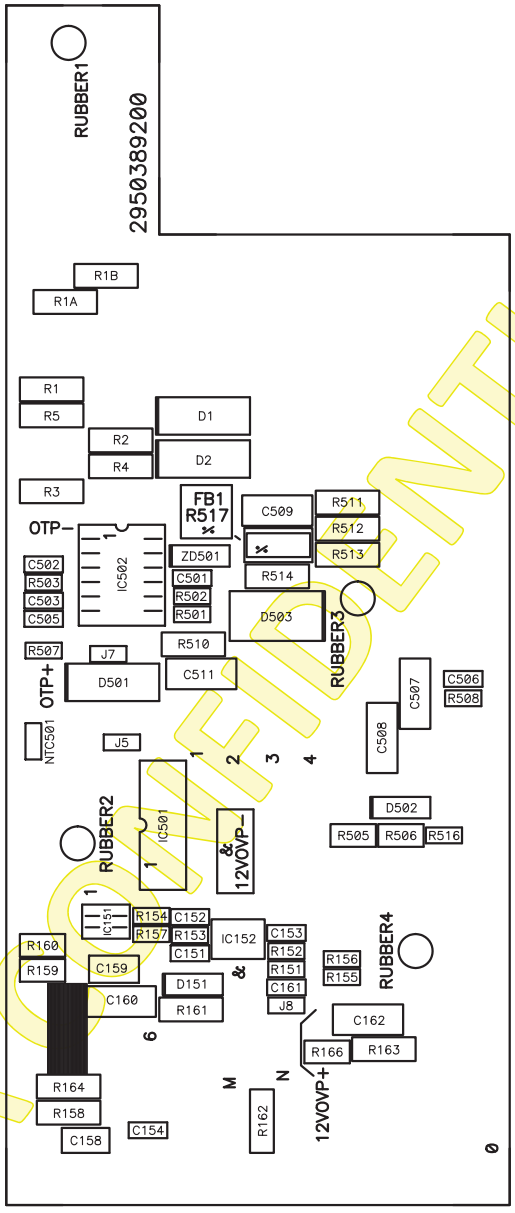

DELTA ELECTRONICS, INC.

THESE DRAWINGS AND SPECIFICATIONS ARE THE PROPERTY OF DELTA ELECTRONICS, INC. AND SHALL NOT BE REPRODUCED OR USED AS THE BASIS FOR THE MANUFACTURE OR SELL OF APPARATUSES OR DEVICES WITHOUT PERMISSION.

DRAWING NO: PW-65VP D REV: 0

USED ON: DPS-65VB D CODE: 0

MADE BY: LIXING.REN DATE: 05/23/18

P/N: 2950389200

SOLDER SIDE SIZE:1=1

DELTA CONFIDENTIAL

REV.	Description	REV.	Description
01	(6,F) Add DIM. 29.5 / 72.8 / 19.4 (客戶要求：增加尺寸定義以便匹配客戶系統) 顧鋒勇 11/23'18		
02	(6,F) DIM. 72.8增加"*"重點管控 (5,F) DIM. 19.4增加"*"重點管控 (客戶要求) 鄧勇芳 12/20'18		

DELTA CONFIDENTIAL

台達電子工業股份有限公司
DELTA ELECTRONICS, INC.

Description: PHYSICAL DIMENSIONS OF POWER SUPPLY

THESE DRAWINGS AND SPECIFICATIONS ARE THE PROPERTY OF DELTA ELECTRONICS, INC. AND SHALL NOT BE REPRODUCED OR USED AS THE BASIS FOR THE MANUFACTURE OR SELL OF APPARATUSES OR DEVICES WITHOUT PERMISSION.

Part No. DPS-65VB T

REV. 02

USED ON DPS-65VB T

SHEET 2 OF 2

FRAME NAME: DF-HTYA4V-1R01.DWG

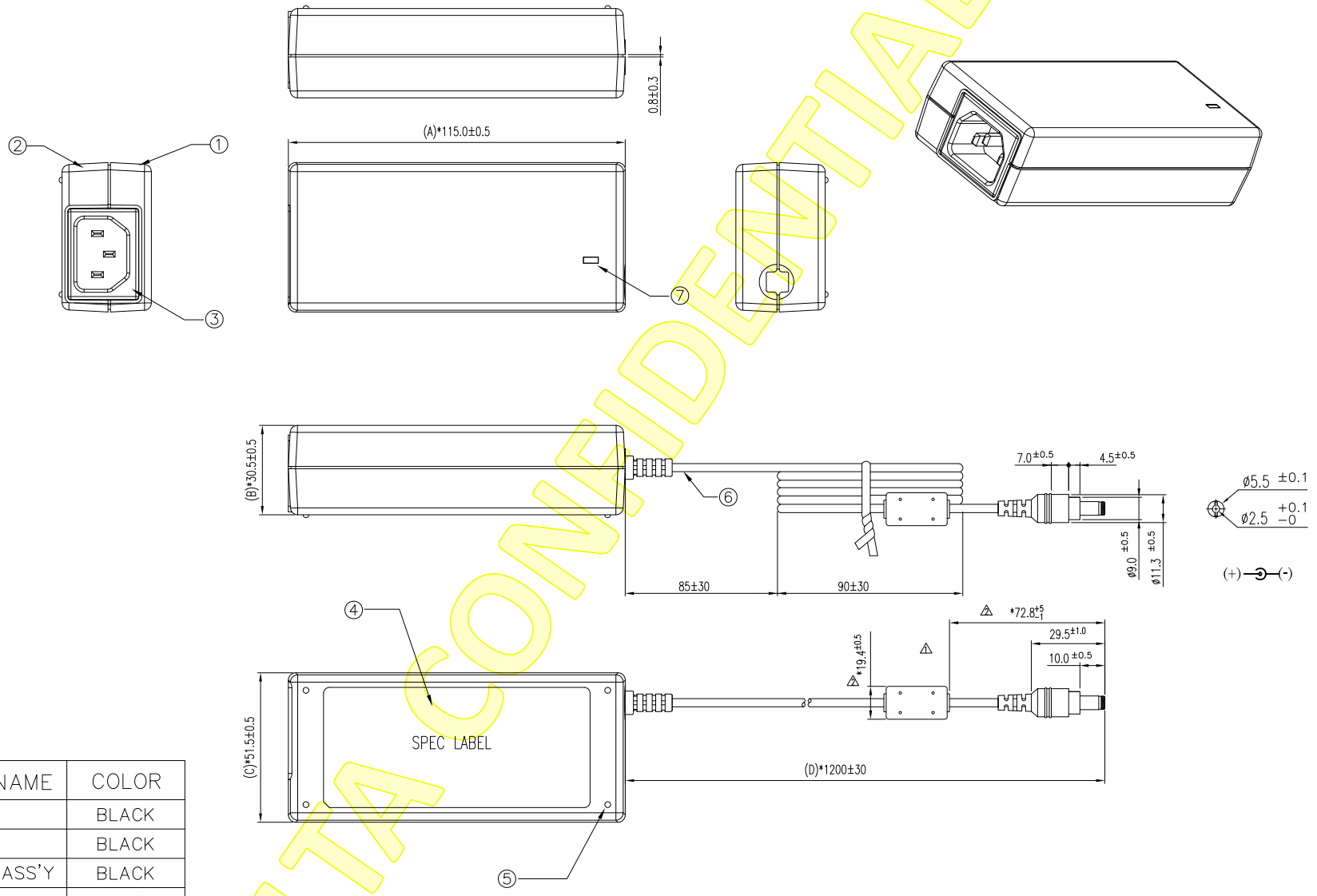

NOTES:

1.

ITEM	PART NAME	COLOR
①	CHASSIS	BLACK
②	COVER	BLACK
③	SOCKET ASS'Y	BLACK
④	LABEL	BLACK
⑤	FOOT	BLACK
⑥	POWER CORD	BLACK
⑦	LENS	CLEAR

2. "*" IS CRITICAL DIM WHICH MUST BE MEASURED.

DELTA CONFIDENTIAL

台達電子工業股份有限公司
DELTA ELECTRONICS, INC.

Drawn: 賀司賢 11/01'16
Design: 李澤丹 11/01'16

THESE DRAWINGS AND SPECIFICATIONS ARE THE PROPERTY OF DELTA ELECTRONICS, INC. AND SHALL NOT BE REPRODUCED OR USED AS THE BASIS FOR THE MANUFACTURE OR SELL OF APPARATUSES OR DEVICES WITHOUT PERMISSION.

THIRD ANGLE PROJECTION

Description: PHYSICAL DIMENSIONS OF POWER SUPPLY

DIMENSIONAL TOLERANCES HOLES: ±0.05 ANGLES: ±0.5°

X	±0.25	DECIMALS	UP~100 : ±0.2	250~300 : ±0.4	UP~600	: ±1.5
>30~100	: ±0.35	X	: ±0.3	100~150 : ±0.25	300~350 : ±0.45	600~900	: ±2.4
>100~300	: ±0.5	X.X	: ±0.2	150~200 : ±0.3	350~400 : ±0.5	900~OVER : ±3.1
ABOVE 300	: ±0.8	X.XX	: ±0.1	200~250 : ±0.35		

A2 SIZE

Part No. DPS-65VB T REV. 02

SCALE | UNIT MM | USED ON DPS-65VB T | SHEET 1 OF 2 | ISSUE DATE: 11/01'16

FRAME NAME: DF-MEA2H-1R01.DWG

P/N	PLASTIC MATERIAL	COLOR	t	B(STRAP)	GND STRAP		L/N STRAP	
					P/N	LENGTH: X	P/N	LENGTH: Y
3030130903	a	BLACK	2.0	B−9	3350542300	———	L: 3350215000 N: 3350214900	———

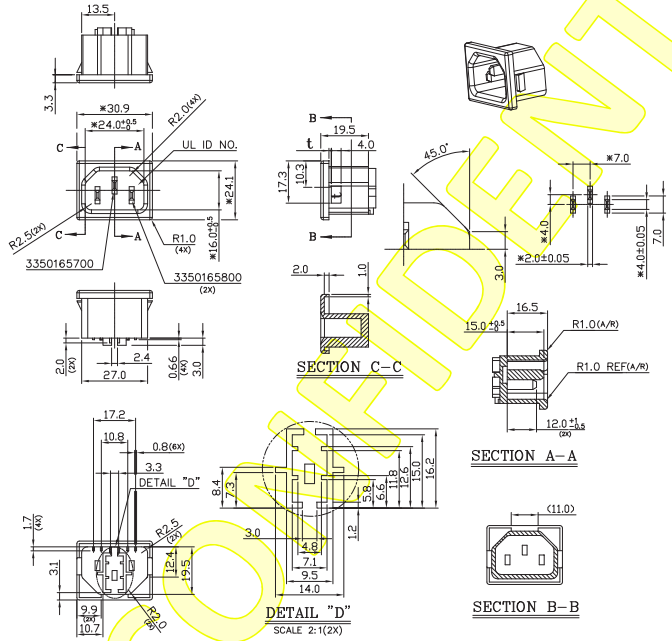

B−9 STANDARD TYPE

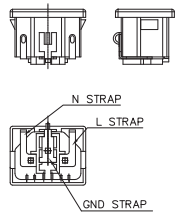

NOTES:

1. RATING: 10~15A 250VAC.
2. MATERIAL:
   (a).PLASTIC:

		REMARK
a	PC, Makrolon 6485, UL 94V−0	(HF)MUST MEET 10000−2003
b	PBT+30%GF, Nan Ya 1403G6 OR LONGLITE 4130, UL 94V−0	
c	PBT+15%GF, Nan Ya 1403G3 OR LONGLITE 4130, UL 94V−0	
d	PA66, Technyl A 50H1 , UL 94V−0	(HF)MUST MEET 10000−2003

   (b).BRADE TERMINAL: BRONZE STRIP t=2mm NI−PLATED,3uM MIN.
   (c).STRAP TERMINAL:BRONZE STRIP t=0.8mm COPPER−PLATED,2uM & Tin−PLATED,3uM MIN.
3. WITHSTAND VOLTAGE: AC 4000V/1 MIN.
4. INSULATION RESISTANCE: MORE THAN 1000MΩ (AT DC 500V)
5. MUST MEET DELTA SPEC.: 10000−0007 & 10000−0008 & 10000−0162.
6. TYPE IEC 320−C14.
7. THE RIVET FORCE MUST WITHSTAND 20Kgf/1 MIN.
8. CAVITY CODE (SEE DETAIL "A", CODE X): DEPEND ON DELTA'S SPEC.:10000−0008.
   UL ID CODE (SEE DETAIL "A", CODE Y): DEPEND ON DELTA'S SPEC.:10000−0008.
   CCC ID CODE: DEPEND ON DELTA'S SPEC.:10000−0008.
9. THE RIVETED PIN'S RESISTANT MUST BE LOWER THAN 15m .
10. SAFETY NAME: SK−1015C.

DELTA CONFIDENTIAL

台達電子工業股份有限公司
DELTA ELECTRONICS, INC.

Drawn: James.Chuang 05/26'17

Design: James.Chuang 05/26'17

THESE DRAWINGS AND SPECIFICATIONS ARE THE PROPERTY OF DELTA ELECTRONICS, INC. AND SHALL NOT BE REPRODUCED OR USED AS THE BASIS FOR THE MANUFACTURE OR SELL OF APPARATUSES OR DEVICES WITHOUT PERMISSION.

THIRD ANGLE PROJECTION

Description: SOCKET

DIMENSIONAL TOLERANCES
HOLES : ±0.05 ANGLES : ±0.5°

( )		(V)		( )		( )	
<30	: ±0.25	DECIMALS	UP~100 : ±0.2	250~300 : ±0.4	UP~600	: ±1.5	
>30~100	: ±0.35	X : ±0.3	100~150 : ±0.25	300~350 : ±0.45	600~900	: ±2.4	
>100~300	: ±0.5	X.X : ±0.2	150~200 : ±0.3	350~400 : ±0.5	900~OVER	: ±3.1	
ABOVE 300	: ±0.6	X.XX : ±0.1	200~250 : ±0.35				

SCALE	--	UNIT	mm	USED ON	ADP-

A3 SIZE

Part No. 303A0001PA

REV. 00

SHEET 1 OF 1

ISSUE DATE: 05/26'17

FRAME NAME: DF-MEA3H-1R01.DWG

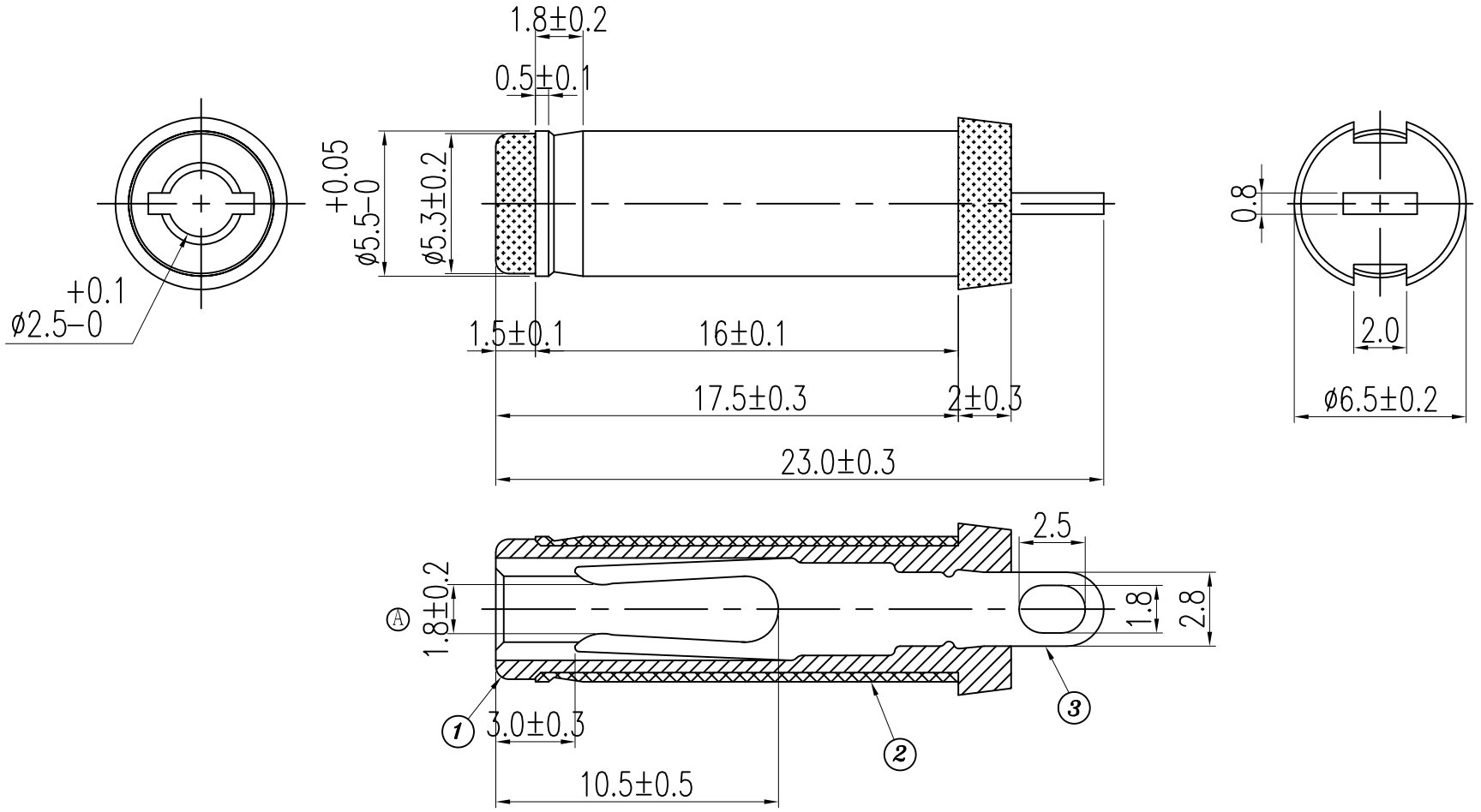

一般公差	單位
	mm
尺寸區分	公差
0以上1.0以下	±0.1
1.0以上6.0以下	±0.2
6.0以上18.0以下	±0.3
18.0以上40.0以下	±0.4
40.0以上	±0.5

研發	
業務	
管理	
工模	
文管	
品保	
資材	
車床	
生產	
台北	
蘇州	

NO	MATERIAL	PLATING	THICKNESS
7			
6			
5			
4			
3	P-BRONZE	NICKEL	2um以上
2	BRASS	NICKEL	2um以上
1	PBT+15%GF	BLACK	

7			
6			
5	11.14.02	增加A尺寸標注	1
4	DATE	REVISION	MARK

UNIT	mm
SCALE	4: 1
DATE	04/06/2000

APPROVED BY	CHECKED BY	DESINGED BY	DRAWN BY
承認	檢圖	設計	制圖 劉林俠

皇積精機電子廠
HUANG JI MECHANICAL ELECTRONIC FTY,

DESCRIPTION : DC PLUG
ø5.5*ø2.5*23.0

P/N : 5525TVM230-1T00-04-M3.0

DRAWN NO: E-5008A

EDITION V2.0

(台灣) TEL:02-86862811 , 86862812 , 86862780 , 86862781 FAX:02-86860775
(大陸) TEL:0752-6616116 , 6616226 , 6916000至6916100(100個號碼) FAX:0752-6616035 , 6916038 , 6916039
E-mail:fang.ji@pub.huizhou.gd.cn
Http://www.fuangee.com.tw

<DPS-65VB T CUSTOMER BOM PART LIST>

DATE:08/22/'20

REV:02(Model Rev:05)

DESCRIPTION	MFG NAME	MFG PART	ALT GRP	%	QPA	DESIGN NO	Item text 1
TAPE PLE 40mm #1350F-1 YEL	Minnesota Mining Manufacture Co.,	#1350F-1 W=40	A2	100	0.080		L=40MM*2 FOR SHIELD
TAPE PET 40mm CT-280 YEL	YAHUA STICKING TAPE CO LTD	CT-280 W=40	A2	0	0.080		L=40MM*2 FOR SHIELD
LABEL EMPTY PLE 25*10 T0.075					1.000		SHOPFLOOR
	CYMMETRIK						
	FAN JA (HONG YANG)						
	SUNWAY						
LABEL SPEC PLE 90*40 T0.135 DPS-65VB E					1.000		SPEC LABEL
	CYMMETRIK						
	FAN JA (HONG YANG)						
	SUNWAY						
LABEL SPEC PAPER 90*80 T0.07 3200124400	CYMMETRIK				0.031		FOR CARTON/TRAY
	FAN JA (HONG YANG)						
	SUNWAY						
LABEL EMPTY PAPER 90*80 T0.07	CYMMETRIK				1.000		
	FAN JA (HONG YANG)						
	SUNWAY						
LABEL PACKING PAPER 173*100 T0.072	CYMMETRIK				0.031		PACKING LABEL ONLY FOR Brazil
	FAN JA (HONG YANG)						
	SUNWAY						
LABEL EMPTY PET 50.8*12.7 T0.05	CYMMETRIK				1.000		PE BAG LABEL FOR QISDA
	FAN JA (HONG YANG)						
	SUNWAY						
CASE CHASSIS PC V-0 115*51.5*15.7 BLK	BAYER	MAKROLON 6485	B3	0	1.000		
	IDEMITSU (2014/4/24)	AZ2201					
	LOTTE (2017/04/06)	INFINO HN-1064I					
	SABIC	LEXAN 945					
CASE COVER PC V-0 115*51.5*14 BLK	BAYER	MAKROLON 6485	B4	0	1.000		
	IDEMITSU (2014/4/24)	AZ2201					
	LOTTE (2017/04/06)	INFINO HN-1064I					
	SABIC	LEXAN 945					
CASE COVER PC V-0 115*51.5*14 BLK	BAYER	MAKROLON 6485	B4	0	1.000		
	IDEMITSU (2014/4/24)	AZ2201					
	LOTTE (2017/04/06)	INFINO HN-1064I					
	SABIC	LEXAN 945					
CASE CHASSIS PC V-0 115*51.5*15.7 BLACK	BAYER	MAKROLON 6485	B3	0	1.000		
	IDEMITSU (2014/4/24)	AZ2201					
	LOTTE (2017/04/06)	INFINO HN-1064I					
	SABIC	LEXAN 945					
CASE CHASSIS PC V-0 115*51.5*15.7 BLACK	BAYER	MAKROLON 6485	B3	100	1.000		
	IDEMITSU (2014/4/24)	AZ2201					
	LOTTE (2017/04/06)	INFINO HN-1064I					
	SABIC	LEXAN 945					
CASE COVER PC V-0 115*51.5*14 BLACK	BAYER	MAKROLON 6485	B4	100	1.000		
	IDEMITSU (2014/4/24)	AZ2201					
	LOTTE (2017/04/06)	INFINO HN-1064I					
	SABIC	LEXAN 945					
CASE CHASSIS PC V-0 115*51.5*15.7 BLACK	BAYER	MAKROLON 6485	B3	0	1.000		
	IDEMITSU (2014/4/24)	AZ2201					
	LOTTE (2017/04/06)	INFINO HN-1064I					
	SABIC	LEXAN 945					
CASE COVER PC V-0 115*51.5*14 BLACK	BAYER	MAKROLON 6485	B4	0	1.000		
	IDEMITSU (2014/4/24)	AZ2201					
	LOTTE (2017/04/06)	INFINO HN-1064I					
	SABIC	LEXAN 945					
SHIELD AL 86.7*46.5*26.1*0.3 PICKLING					1.000		
	U-MORE (2011/10/25)						
SOCKET ASSY 3030130903 DPS-65VB A					1.000		
SOCKET C14 SK-1015C PC V-0 2	DELTA				1.000		
TUBE HS PO 4*0.25 BLK 600V 125℃	SALIPT	S-901-600			0.038		L=19MM *2 FOR L&N
WIRE+TERM 1007 #18 BLK L100 80℃	CAROL				1.000		
	FOXCONN (2008/05/30)						
	JIANN TAY						
	WALEX (2009/4/23)						
	YI YI (2008/05/30)						
WIRE+TERM 3266 #22 BRN L35 125℃	CAROL				1.000		
	FOXCONN (2008/05/30)						
	JIANN TAY						
	WALEX (2009/4/23)						
	YI YI (2008/05/30)						
WIRE+TERM 3266 #22 BLUE L55 125℃	CAROL				1.000		
	FOXCONN (2008/05/30)						
	JIANN TAY						
	WALEX (2009/4/23)						
	YI YI (2008/05/30)						
SHIELD ASSY DPS-65VB A					1.000		
	U-MORE (2011/10/25)						
PWB ASSY MAIN BD DPS-65VB T	DELTA ELECTRONICS,INC.	DPS-65VB T			1.000		
DC POWER CORD PLUG L1200 BLK DPS-65VB T	CAROL				1.000		DC POWER CORD
	EVERFULL						
	HONG LIN(2013/10/1)						
	LCH (2009/03/11)						
SCREW M M3*0.5*6 FLAT C S18C ZN NL	DURABLE (2008/04/26)				1.000		FOR Q151
	GREAT-GOLD						
	KIM KUAO LENG						
	Teeson						
	Victor						
SCREW M M3*0.5*8 FLAT C S18C ZN NL	DURABLE (2008/04/26)				1.000		FOR Q501
	GREAT-GOLD						
	KIM KUAO LENG						
	Teeson						
	Victor						
NUT HEXH M3*2.4 S17C ZN	DURABLE (2008/04/26)				2.000		FOR Q151,Q501
	GREAT-GOLD						
	KIM KUAO LENG						
	Teeson						
	Victor						
TAPE PLE 28mm 2L #1350F-1 YEL	Minnesota Mining Manufacture Co.,	#1350F-1 W=28 2L			0.040		FOR HS2

DELTA CONFIDENTIAL

<DPS-65VB T CUSTOMER BOM PART LIST>

DATE:08/22/'20

REV:02(Model Rev:02)

DESCRIPTION	MFG NAME	MFG PART	ALT GRP	%	QPA	DESIGN NO	Item text 1
TUBE HS PO 7*0.25 BLK 600V 125℃	SALIPT	S-901-600			13.000		FOR R509
BUMPER BAKELITE V-0 3*2.25 BRN	Chang Chun	T200NA			1.000	RUBBE1	
BUMPER BAKELITE V-0 3*2.25 BRN	Chang Chun	T200NA			1.000	RUBBE2	
BUMPER BAKELITE V-0 3*2.25 BRN	Chang Chun	T200NA			1.000	RUBBE3	
BUMPER BAKELITE V-0 3*2.25 BRN	Chang Chun	T200NA			1.000	RUBBE4	
HSK STAMP AL1100F 56.8*21.3 T2 PICKLING					1.000	HSK1	
	DA-LIXING						
	WAN CHENG (2008/01/10)						
	YUYANG (2010/10/06)						
	SINCHI						
	WAN CHENG (2012/07/30)						
HSK STAMP AL1100F 27.6*21 T2 PICKLING					1.000	HSK2	
	DA-LIXING						
	WAN CHENG (2008/01/10)						
	YUYANG (2010/10/06)						
	SINCHI						
	WAN CHENG (2012/07/30)						
CLIP SUS 14.2*6.5*8*0.4					1.000		FOR BD1
	EMERCYS(2011/02/08)						
	LONGGUANG (2009/4/7)						
	TONG CHENG(2011/02/08)						
	WANCHENG						
	TRONWAY						
LED HOLDER PA V-2					1.000		FOR LED

DELTA CONFIDENTIAL

<DPS-65VB T CUSTOMER BOM PART LIST>

DATE:08/22/'20

REV:02(Model Rev:02)

DESCRIPTION	MFG NAME	MFG PART	ALT GRP	%	QPA	DESIGN NO	Item text 1
EOL CORE BEAD 3.5*1.8*3.25 30ohm K5B	KING CORE ELECTRONIC	K5B T 3.5*3.25*1.8	CX	0	1.000		FOR Q151 PIN2
CORE BEAD 3.5*1.8*3.25 25.8ohm C5A	FENGHERYIN CORPORATION	C5A RH 3.5*1.8*3.25	CX	100	1.000		FOR Q151 PIN2
CORE BEAD 3.5*1.8*3.25 25.8ohm B26	BEAD AND FERRITE ELECTRONICS (HK)	B26 T 3.5*3.25*1.8	CX	0	1.000		FOR Q151 PIN2
DIO BRD 4A 800V D3K-4P	SHINDENGEN ELECTRIC MANUFACTURING	UD4KB80-7100SV	AA	0	1.000	BD1	
DIO BRD 4A 800V D3K-4P	Yangzhou Yangjie Electronic	D4UB80A	AA	0	1.000	BD1	
DIO BRD 4A 800V KBP-4P	LITE-ON SEMICONDUCTOR CORP.	KBP408G	AA	100	1.000	BD1	
CAP AL 450V 100uF M 18*30 P7.5	NIPPON CHEMI-CON CORPORATION	EKMQ451ELL101MM30S	DB	100	1.000	C1	
CAP AL 450V 100uF M 18*30 P7.5	NIPPON CHEMI-CON COR	EKXG451ELL101MM301	DB	0	1.000	C1	
CAP AL 450V 100uF M 18*30 P7.5	RUBYCON CORPORATION	450BXW100MEFR18*30	DB	0	1.000	C1	
CAP MC SMD 50V 0.01uF K X7R 0603	YAGEO	CC0603KRX7R9BB103	AC	0	1.000	C151	
CAP MC SMD 50V 0.01uF K X7R 0603	TDK	C1608X7R1H103KT	AC	0	1.000	C151	
CAP MC SMD 50V 0.01uF K X7R 0603	MURATA	GRM188R71H103KA01D	AC	0	1.000	C151	
CAP MC SMD 50V 0.01uF K X7R 0603	SAMSUNG	CL10B103KB8NFNC	AC	100	1.000	C151	
CAP MC SMD 50V 0.01uF K X7R 0603	WALSIN	0603B103K500CT	AC	0	1.000	C151	
CAP MC SMD 50V 4700pF K X7R 0603	YAGEO	CC0603KRX7R9BB472	AD	0	1.000	C152	
CAP MC SMD 50V 4700pF K X7R 0603	TDK	C1608X7R1H472KT	AD	0	1.000	C152	
CAP MC SMD 50V 4700pF K X7R 0603	MURATA	GRM188R71H472KA01D	AD	0	1.000	C152	
CAP MC SMD 50V 4700pF K X7R 0603	SAMSUNG	CL10B472KB8NFNC	AD	100	1.000	C152	
CAP MC SMD 50V 4700pF K X7R 0603	WALSIN	0603B472K500CT	AD	0	1.000	C152	
CAP MC SMD 50V 0.047uF K X7R 0603	YAGEO	CC0603KRX7R9BB473	AE	0	1.000	C153	
CAP MC SMD 50V 0.047uF K X7R 0603	TDK	C1608X7R1H473KT	AE	0	1.000	C153	
CAP MC SMD 50V 0.047uF K X7R 0603	MURATA	GRM188R71H473KA61D	AE	0	1.000	C153	
CAP MC SMD 50V 0.047uF K X7R 0603	SAMSUNG	CL10B473KB8NFNC	AE	100	1.000	C153	
CAP MC SMD 50V 0.047uF K X7R 0603	WALSIN	0603B473K500CT	AE	0	1.000	C153	
CAP MC SMD 50V 0.1uF K X7R 0603	YAGEO	CC0603KRX7R9BB104	AF	0	1.000	C154	
CAP MC SMD 50V 0.1uF K X7R 0603	TDK	C1608X7R1H104KT	AF	0	1.000	C154	
CAP MC SMD 50V 0.1uF K X7R 0603	MURATA	GRM188R71H104KA93D	AF	100	1.000	C154	
CAP MC SMD 50V 0.1uF K X7R 0603	SAMSUNG	CL10B104KB8NFNC	AF	0	1.000	C154	
CAP MC SMD 50V 0.1uF K X7R 0603	WALSIN	0603B104K500CT	AF	0	1.000	C154	
CAP AL LD 16V 1500uF M 10*20 TP P5	RUBYCON CORPORATION	16ZLH1500MEFCT810*20	CY	0	1.000	C155	
CAP AL LD 16V 1500uF M 10*20 TP P5	NICHICON CORPORATION	UHD1C152MPD5TD	CY	100	1.000	C155	
CAP AL LD 16V 1500uF M 10*20 TP P5	RUBYCON CORPORATION	16ZLH1500MEFCT810*20	CZ	0	1.000	C156	
CAP AL LD 16V 1500uF M 10*20 TP P5	NICHICON CORPORATION	UHD1C152MPD5TD	CZ	100	1.000	C156	
CAP MC SMD 200V 1000pF K X7R 0805	YAGEO CORPORATION	CC0805KRX7RABB102	AI	0	1.000	C158	
CAP MC SMD 200V 1000pF K X7R 0805	TDK Corporation	C2012X7R2D102KT	AI	0	1.000	C158	
CAP MC SMD 200V 1000pF K X7R 0805	WALSIN TECHNOLOGY CORPORATION	0805B102K201CT	AI	100	1.000	C158	
CAP MC SMD 50V 100pF J C0G 0805	YAGEO	CC0805JRNPO9BN101	AJ	0	1.000	C159	
CAP MC SMD 50V 100pF J C0G 0805	TDK	C2012C0G1H101JT	AJ	0	1.000	C159	
CAP MC SMD 50V 100pF J C0G 0805	MURATA	GRM2165C1H101JA01D	AJ	100	1.000	C159	
CAP MC SMD 50V 100pF J C0G 0805	SAMSUNG	CL21C101JBANFNC	AJ	0	1.000	C159	
CAP MC SMD 50V 100pF J C0G 0805	WALSIN	0805N101J500CT	AJ	0	1.000	C159	
CAP MC SMD 50V 2.2uF K X7R 1206	TDK	C3216X7R1H225KT	AK	0	1.000	C160	
CAP MC SMD 50V 2.2uF K X7R 1206	MURATA	GRM31CR71H225KA88L	AK	0	1.000	C160	
CAP MC SMD 50V 2.2uF K X7R 1206	TAIYO YUDEN	UMK316B7225KL-T	AK	100	1.000	C160	
CAP MC SMD 50V 2.2uF K X7R 1206	SAMSUNG	CL31B225KBHNFNE	AK	0	1.000	C160	
CAP MC SMD 50V 0.1uF K X7R 1206	MURATA MANUFACTURING CO.LTD	GRM319R71H104KA01D	AL	0	1.000	C162	
CAP MC SMD 50V 0.1uF K X7R 1206	SAMSUNG ELECTRO-MECHANICS CO., LTD.	CL31B104KBCNFNC	AL	0	1.000	C162	
CAP MC SMD 50V 0.1uF K X7R 1206	WALSIN TECHNOLOGY CORPORATION	1206B104K500CT	AL	100	1.000	C162	
CAP MC SMD 50V 1000pF K X7R 0603	YAGEO	CC0603KRX7R9BB102	AM	0	1.000	C501	
CAP MC SMD 50V 1000pF K X7R 0603	TDK	C1608X7R1H102KT	AM	0	1.000	C501	
CAP MC SMD 50V 1000pF K X7R 0603	MURATA	GRM188R71H102KA01D	AM	100	1.000	C501	
CAP MC SMD 50V 1000pF K X7R 0603	SAMSUNG	CL10B102KB8NFNC	AM	0	1.000	C501	
CAP MC SMD 50V 1000pF K X7R 0603	WALSIN	0603B102K500CT	AM	0	1.000	C501	
CAP MC SMD 50V 0.1uF K X7R 0603	YAGEO	CC0603KRX7R9BB104	AN	0	1.000	C502	
CAP MC SMD 50V 0.1uF K X7R 0603	TDK	C1608X7R1H104KT	AN	0	1.000	C502	
CAP MC SMD 50V 0.1uF K X7R 0603	MURATA	GRM188R71H104KA93D	AN	100	1.000	C502	
CAP MC SMD 50V 0.1uF K X7R 0603	SAMSUNG	CL10B104KB8NFNC	AN	0	1.000	C502	
CAP MC SMD 50V 0.1uF K X7R 0603	WALSIN	0603B104K500CT	AN	0	1.000	C502	
CAP MC SMD 50V 0.1uF K X7R 0603	YAGEO	CC0603KRX7R9BB104	AO	0	1.000	C503	
CAP MC SMD 50V 0.1uF K X7R 0603	TDK	C1608X7R1H104KT	AO	0	1.000	C503	
CAP MC SMD 50V 0.1uF K X7R 0603	MURATA	GRM188R71H104KA93D	AO	100	1.000	C503	
CAP MC SMD 50V 0.1uF K X7R 0603	SAMSUNG	CL10B104KB8NFNC	AO	0	1.000	C503	
CAP MC SMD 50V 0.1uF K X7R 0603	WALSIN	0603B104K500CT	AO	0	1.000	C503	
CAP AL LD 50V 10uF M 5*11 TP KI5	NICHICON CORPORATION	UPW1H100MDD1TA	AP	0	1.000	C504	
CAP AL LD 50V 10UF M 5*11 TP KI5	RUBYCON CORPORATION	50YXF10MEFCTA5*11	AP	100	1.000	C504	
CAP MC SMD 50V 150pF J C0G 0603	YAGEO	CC0603JRNPO9BN151	AQ	0	1.000	C505	
CAP MC SMD 50V 150pF J C0G 0603	TDK	C1608C0G1H151JT	AQ	0	1.000	C505	
CAP MC SMD 50V 150pF J C0G 0603	MURATA	GRM1885C1H151JA01D	AQ	100	1.000	C505	
CAP MC SMD 50V 150pF J C0G 0603	SAMSUNG	CL10C151JB8NFNC	AQ	0	1.000	C505	
CAP MC SMD 50V 150pF J C0G 0603	WALSIN	0603N151J500CT	AQ	0	1.000	C505	
CAP MC SMD 50V 0.22uF K X7R 0603 0.8	YAGEO	CC0603KRX7R9BB224	AR	0	1.000	C506	
CAP MC SMD 50V 0.22uF K X7R 0603	TDK	C1608X7R1H224KT	AR	0	1.000	C506	
CAP MC SMD 50V 0.22uF K X7R 0603	MURATA	GRM188R71H224KAC4D	AR	100	1.000	C506	
CAP MC SMD 50V 0.22uF K X7R 0603 0.8	TAIYO YUDEN	UMK107B7224KA-TR	AR	0	1.000	C506	
CAP MC SMD 50V 0.22uF K X7R 0603 0.8	SAMSUNG	CL10B224KB8NFNC	AR	0	1.000	C506	
CAP MC SMD 50V 0.22uF K X7R 0603 0.8	WALSIN	0603B224K500CT	AR	0	1.000	C506	
CAP MC SMD 1KV 220pF J C0G 1206 EPOXY	HOLY STONE	C1206N221J102TX	CV	0	1.000	C507	
CAP MC SMD 1KV 220pF J C0G 1206 EPOXY	WALSIN	SH31N221J102CT	CV	100	1.000	C507	
CAP MC SMD 1KV 220pF J C0G 1206 EPOXY	HOLY STONE	C1206N221J102TX	CW	0	1.000	C508	
CAP MC SMD 1KV 220pF J C0G 1206 EPOXY	WALSIN	SH31N221J102CT	CW	100	1.000	C508	
CAP MC SMD 630V 4700pF K X7R 1206	YAGEO	CC1206KKX7RZBB472	AS	0	1.000	C509	
CAP MC SMD 630V 4700pF K X7R 1206	TDK	C3216X7R2J472KT	AS	100	1.000	C509	
CAP MC SMD 630V 4700pF K X7R 1206	MURATA	GRM31BR72J472KW01L	AS	0	1.000	C509	
CAP MC SMD 630V 4700pF K X7R 1206	SAMSUNG	CL31B472KHFNFNE	AS	0	1.000	C509	
CAP MC SMD 630V 4700pF K X7R 1206	WALSIN	1206B472K631CT	AS	0	1.000	C509	
CAP MC SMD 1KV 220pF J C0G 1206	YAGEO CORPORATION	CC1206JKNPOCBN221	AT	0	1.000	C511	
CAP MC SMD 1KV 220pF J C0G 1206	MURATA MANUFACTURING CO.LTD	GRM31A5C3A221JW01D	AT	0	1.000	C511	
CAP MC SMD 1KV 220pF J C0G 1206	WALSIN TECHNOLOGY CORPORATION	1206N221J102CT	AT	100	1.000	C511	
CAP X2 MP PC 305VAC 0.56uF K TP P15	TDK Components Pte. Ltd.	B32922C3564K289	AU	0	1.000	CX1	
CAP X2 MP PC 305VAC 0.56uF K TP P15	EUROPTRONIC (SINGAPORE) PTE LTD	MPX2564K30U15CTAD54	AU	100	1.000	CX1	
CAP Y1/X1 CD 250VAC 2200pF M E TP P10	MURATA MANUFACTURING CO.LTD	DE1E3KX222MPHAN04F	CT	0	1.000	CY1	
CAP Y1/X1 CD 250VAC 2200pF M E TP P10	KUNSHAN WANSHENG ELECTRONICS	CT7-Y1-250V-10B-E-222M10UH	CT	100	1.000	CY1	
DIO SI 1A 1KV SMA-2P SMD	GULF SEMICONDUCTOR LIMITED	GS1M-E-47L	AV	100	1.000	D1	
DIO SI 1A 1KV SMA-2P SMD	PAN JIT INTERNATIONAL INC.	GS1MH T/R	AV	0	1.000	D1	
DIO SW 200mA 250V SOD-323-2P SMD	DIODES INC.	BAV21WS-7-F	AW	0	1.000	D151	
DIO SW 250mA 250V SOD-323-2P SMD	NXP Semiconductors	BAS321	AW	0	1.000	D151	
DIO SW 200mA 250V SOD-323-2P SMD	ON Semiconductor Corporation	BAS21HT1G	AW	100	1.000	D151	
DIO SI 1A 1KV SMA-2P SMD	GULF SEMICONDUCTOR LIMITED	GS1M-E-47L	AX	100	1.000	D2	
DIO SI 1A 1KV SMA-2P SMD	PAN JIT INTERNATIONAL INC.	GS1MH T/R	AX	0	1.000	D2	
DIO SI 1A 1KV SMA-2P SMD	FAGOR ELECTRONICA, S. COOP	FS1M	AY	100	1.000	D501	
DIO SI 1A 1KV SMA-2P SMD	GULF SEMICONDUCTOR LIMITED	GS1M-E-47L	AY	0	1.000	D501	

DELTA CONFIDENTIAL

<DPS-65VB T CUSTOMER BOM PART LIST>

DATE:08/22/'20
REV:02(Model Rev:02)

DESCRIPTION	MFG NAME	MFG PART	ALT GRP	%	QPA	DESIGN NO	Item text 1
DIO SI 1A 1KV SMA-2P SMD	PAN JIT INTERNATIONAL INC.	GS1MH T/R	AY	0	1.000	D501	
DIO SW 250mA 100V SOD-323-2P SMD	NXP Semiconductors	BAS316	AZ	100	1.000	D502	
DIO SW 200mA 100V SOD-323-2P SMD	LITE-ON SEMICONDUCTOR CORP.	1N4148WS-LTL	AZ	0	1.000	D502	
DIO SW 200mA 100V SOD-323-2P SMD	ON Semiconductor Corporation	MMDL914T1G	AZ	0	1.000	D502	
DIO SI 3A 600V SMB-2P SMD	GULF SEMICONDUCTOR LIMITED	GS3J-B-E-47L			1.000	D503	
FUSE T S 2.5A 250V L TP	CONQUER ELECTRONICS CO.,LTD	MST2.5A250V	BB	0	1.000	F1	
FUSE T S 2.5A 250V L TP	Walter Electronic Co Ltd	2010T2.5A	BB	100	1.000	F1	
CORE BEAD 3.08*2.9*2.2 38ohm K081	CYNTEC CO.,LTD.	SBD323023			1.000	FB1	
	DELTA ELECTRONICS,INC.	SBD323023					
LINE FILTER T10 251uH MIN	DELTA ELECTRONICS,INC.	LFV-PCD9037			1.000	FL1	
LINE FILTER T16 11.1mH MIN	DELTA ELECTRONICS,INC.	HFV-DTD15007			1.000	FL2	
IC CONTROLLER RECTIFIER TSOP-6P SMD	NXP Semiconductors	TEA1892TS/1			1.000	IC151	
IC VOL REF ADJ 2.495V 100mA 1% SOT-23-3P	TEXAS INSTRUMENTS	TL432AIDBZR	BC	0	1.000	IC152	
IC VOL REF ADJ 2.5V 100mA 1% SOT-23-3P	DIODES INC.	AS431BNTR-G1	BC	100	1.000	IC152	
PHOTO TR 60mA 80V LSOP-4P 100%-200% SMD	EVERLIGHT ELECTRONICS CO.,LTD.	EL1013TA-VG	BD	100	1.000	IC501	
PHOTO TR 60mA 80V LSOP-4P 100%-200% SMD	VISHAY SEMICONDUCTOR	VOL617A-3X001T	BD	0	1.000	IC501	
PHOTO TR 60mA 70V LSOP-4P 100%-200% SMD	LITE-ON Technology Corp.	LTV-1004-TP1-G-DP	BD	0	1.000	IC501	
IC CONTROLLER SMPS SO-14P SMD	NXP Semiconductors	TEA18361T/1			1.000	IC502	
JUMP WIRE CU 0.6*12.5*4 NAT					1.000	J1	
JUMP WIRE CU 0.6*15*4 NAT					1.000	J2	
JUMP WIRE CU 0.6*7.5*4 NAT					1.000	J3	
RES SMD 1/10W 0ohm J 0603	YAGEO CORPORATION	RC0603JR-07 0RL	BE	100	1.000	J5	
RES SMD 1/10W 0ohm J 0603	ROYAL ELECTRONIC FTY.CO.,LTD.	0603WAJ0000T5E	BE	0	1.000	J5	
RES SMD 1/10W 0ohm J 0603	WALSIN TECHNOLOGY CORPORATION	WR06X000 PTL	BE	0	1.000	J5	
RES SMD 1/10W 0ohm J 0603	YAGEO CORPORATION	RC0603JR-07 0RL	BF	100	1.000	J7	
RES SMD 1/10W 0ohm J 0603	ROYAL ELECTRONIC FTY.CO.,LTD.	0603WAJ0000T5E	BF	0	1.000	J7	
RES SMD 1/10W 0ohm J 0603	WALSIN TECHNOLOGY CORPORATION	WR06X000 PTL	BF	0	1.000	J7	
RES SMD 1/10W 0ohm J 0603	YAGEO CORPORATION	RC0603JR-07 0RL	BG	100	1.000	J8	
RES SMD 1/10W 0ohm J 0603	ROYAL ELECTRONIC FTY.CO.,LTD.	0603WAJ0000T5E	BG	0	1.000	J8	
RES SMD 1/10W 0ohm J 0603	WALSIN TECHNOLOGY CORPORATION	WR06X000 PTL	BG	0	1.000	J8	
LED YEL-GRN 3mm GD ROUND	EVERLIGHT ELECTRONICS CO.,LTD.	264-7SYGD/S530-E2(D)	CU	100	1.000	LED151	
LED GRN 3mm GD ROUND	KINGBRIGHT ELECTRONIC CO., LTD.	L-934GD-F01	CU	0	1.000	LED151	
RES NTC 10Kohm F 3435K +/-1% SMD 0603 TP	THINKING ELECTRONIC INDUSTRIAL CO.,	TSM1A103F34D1RZ	BH	100	1.000	NTC501	
RES NTC 10Kohm F 3370K +/-1% SMD 0603 TP	MITSUBISHI MATERIALS CORPORATION	TH11-3H103FT	BH	0	1.000	NTC501	
RES NTC 10Kohm F 3380K +/-1% SMD 0603 TP	MURATA MANUFACTURING CO.LTD	NCP18XH103F03RB	BH	0	1.000	NTC501	
PWB S 0 E2 CEM-1 105.8*44.4*1.2 DPS-65VP	BRITE PLUS				1.000	PWB	
	CHIN POON						
	DRACO						
	GLORY FAITH						
	HSIANG KUO						
	KEEN RICH						
	KUNSHAN WANYUANTONG						
	SHYE FENG						
	WANNIENFU						
	WINGLUNG						
FET 100V 80A 8.6mohm PG-TO-220-3P	INFINEON TECHNOLOGIES AG	IPP086N10N3 G	CS	100	1.000	Q151	
FET 100V 100A 6.8mohm TO-220AB-3P	NXP Semiconductors	PSMN7R0-100PS	CS	0	1.000	Q151	
FET 100V 120A 6.4mohm TO-220-3P	Advanced Power Electronics Corp.	AP95T10GP-HF	CS	0	1.000	Q151	
FET 650V 11A 380mohm TO-220F-3P	INFINEON TECHNOLOGIES AG	SPA11N65C3			1.000	Q501	
RES SMD HI-VOL 1/4W 51.1Kohm F 1206	TAIWAN KAMAYA ELECTRIC CO.,LTD.	RVC32K5112FTP	BJ	100	1.000	R1	
RES SMD HI-VOL 1/4W 51.1Kohm F 1206	PHYCOMP TAIWAN LTD.	2322 791 65113L	BJ	0	1.000	R1	
RES SMD HI-VOL 1/4W 51.1Kohm F 1206	TA-I TECHNOLOGY CO.,LTD.	RH12FTN5112	BJ	0	1.000	R1	
RES SMD 1/10W 11.3Kohm F 0603	YAGEO CORPORATION	RC0603FR-07 11K3L	BK	100	1.000	R151	
RES SMD 1/10W 11.3Kohm F 0603	ROYAL ELECTRONIC FTY.CO.,LTD.	0603WAF1132T5E	BK	0	1.000	R151	
RES SMD 1/10W 11.3Kohm F 0603	WALSIN TECHNOLOGY CORPORATION	WR06X1132FTL	BK	0	1.000	R151	
RES SMD 1/10W 43.2Kohm F 0603	YAGEO CORPORATION	RC0603FR-07 43K2L	BL	100	1.000	R152	
RES SMD 1/10W 43.2Kohm F 0603	ROYAL ELECTRONIC FTY.CO.,LTD.	0603WAF4322T5E	BL	0	1.000	R152	
RES SMD 1/10W 43.2Kohm F 0603	WALSIN TECHNOLOGY CORPORATION	WR06X4322FTL	BL	0	1.000	R152	
RES SMD 1/10W 4.22Kohm F 0603	YAGEO CORPORATION	RC0603FR-07 4K22L	BM	100	1.000	R153	
RES SMD 1/10W 4.22Kohm F 0603	ROYAL ELECTRONIC FTY.CO.,LTD.	0603WAF4221T5E	BM	0	1.000	R153	
RES SMD 1/10W 4.22Kohm F 0603	WALSIN TECHNOLOGY CORPORATION	WR06X4221FTL	BM	0	1.000	R153	
RES SMD 1/10W 1.02Kohm F 0603	YAGEO CORPORATION	RC0603FR-07 1K02L	BN	100	1.000	R154	
RES SMD 1/10W 1.02Kohm F 0603	ROYAL ELECTRONIC FTY.CO.,LTD.	0603WAF1021T5E	BN	0	1.000	R154	
RES SMD 1/10W 1.02Kohm F 0603	WALSIN TECHNOLOGY CORPORATION	WR06X1021FTL	BN	0	1.000	R154	
RES SMD 1/10W 1.1Kohm F 0603	YAGEO CORPORATION	RC0603FR-07 1K1L	BO	100	1.000	R155	
RES SMD 1/10W 1.1Kohm F 0603	ROYAL ELECTRONIC FTY.CO.,LTD.	0603WAF1101T5E	BO	0	1.000	R155	
RES SMD 1/10W 1.1Kohm F 0603	WALSIN TECHNOLOGY CORPORATION	WR06X1101FTL	BO	0	1.000	R155	
RES SMD 1/10W 340ohm F 0603	YAGEO CORPORATION	RC0603FR-07 340RL	BP	100	1.000	R156	
RES SMD 1/10W 340ohm F 0603	ROYAL ELECTRONIC FTY.CO.,LTD.	0603WAF3400T5E	BP	0	1.000	R156	
RES SMD 1/10W 340ohm F 0603	WALSIN TECHNOLOGY CORPORATION	WR06X3400FTL	BP	0	1.000	R156	
RES SMD 1/10W 1.02Kohm F 0603	YAGEO CORPORATION	RC0603FR-07 1K02L	BQ	100	1.000	R157	
RES SMD 1/10W 1.02Kohm F 0603	ROYAL ELECTRONIC FTY.CO.,LTD.	0603WAF1021T5E	BQ	0	1.000	R157	
RES SMD 1/10W 1.02Kohm F 0603	WALSIN TECHNOLOGY CORPORATION	WR06X1021FTL	BQ	0	1.000	R157	
RES SMD 1/4W 100ohm J 1206	YAGEO CORPORATION	RC1206JR-07 100RL	BR	100	1.000	R158	
RES SMD 1/4W 100ohm J 1206	ROYAL ELECTRONIC FTY.CO.,LTD.	1206W4J0101T5E	BR	0	1.000	R158	
RES SMD 1/4W 100ohm J 1206	WALSIN TECHNOLOGY CORPORATION	WR12X101 JTL	BR	0	1.000	R158	
RES SMD 1/8W 1Kohm F 0805	YAGEO CORPORATION	RC0805FR-07 1KL	BS	100	1.000	R159	
RES SMD 1/8W 1Kohm F 0805	ROYAL ELECTRONIC FTY.CO.,LTD.	0805W8F1001T5E	BS	0	1.000	R159	
RES SMD 1/8W 1Kohm F 0805	WALSIN TECHNOLOGY CORPORATION	WR08X1001FTL	BS	0	1.000	R159	
RES SMD 1/8W 10ohm F 0805	YAGEO CORPORATION	RC0805FR-07 10RL	BT	100	1.000	R160	
RES SMD 1/8W 10ohm F 0805	ROYAL ELECTRONIC FTY.CO.,LTD.	0805W8F100JT5E	BT	0	1.000	R160	
RES SMD 1/8W 10ohm F 0805	WALSIN TECHNOLOGY CORPORATION	WR08X10R0FTL	BT	0	1.000	R160	
RES SMD 1/4W 0ohm J 1206	YAGEO CORPORATION	RC1206JR-07 0RL	BU	100	1.000	R161	
RES SMD 1/4W 0ohm J 1206	ROYAL ELECTRONIC FTY.CO.,LTD.	1206W4J0000T5E	BU	0	1.000	R161	
RES SMD 1/4W 0ohm J 1206	WALSIN TECHNOLOGY CORPORATION	WR12X000 PTL	BU	0	1.000	R161	
RES SMD SURGE 1/4W 1Kohm J 1206	TAIWAN KAMAYA ELECTRIC CO.,LTD.	RPC32 102 J TP	BV	0	1.000	R163	
RES SMD SURGE 1/4W 1Kohm J 1206	PHYCOMP TAIWAN LTD.	2350 550 10102L	BV	100	1.000	R163	
RES SMD SURGE 1/4W 1Kohm J 1206	WALSIN TECHNOLOGY CORPORATION	WF12S102JTL	BV	0	1.000	R163	
RES SMD 1/4W 100ohm J 1206	YAGEO CORPORATION	RC1206JR-07 100RL	BW	100	1.000	R164	
RES SMD 1/4W 100ohm J 1206	ROYAL ELECTRONIC FTY.CO.,LTD.	1206W4J0101T5E	BW	0	1.000	R164	
RES SMD 1/4W 100ohm J 1206	WALSIN TECHNOLOGY CORPORATION	WR12X101 JTL	BW	0	1.000	R164	
RES SMD 1/8W 8.2Kohm F 0805	YAGEO CORPORATION	RC0805FR-07 8K2L	BY	100	1.000	R166	
RES SMD 1/8W 8.2Kohm F 0805	ROYAL ELECTRONIC FTY.CO.,LTD.	0805W8F8201T5E	BY	0	1.000	R166	
RES SMD 1/8W 8.2Kohm F 0805	WALSIN TECHNOLOGY CORPORATION	WR08X8201FTL	BY	0	1.000	R166	
RES SMD HI-VOL 1/4W 51.1Kohm F 1206	TAIWAN KAMAYA ELECTRIC CO.,LTD.	RVC32K5112FTP	BZ	100	1.000	R2	
RES SMD HI-VOL 1/4W 51.1Kohm F 1206	PHYCOMP TAIWAN LTD.	2322 791 65113L	BZ	0	1.000	R2	
RES SMD HI-VOL 1/4W 51.1Kohm F 1206	TA-I TECHNOLOGY CO.,LTD.	RH12FTN5112	BZ	0	1.000	R2	
RES SMD HI-VOL 1/4W 120Kohm F 1206	TAIWAN KAMAYA ELECTRIC CO.,LTD.	RVC32K1203FTP	CA	0	1.000	R3	
RES SMD HI-VOL 1/4W 120Kohm F 1206	PHYCOMP TAIWAN LTD.	2322 791 61204L	CA	100	1.000	R3	
RES SMD HI-VOL 1/4W 120Kohm F 1206	TA-I TECHNOLOGY CO.,LTD.	RH12FTN1203	CA	0	1.000	R3	
RES SMD 1/10W 86.6Kohm F 0603	YAGEO CORPORATION	RC0603FR-07 86K6L	CB	100	1.000	R501	

DELTA CONFIDENTIAL

<DPS-65VB T CUSTOMER BOM PART LIST>

DATE:08/22/'20
REV:02(Model Rev:02)

DESCRIPTION	MFG NAME	MFG PART	ALT GRP	%	QPA	DESIGN NO	Item text 1
RES SMD 1/10W 86.6Kohm F 0603	ROYAL ELECTRONIC FTY.CO.,LTD.	0603WAF8662T5E	CB	0	1.000	R501	
RES SMD 1/10W 86.6Kohm F 0603	WALSIN TECHNOLOGY CORPORATION	WR06X8662FTL	CB	0	1.000	R501	
RES SMD 1/10W 16.5Kohm F 0603	YAGEO CORPORATION	RC0603FR-07 16K5L	CC	100	1.000	R502	
RES SMD 1/10W 16.5Kohm F 0603	ROYAL ELECTRONIC FTY.CO.,LTD.	0603WAF1652T5E	CC	0	1.000	R502	
RES SMD 1/10W 16.5Kohm F 0603	WALSIN TECHNOLOGY CORPORATION	WR06X1652FTL	CC	0	1.000	R502	
RES SMD 1/10W 6.19Kohm F 0603	YAGEO CORPORATION	RC0603FR-07 6K19L	CD	100	1.000	R503	
RES SMD 1/10W 6.19Kohm F 0603	ROYAL ELECTRONIC FTY.CO.,LTD.	0603WAF6191T5E	CD	0	1.000	R503	
RES SMD 1/10W 6.19Kohm F 0603	WALSIN TECHNOLOGY CORPORATION	WR06X6191FTL	CD	0	1.000	R503	
RES SMD 1/8W 37.4ohm F 0805	TA-I TECHNOLOGY CO.,	RM10FTN37R4	CE	100	1.000	R505	
RES SMD 1/8W 37.4ohm F 0805	ROYAL ELECTRONIC FTY	0805W8F374JT5E	CE	0	1.000	R505	
RES SMD 1/8W 37.4ohm F 0805	WALSIN TECHNOLOGY CO	WR08X37R4FTL	CE	0	1.000	R505	
RES SMD 1/8W 37.4ohm F 0805	TA-I TECHNOLOGY CO.,	RM10FTN37R4	CF	100	1.000	R506	
RES SMD 1/8W 37.4ohm F 0805	ROYAL ELECTRONIC FTY	0805W8F374JT5E	CF	0	1.000	R506	
RES SMD 1/8W 37.4ohm F 0805	WALSIN TECHNOLOGY CO	WR08X37R4FTL	CF	0	1.000	R506	
RES SMD 1/10W 1Kohm F 0603	YAGEO CORPORATION	RC0603FR-07 1KL	CG	100	1.000	R507	
RES SMD 1/10W 1Kohm F 0603	ROYAL ELECTRONIC FTY.CO.,LTD.	0603WAF1001T5E	CG	0	1.000	R507	
RES SMD 1/10W 1Kohm F 0603	WALSIN TECHNOLOGY CORPORATION	WR06X1001FTL	CG	0	1.000	R507	
RES SMD 1/10W 20Kohm F 0603	YAGEO CORPORATION	RC0603FR-07 20KL	CH	100	1.000	R508	
RES SMD 1/10W 20Kohm F 0603	ROYAL ELECTRONIC FTY.CO.,LTD.	0603WAF2002T5E	CH	0	1.000	R508	
RES SMD 1/10W 20Kohm F 0603	WALSIN TECHNOLOGY CORPORATION	WR06X2002FTL	CH	0	1.000	R508	
RES WW 2W 130mohm J FR W/O L TVDK P5	YAGEO CORPORATION	NKN2WSJT-PN 0R13	CI	100	1.000	R509	
RES WW 2W 130mohm J FR W/O L TVDK P5	TY-OHM ELECTRONIC WORKS CO.,LTD.	NKNP2W 0R13 JPA	CI	0	1.000	R509	
RES WW 2W 130mohm J FR W/O L TVDK P5	FUTABA ELECTRIC CO.,LTD.	NWS02JR130FTNH	CI	0	1.000	R509	
RES SMD 1/4W 0ohm J 1206	YAGEO CORPORATION	RC1206JR-07 0RL	CJ	100	1.000	R510	
RES SMD 1/4W 0ohm J 1206	ROYAL ELECTRONIC FTY.CO.,LTD.	1206W4J0000T5E	CJ	0	1.000	R510	
RES SMD 1/4W 0ohm J 1206	WALSIN TECHNOLOGY CORPORATION	WR12X000 PTL	CJ	0	1.000	R510	
RES SMD 1/4W 15ohm J 1206	YAGEO CORPORATION	RC1206JR-07 15RL	CK	100	1.000	R511	
RES SMD 1/4W 15ohm J 1206	ROYAL ELECTRONIC FTY.CO.,LTD.	1206W4J0150T5E	CK	0	1.000	R511	
RES SMD 1/4W 15ohm J 1206	WALSIN TECHNOLOGY CORPORATION	WR12X150 JTL	CK	0	1.000	R511	
RES SMD 1/4W 15ohm J 1206	YAGEO CORPORATION	RC1206JR-07 15RL	CL	100	1.000	R512	
RES SMD 1/4W 15ohm J 1206	ROYAL ELECTRONIC FTY.CO.,LTD.	1206W4J0150T5E	CL	0	1.000	R512	
RES SMD 1/4W 15ohm J 1206	WALSIN TECHNOLOGY CORPORATION	WR12X150 JTL	CL	0	1.000	R512	
RES SMD 1/4W 43Kohm F 1206	YAGEO CORPORATION	RC1206FR-07 43KL	CM	100	1.000	R513	
RES SMD 1/4W 43Kohm F 1206	ROYAL ELECTRONIC FTY.CO.,LTD.	1206W4F4302T5E	CM	0	1.000	R513	
RES SMD 1/4W 43Kohm F 1206	WALSIN TECHNOLOGY CORPORATION	WR12X4302FTL	CM	0	1.000	R513	
RES SMD 1/4W 43Kohm F 1206	YAGEO CORPORATION	RC1206FR-07 43KL	CN	100	1.000	R514	
RES SMD 1/4W 43Kohm F 1206	ROYAL ELECTRONIC FTY.CO.,LTD.	1206W4F4302T5E	CN	0	1.000	R514	
RES SMD 1/4W 43Kohm F 1206	WALSIN TECHNOLOGY CORPORATION	WR12X4302FTL	CN	0	1.000	R514	
RES SMD 1/10W 100Kohm F 0603	YAGEO CORPORATION	RC0603FR-07 100KL	CP	100	1.000	R516	
RES SMD 1/10W 100Kohm F 0603	ROYAL ELECTRONIC FTY.CO.,LTD.	0603WAF1003T5E	CP	0	1.000	R516	
RES SMD 1/10W 100Kohm F 0603	WALSIN TECHNOLOGY CORPORATION	WR06X1003FTL	CP	0	1.000	R516	
BUMPER BAKELITE V-0 3*2.25 BRN					1.000	RUBBER1	
BUMPER BAKELITE V-0 3*2.25 BRN					1.000	RUBBER2	
BUMPER BAKELITE V-0 3*2.25 BRN					1.000	RUBBER3	
BUMPER BAKELITE V-0 3*2.25 BRN					1.000	RUBBER4	
TRANSFORMER MAIN RM10 310uH +/-5%	SHENZHEN CLICK TECHNOLOGY CO.,LTD	MV-DTD14053			1.000	T501	
	DELTA ELECTRONICS,INC.	MV-DTD14053					
DIO ZEN 0.4W 9.77-10.21V SOD-323-2P SMD	NXP Semiconductors	PDZ10B	CR	100	1.000	ZD501	
DIO ZEN 0.4W 9.77-10.21V SOD-323-2P SMD	PAN JIT INTERNATIONAL INC.	PDZ10B	CR	0	1.000	ZD501	
DIO ZEN 0.4W 9.77-10.21V SOD-323F-2P SMD	DIODES INC.	D3Z10BF-7	CR	0	1.000	ZD501	

DELTA CONFIDENTIAL

REV.	Description	REV.	Description
01	PAGE 1：350207070XX change to 35020852XX 3524105300 change to 3524105301 (客户要求：PE BAG加大开孔，以便测试) 顾锋勇 12/20'17		

DELTA CONFIDENTIAL

台達電子工業股份有限公司
DELTA ELECTRONICS, INC.

Description: PML

THESE DRAWINGS AND SPECIFICATIONS ARE THE PROPERTY OF DELTA ELECTRONICS, INC. AND SHALL NOT BE REPRODUCED OR USED AS THE BASIS FOR THE MANUFACTURE OR SELL OF APPARATUSES OR DEVICES WITHOUT PERMISSION.

Part No. 3524105301 REV.

USED ON DPS-65VB T

SHEET 3 OF 3

01

FRAME NAME: DF-HTYA4V-1R01.DWG

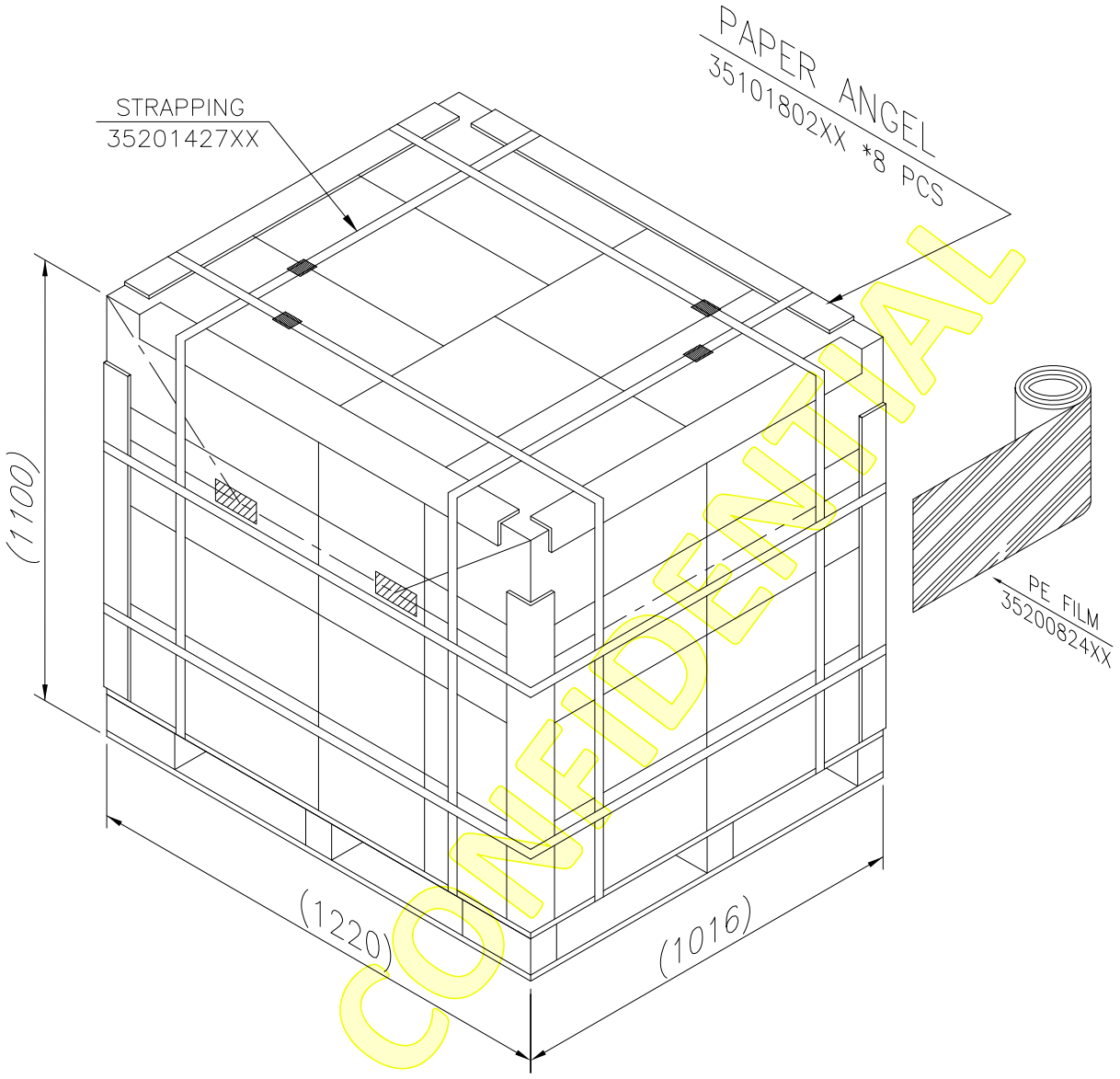

DELTA CONFIDENTIAL

NOTES:

1. TWO-WAY BANDING IS REQUIRED.
2. PLEASE WRAP AROUND THE BULK PACKING IN 3 LAYERS OF THE PE FILM (MINIMUM).

DELTA 台達電子工業股份有限公司 DELTA ELECTRONICS, INC.	Drawn: 信安興 11/10'17	Design: 顧鋒勇 11/10'17	
THESE DRAWINGS AND SPECIFICATIONS ARE THE PROPERTY OF DELTA ELECTRONICS, INC. AND SHALL NOT BE REPRODUCED OR USED AS THE BASIS FOR THE MANUFACTURE OR SELL OF APPARATUSES OR DEVICES WITHOUT PERMISSION.	THIRD ANGLE PROJECTION	Description: PML	
DIMENSIONAL TOLERANCES ( ) <30 : ±0.25 >30~100 : ±0.35 >100~300 : ±0.5 ABOVE 300 : ±0.6 ( ) DECIMALS X : ±0.3 X.X : ±0.2 X.XX : ±0.1 ( ) UP~100 : ±0.2 100~150 : ±0.25 150~200 : ±0.3 200~250 : ±0.35 HOLES : ±0.05 ANGLES : ±0.5° 250~300 : ±0.4 300~350 : ±0.45 350~400 : ±0.5 ( ) UP~600 : ±1.5 600~900 : ±2.4 900~OVER : ±3.1	A4 SIZE	Part No. 3524105301	REV. 01
SCALE	UNIT MM	USED ON DPS-65VB T	SHEET 2 OF 3 ISSUE DATE: 11/10'17

FRAME NAME: DF-MEA4V-1R01.DWG

DPS-65VB T PACKING SPEC.

33 PCS/CARTON *7 CARTONS/LAYER

*4 LAYERS/PALLET = 924 PCS/PALLET

NOTES :

1. MATERIALS :
   - CARTON : CD-3,BC
   - PARTITION : CD-3,BC
   - EPE SHEET : ANTI-STATIC
   - PAPER PAD : CD-3,BC
   - PE SHEET : PE POLYETHYLENE

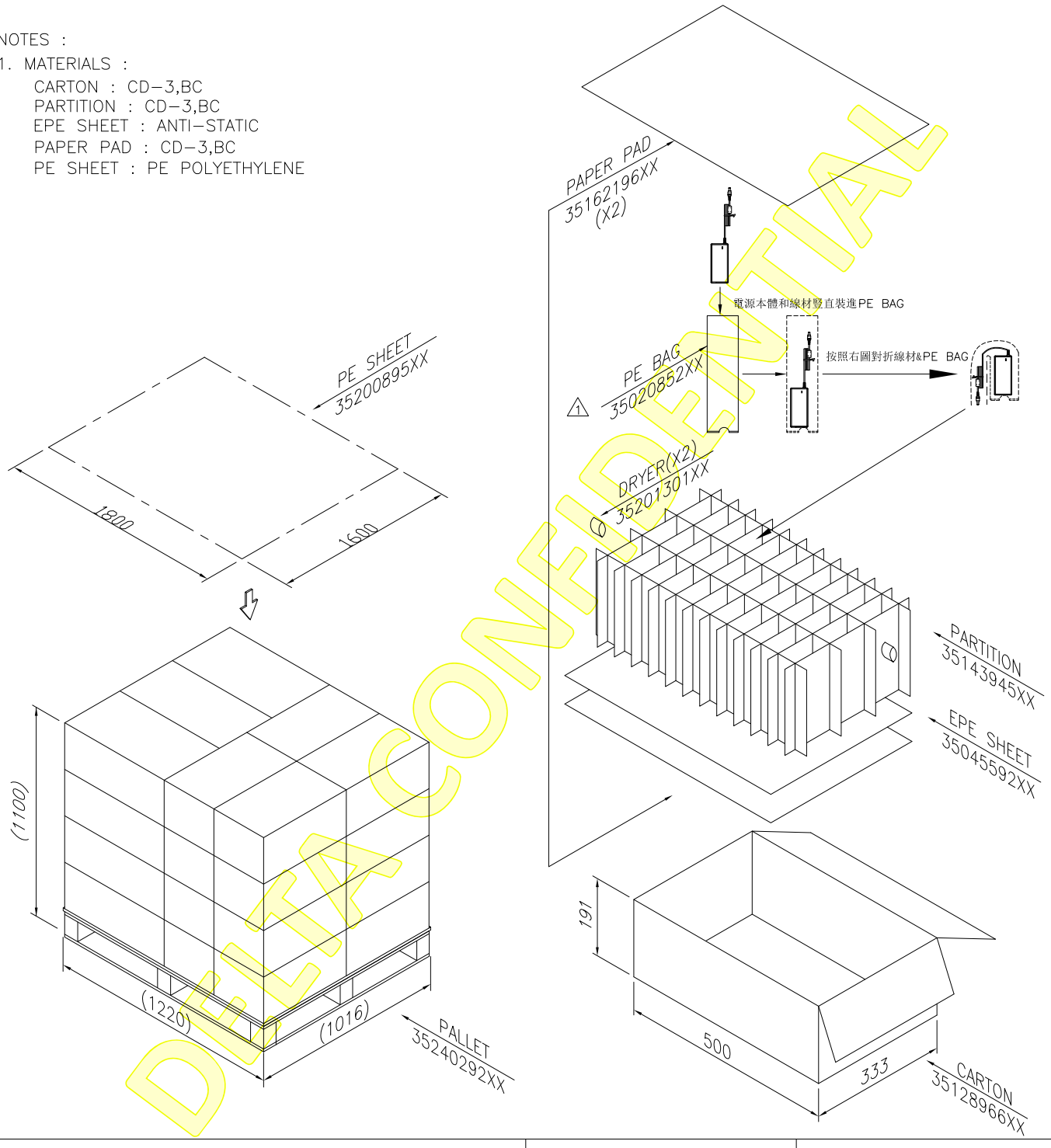

DELTA CONFIDENTIAL

台達電子工業股份有限公司 DELTA ELECTRONICS, INC.	Drawn: 信安興 11/10'17	Design: 顧鋒勇 11/10'17
THESE DRAWINGS AND SPECIFICATIONS ARE THE PROPERTY OF DELTA ELECTRONICS, INC. AND SHALL NOT BE REPRODUCED OR USED AS THE BASIS FOR THE MANUFACTURE OR SELL OF APPARATUSES OR DEVICES WITHOUT PERMISSION.	THIRD ANGLE PROJECTION	Description: PML
DIMENSIONAL TOLERANCES ( ) <30 : ±0.25 >30~100 : ±0.35 >100~300 : ±0.5 ABOVE 300 : ±0.6 ( ) DECIMALS X : ±0.3 X.X : ±0.2 X.XX : ±0.1 ( ) UP~100 : ±0.2 100~150 : ±0.25 150~200 : ±0.3 200~250 : ±0.35 250~300 : ±0.4 300~350 : ±0.45 350~400 : ±0.5 ( ) UP~600 : ±1.5 600~900 : ±2.4 900~OVER : ±3.1 HOLES : ±0.05 ANGLES : ±0.5°	A4 SIZE	Part No. 3524105301 REV. 01
SCALE	UNIT MM	USED ON DPS-65VB T
	SHEET 1 OF 3	ISSUE DATE: 11/10'17

FRAME NAME: DF-MEA4V-1R01.DWG

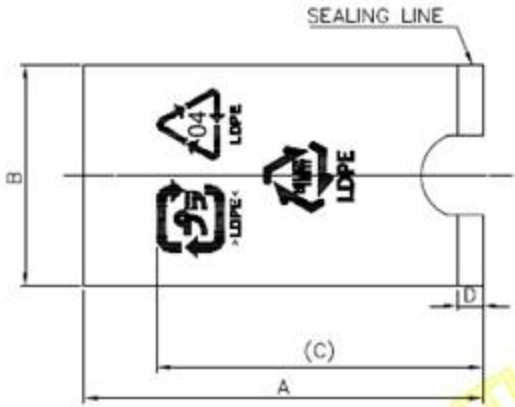

DIMENSION					PE BAG COLOR	RECYCLED MARK COLOR
A	B	C	D	T		
500	150	120	12	0.06	CLEAR	BLACK

DELTA CONFIDENTIAL

台達電子工業股份有限公司
DELTA ELECTRONICS, INC.

Drawn: James 07/25'17

Design: James 07/25'17

THESE DRAWINGS AND SPECIFICATIONS ARE THE PROPERTY OF DELTA ELECTRONICS, INC. AND SHALL NOT BE REPRODUCED OR USED AS THE BASIS FOR THE MANUFACTURE OR SELL OF APPARATUSES OR DEVICES WITHOUT PERMISSION.

THIRD ANGLE PROJECTION

Description: BAG

DIMENSIONAL TOLERANCES

[ ]		[ ]		[ ]				[ ]	
<30	±0.25	DECIMALS		UP~100	±0.1	250~300	±0.4	UP~600	±1.5
>30~100	±0.30	X	±0.3	100~150	±0.25	300~350	±0.45	600~900	±0.4
>100~300	±0.5	X.X	±0.1	150~200	±0.3	350~400	±0.5	900~OVER	±0.1
ABOVE 300	±0.6	X.XX	±0.1	200~250	±0.35				

A4 SIZE

Part No. 35020707XX

REV. XX

SCALE	–	UNIT	mm	USED ON	ADP-65JH HBBK

SHEET 1 OF 1

ISSUE DATE: 07/25'17

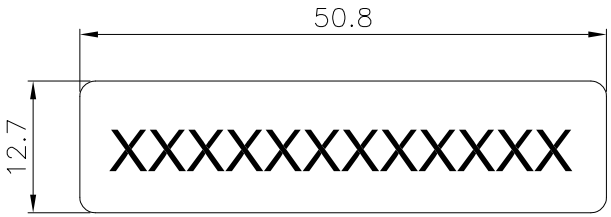

Qisda PE bag label
P/N: 32020017XX(2/1)

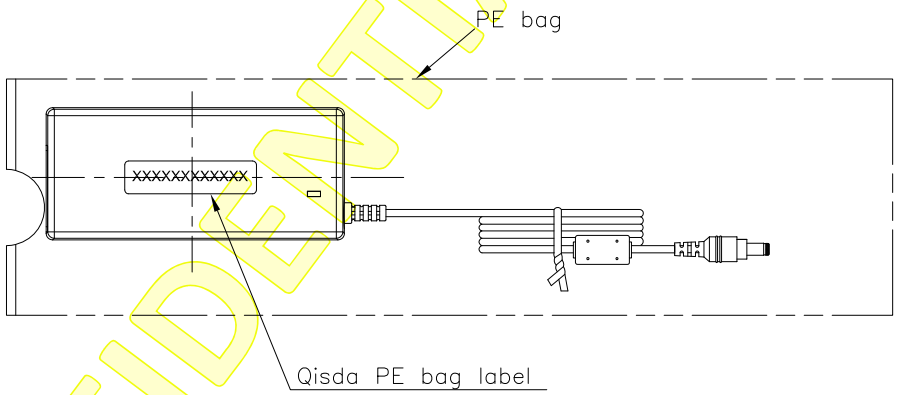

XXXXXXXXXXXX

Qisda P/N,FOR DPS-65VB T: 2E.A125D.W18

PE bag label 粘貼示意圖

1. THERMO-TRANSFER MACHING WORDS:ARIAL
2. 所有文字,安規標識以及其他重要商標周邊不可有明顯毛刺.
（除有毛刺特別要求處外,其他毛刺高度不可大於0.03mm)
3. 以L*a*b色空間表示的色差 ΔE*ab必須小於1
（比對Label spec 或通用規范中的色碼要求）

DELTA CONFIDENTIAL

台達電子工業股份有限公司 DELTA ELECTRONICS, INC.	Drawn: 信安興 10/14'17	Design: 顧鋒勇 10/14'17	
THESE DRAWINGS AND SPECIFICATIONS ARE THE PROPERTY OF DELTA ELECTRONICS, INC. AND SHALL NOT BE REPRODUCED OR USED AS THE BASIS FOR THE MANUFACTURE OR SELL OF APPARATUSES OR DEVICES WITHOUT PERMISSION.	THIRD ANGLE PROJECTION	Description: PE bag label	
DIMENSIONAL TOLERANCES ( ) <30 :±0.25 >30~100 :±0.35 >100~300 :±0.5 ABOVE 300 :±0.6 ( ) DECIMALS X :±0.3 X.X :±0.2 X.XX :±0.1 ( ) UP~100 :±0.2 100~150 :±0.25 150~200 :±0.3 200~250 :±0.35 250~300 :±0.4 300~350 :±0.45 350~400 :±0.5 ( ) UP~600 :±1.5 600~900 :±2.4 900~OVER :±3.1 HOLES :±0.05 ANGLES :±0.5°	A3 SIZE	Part No. DPS-65VB T	REV. P04
SCALE NS UNIT MM USED ON DPS-65VB T		SHEET 1 OF 1	ISSUE DATE:10/14'17

FRAME NAME: DF-MEA3H-1R01.DWG

東莞衡隆電業有限公司
EVERLONG ELECTRIC (DONG GUAN) CO.,LTD

APPROVED	CHECKED	DESIGN
7/20	7/20	7/20

Product Specification

Date : 2009-07-20

1.Construction & Material :

Item		Unit	Specification
		Style	1571
Conductor	Size	AWG	17
	Number	C	1
	Material	-	Tinned copper
	Construction	pcs / mm	92/0.12 ± 0.008
	Diameter	mm	1.33
Insulation	Material	-	PVC
	Thickness	mm	0.38
	Diameter	- mm	2.10 ± 0.10
	Color	-	White
Spiral	Material	-	Tinned copper
	Size	pcs / mm	82±2/0.12 ± 0.008
Inner Jacket	Material	-	PVC
	Thickness	mm	0.43
	Diameter	mm	3.20 ± 0.10
	Color	-	White
Jacket	Material	-	PVC(70A/80P)
	Thickness	mm	0.34
	Diameter	mm	4.00 ± 0.10
	Color	-	Black(Semi-Matt.)
	Marking	E323326 ℻ AWM STYLE 1571 17AWG VW-1 80℃ 30V c ℻ AWM I/II A 80℃ 30V FT1 -F- JACKET LF EVERLONG	
	Marking Color	White	

2.Electrical & Physical Properties :

Item		Unit	Specification	Standard
Conductor Resistance		MAX. Ω /K M	At 20℃	Max. 18.30
Insulation Resistance		MAX. Ω/K M	At 20℃	Min. 0.75
Dielectric Withstand		VAC/Min.	500	No Breaking
Spark Test		KV/Sec.	1.50	No Breaking
Flame Test		VW-1		PASS
Heat shock test		121 ± 1 ℃ / 1HR		No Cracking
Cold bend test		-10 ± 2 ℃ / 4HRS		No Cracking
Unaged	Tensile Strength	Insulation		Jacket
		Min. 1500 PSI		Min. 1500 PSI
	Elongation	Min. 100 %		Min. 100 %
Aged	Tensile Strength	Min. 70 %		Min. 70 %
	Elongation	Min. 65 %		Min. 65 %
Deformation test		Max. 50 %		

3.Requirement for EVERLONG EL-008-00

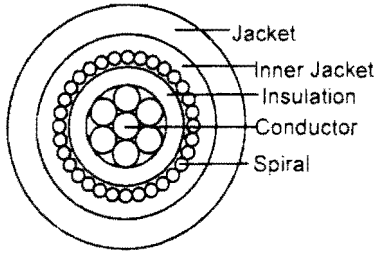

RD090555

REV.	Description	REV.	Description
P01	(3~6，A~C) LABEL改為與DPS-65VB B的形式一致 (3~6，A~C) DEL. NOM MARK (3~6，A~C) UPDATE PSE COC (客戶要求) 顧鋒勇 08/07'17		
P02	(1~2,A) Update BSMI Rohs mark ADD NOM & PSB mark (1~2,A) Model rev：00 change to rev：01 (安規要求) 顧鋒勇 11/09'17		
P03	(2,E) 固定S/N的前三碼：IKF (客戶要求) 顧鋒勇 01/06'18		
P04	(4~5,B) ADD NOM-029 & 烏克蘭mark (4~5,B) Update CCC & PSB mark (4,C) Model rev：01 change to rev：02 (客戶要求) 顧鋒勇 09/01'18		
P05	(4~5,B) Update BIS mark 32688703XX was 32687774XX (安規要求) 顧鋒勇 09/28'18		
P06	(4,C) MODEL REV.02 CHANGE TO REV.03 (導入62368) 黃曉明 11/25'19		
P07	(3~4,B)OUTPUT "12V ⎓ /5.417A Max." CHANGE TO "12.0V ⎓ /5.417A Max. 65.0W " PSE IMPORTER CHANGE:"デルタ電子株式会社" CHANGE TO 株式会社ワコム" (4,C) UPDATE TUV-GS MARK (4,C) MODEL REV.03 CHANGE TO REV.04 (4~5,C) P/N:32688703XX Change to P/N:32647172XX (安規要求&客戶要求) 黃曉明 02/19'20		
P08	(6,C) ADD UAE SAFETY MARK MODEL REV.04 CHANGE TO REV.05 (客戶要求) 黃曉明 07/23'20		
P09	(5,B~C) UPDATE UAE SAFETY MARK (7,D)定义UAE MARK最小尺寸為15MM*30MM要求 (安規要求) 黃曉明 08/19'20		
P10	(6,B) ADD UKCA SAFETY MARK (6,B) RCM MARK增加授權碼"ULL-101754-EA" MODEL REV.05 CHANGE TO REV.06 (客戶要求&安規要求) 黃曉明 03/03'21		
P11	UPDATE DELTA LOGO UPDATE FCC MARK, ADD "CAN ICES-3(B) / NMB-3(B)" MODEL REV.06 CHANGE TO REV.07 (安規要求) 黃曉明 11/19'21		

DELTA CONFIDENTIAL

台達電子工業股份有限公司
DELTA ELECTRONICS, INC.

Description: LABEL PRINT FORMAT

THESE DRAWINGS AND SPECIFICATIONS ARE THE PROPERTY OF DELTA ELECTRONICS, INC. AND SHALL NOT BE REPRODUCED OR USED AS THE BASIS FOR THE MANUFACTURE OR SELL OF APPARATUSES OR DEVICES WITHOUT PERMISSION.

Part No. DPS-65VB T REV.

USED ON DPS-65VB T P11

SHEET 2 OF 2

FRAME NAME: DF-HTYA4V-1R01.DWG



11

11

SPEC. LABEL

P/N:32648037XX(2/1)

DELTA CONFIDENTIAL

IKF D YY WW ZZZZZZ

- # 6 CODE S/N
- # 2 CODE WEEK
- # 2 CODE YEAR
- # 1 CODE
  DELTA MANUFACTURING SITES
  C=DELTA TAIWAN,
  D=DELTA CHINA, (DONG GUAN)
  T=THAILAND,
  M=MEXICO,
  P=DELTA CHINA, (CHUNG QUAN)
  S=SCOTTISH,
- # 3 CODE FOR DELTA MODEL，該機種前三碼固定為：IKF 12

NOTES:

1. CODE: USE CODE 39
2. 列印針數須使用2針以上
3. 須使用300dpi 解析度
4. Barcode Ratio: 2.0; Height: 5mm

NOTES:

a.英文字型: ARIAL

b.簡體中文字型: 微軟雅黑體

d.繁體中文字型: 微軟正黑體

1. MATERIAL:

WHITE POLYESTER	☐T=0.05mm	☒T=0.075mm
SLIVER POLYESTER	☐T=0.05mm	☐T=0.075mm
PET COATING	☒T=0.025mm	☐T=0.05mm
BACK ADHESIVE	☐平面膠 K.K No.9	☒壓花背膠

2. BACKGROUND'S COLOR: BLACK. (UNLESS OTHERWISE SPECIFIED)
   WORD'S COLOR: WHITE. (UNLESS OTHERWISE SPECIFIED)
3. LABEL CAN BE HOT-STAMP BY THERMO-TRANSFER MATCHING.
4. LABEL MUST BE SUITABLE FOR PC, PPO CASE.
5. LABEL MUST BE DIE CUT PROPERLY AS PER DIMENSION.
6. LABEL MUST BE UL RECOGNIZED AND CSA CERTIFIED.
7. MARK CSA APPROVED VENDOR CODE.
8. THE LABEL IS SUPPOSED TO BE PASTED ON PC CASE EVENLY AND PROPERLY. IT'S NOT ALLOWED TO HAVE ANY BULGE HAPPEEN ON THE LABEL AFTER BE BURNT IN 72 HRS IN OVEN WHICH TEMPERATURE IS 85°C.
9. DIMENSIONS MARKED * MARK MUST BE INSPECTED AND CONTROLLED STRICTLY BY IQC.
10. LABEL MUST MEET DELTA GENERAL SPEC: 10000-0085, 10000-0162

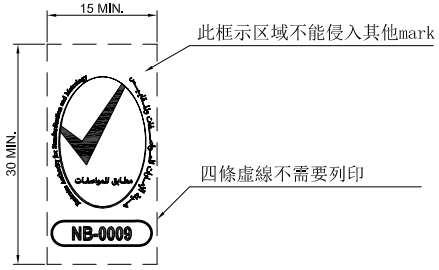

NOTES:
可以等比例縮放，長寬尺寸比例需要保證1:2



UAE（列印效果圖）

SCALE 2:1







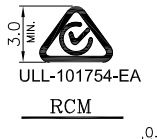





SCALE 1.5/1

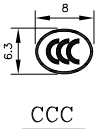

NOTES:
THE COLOR OF CCC MARK IS WHITE

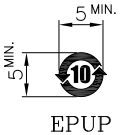

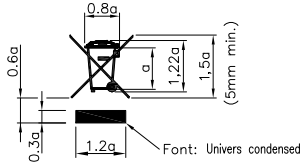

Where distance "a" is equal or great than 3.3333mm

WEEE MARK

台達電子工業股份有限公司 DELTA ELECTRONICS, INC.		Drawn: 賀司賢 11/04'16	Design: 李澤丹 11/04'16
THESE DRAWINGS AND SPECIFICATIONS ARE THE PROPERTY OF DELTA ELECTRONICS, INC. AND SHALL NOT BE REPRODUCED OR USED AS THE BASIS FOR THE MANUFACTURE OR SELL OF APPARATUSES OR DEVICES WITHOUT PERMISSION.		THIRD ANGLE PROJECTION	Description: LABEL PRINT FORMAT
DIMENSIONAL TOLERANCES HOLES : ±0.05 ANGLES : ±0.5°		A2 SIZE	Part No. DPS-65VB T
SCALE	UNIT MM	USED ON DPS-65VB T	SHEET 1 OF 2 ISSUE DATE: 11/04'16

REV. P11

FRAME NAME: DF-MEA2H-1R01.DWG

REV.	Description	REV.	Description
01	(2,A) Add DIM. 29.5 / 72.8 (客戶要求：增加尺寸定義) 顧鋒勇 11/23'18		
02	(2,A) DIM.72.8增加"*"重點尺寸管控 (8,A) DIM.19.4增加"*"重點尺寸管控 (客戶要求) 鄧勇芳 12/20'18		

DELTA CONFIDENTIAL

台達電子工業股份有限公司
DELTA ELECTRONICS, INC.

Description: POWER CORD

THESE DRAWINGS AND SPECIFICATIONS ARE THE PROPERTY OF DELTA ELECTRONICS, INC. AND SHALL NOT BE REPRODUCED OR USED AS THE BASIS FOR THE MANUFACTURE OR SELL OF APPARATUSES OR DEVICES WITHOUT PERMISSION.

Part No. 3082228100 REV. 02

USED ON DPS-65VB T

SHEET 2 OF 2

FRAME NAME: DF-HTYA4V-1R01.DWG

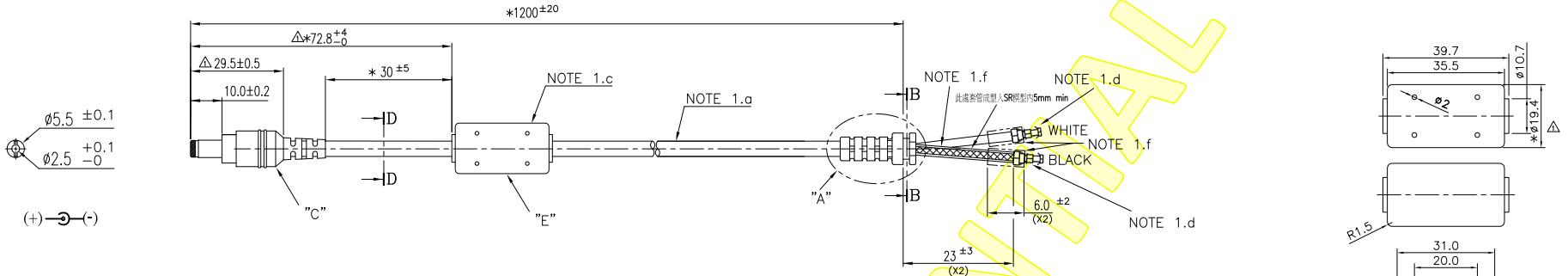

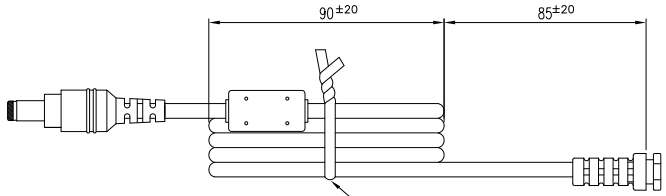

CABLE TIE WITH STEEL WIRE
PET OR PE PLATED. COLOR:BLACK.

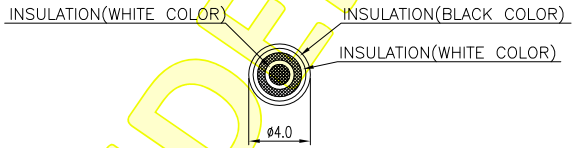

SECTION D−D
SCALE 2/1

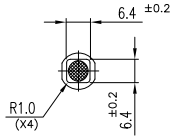

SECTION B−B

DETAIL "E"

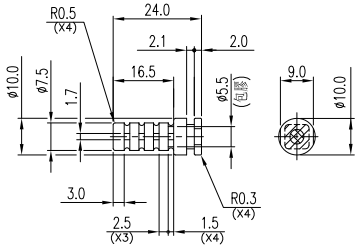

DETAIL "A"
SCALE FREE

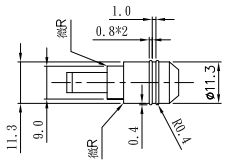

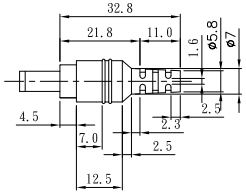

DETAIL "C"



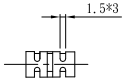

NOTES:
1. MATERIAL:
   a. WIRE:
      PVC WIRE: UL 1571 (DOUBLE INSULATOR) #17 AWG, TIN PLATED WIRE, ø0.12x92c.
      SHIELD WIRE: TIN PLATED WIRE, ø0.12x82c SPIRAL 80% MIN.
      CABLE COLOR: BLACK. HARDNESS: SHORE A65~75.
   b. PLUG:
      VENDOR: HUANGJI, P/N: 5525TVM230−1T00−04.
   c. CORE:
      VENDER: KING CORE K5B RH 14.2X28.5X6.35 OR EQUIVALENT.
   d. TERMINAL: 3040104734x1 (#17 AWG, TIN PLATED WIRE, ø0.12x92c), PCB HOLE:ø2.4
      3040061500x1 (SHIELD WIRE, TIN PLATED WIRE, ø0.12x82c SPIRAL), PCB HOLE:ø2.0
   e. MOLDING & HARDNESS:

PLUG'S INNER MOLDING		PP OR PVC
CORE'S OVERMOLD	A85~90	PVC
STRAIN RELIEF	A80~85	PVC
PLUG OVERMOLD	A80~85	PVC

   COLOR: SAME AS CABLE.
   f. HEAT SHRINKABLE TUBE: MUST BE DELTA APPROVE SOURCE.
   g. CABLE ASS'Y MUST BE MEET DELTA GENERAL SPEC.:10000−0162 AND 10000−0010.
      10000−0038 AND 10000−0031.
*2. RESISTANCE: MUST MEET DELTA GENERAL SPEC. 10000−0010
3. CONDUCTOR & PVC JACKET MUST BE MADE BY APPROVED VENDOR WITH UL,CSA.
4. PLUG'S INSULATOR MUST BE WITHSTAND 80°C MIN.
   IT CAN'T GET FISSURE AFTER BURN IN.
5. CRIMPING CABLE TERMINAL SHALL BE BRASS WITH TIN PLATED , TENSILE
   STRENGTH SHALL BE 1.5kg/1min(min.).
6. CHARACTERISTICS AND TEST METHOD:MUST MEET DELTA GENERAL SPEC. 10000−0010&10000−025804 ITEM 3.4.3
7. POWER CORD MUST BE APPROVED BY DESIGN ENGINEER.
8. DIMENSIONS WITH * MARK MUST BE INSPECTED AND CONTROLED STRICTLY BY IQC.

DELTA CONFIDENTIAL

台達電子工業股份有限公司
DELTA ELECTRONICS, INC.

Drawn: 賀司賢 11/02'16
Design: 李澤丹 11/02'16

THESE DRAWINGS AND SPECIFICATIONS ARE THE PROPERTY OF DELTA ELECTRONICS, INC. AND SHALL NOT BE REPRODUCED OR USED AS THE BASIS FOR THE MANUFACTURE OR SELL OF APPARATUSES OR DEVICES WITHOUT PERMISSION.

THIRD ANGLE PROJECTION

Description: POWER CORD

DIMENSIONAL TOLERANCES
HOLES : ±0.05 ANGLES : ±0.5°
(√) : ±0.25 | ( ) : ±0.25 | ( ) : ±0.25
<30 : ±0.25 | DECIMALS | UP~100 : ±0.2 | 250~300 : ±0.4 | UP~600 : ±1.5
>30~100 : ±0.35 | X : ±0.3 | 100~150 : ±0.25 | 300~350 : ±0.45 | 600~900 : ±2.4
>100~300 : ±0.5 | X.X : ±0.2 | 150~200 : ±0.3 | 350~400 : ±0.5 | 900~OVER : ±3.1
ABOVE 300 : ±0.8 | X.XX : ±0.1 | 200~250 : ±0.35

A2 SIZE

Part No. 3082228100
REV. 02

SCALE | UNIT | MM | USED ON | DPS−65VB T

SHEET 1 OF 2 | ISSUE DATE: 11/02'16

FRAME NAME: DF-MEA2H-1R01.DWG