AUO Display+

AUO Display Plus Corporation

Engineering Change Notice

Document No:	GDALL-ALL-ALL-3041
Product Type:	ALL
Model Name:	ALL
Issued Date:	2022/09/30

Requested by

Signature	吳妤婷 莊馥綺
Date	2022/10/03
Name	吳妤婷 莊馥綺
Title	行銷三部

1. Purpose

AUO is expanding its business and in an effort to clearly convey its expansion as a company, and AUO will be changing their company name from “AU Optronics Corp.” to “AUO Corporation”. Please note this change shall not impact our ongoing cooperation and any agreements we have with your company. According to this change, product label need to be updated.

2. Changes

According to this change, product label need to be updated.
Change item:
(1) Shipping / Carton / Pallet label
(2) Logo on the top of Carton

Figure :

3. Desired Implementation Method & Date

2022/11/04 ; RUNNING CHANGE ;

4. Attachment

Customer (ACMEPOINT) Feedback

Disposition
【 】Agree
【 】Disagree,Comment:

Note: Please kindly reply to ADP within 14 calendar days upon receipt. This ECR will be regarded as "Agree" if ADP does not receive feedback within 14 calendar days.

Agreed by:

Signature	_____
Date	_____
Name	_____
Title	_____

開發部
2023.06.27
發行
益鎵科技開發股份有限公司

AUO Confidential

□ **Preliminary Specification**
■ **Final Specification**

Module	24.0” Color TFT-LCD
Model Name	G240HW01 V1 3TFTLCD24DC(T0074)

G240HW01 V1 (1.4)

Company	DIVA Lab	**Approved by**	Elsie Kuo
		Date	2023/06/21
Checked & Approved by	Shinichi	**Prepared by**	Felix Lee
Date	2023.10.16		2023/06/21

設計驗證
工程課
2024-04-16
發行
鈺鐸科技開發股份有限公司

General Display Business Unit /
AUO Display Plus Corporation

© AUO Display Plus Corporation Proprietary

Contents

1. Operating Precautions 5
2. General Description 6
2.1 Display Characteristics 6
2.2 Optical Characteristics 7
3. Functional Block Diagram 10
4. Absolute Maximum Ratings 11
4.1 TFT LCD Module 11
4.2 Backlight Unit 11
4.3 Absolute Ratings of Environment 11
5. Electrical Characteristics 12
5.1 TFT LCD Module 12
5.2 Backlight Unit 14
6. Signal Characteristic 15
6.1 Pixel Format Image 15
6.2 Signal Description 16
6.3 The Input Data Format 17
6.4 Interface Timing 18
6.5 Power ON/OFF Sequence 19
7. Connector & Pin Assignment 20
7.1 TFT LCD Module: LVDS Connector 20
7.2 Backlight Unit: LED Connector 21
8. Reliability Test 22
9. Mechanical Characteristics 23
10. Label and Packaging 24
10.1 Shipping Label (on the rear side of TFT-LCD display) 24
10.2 Carton Package 24
11. Safety 25
11.1 Sharp Edge Requirements 25
11.2 Materials 25
11.3 Capacitors 25
11.4 National Test Lab Requirement 25

© AUO Display Plus Corporation Proprietary

Record of Revision

Version and Date	Page	Old description	New Description	Remark
0.1 2015/03/23	All	First Edition for Customer	All	
0.2 2015/12/28	5,6	Brigntness: 250 nits (Typ.)	Brigntness: 300 nits (Typ.)	
	13	Operating Life ↵ 30000	LTLED ↵ LED Life Time ↵ 30,000	
0.3 2016/02/02	5	Temperature Range ↵ Operating ↵ Storage (Shipping) ↵ [°C] ↵ [°C] ↵ 0 to +50 ↵ -20 to +60	Temperature Range ↵ Operating ↵ Storage (Shipping) ↵ [°C] ↵ [°C] ↵ -20 to +70 ↵ -30 to +80	
	10	Item / Symbol / Min. / Max. / Unit Operating Temperature / TOP / 0 / +50 / [°C] Operation Humidity / HOP / 5 / 90 / [%RH] Storage Temperature / TST / -20 / +60 / [°C] Storage Humidity / HST / 5 / 90 / [%RH]	Item / Symbol / Min. / Max. Operating Temperature / TOP / -20 / 70 Operation Humidity / HOP / 5 / 90 Storage Temperature / TST / -30 / 80 Storage Humidity / HST / 5 / 90	
	13	Symbol / Parameter / Min / Typ / Max / Unit / Remark Vcc / Input Voltage / 10.8 / 12 / 13.2 / Volt / Ivcc / Input Current / -- / TBD / -- / A / 100% Dimming PLED / Power Consumption / -- / TBD / -- / Watt / 100% Dimming, Note3 FPWM / PWM Dimming Frequency / 200 / -- / 20k / Hz / -- / Swing Voltage / 3.0 / 3.3 / 5 / Volt / -- / Dimming Duty Cycle / 10 / -- / 100 / % / Vanalog / Analog Dimming Voltage / -- / N/A / -- / -- / No Analog Dimming Ir / LED Forward Current / -- / TBD / -- / mA / Ta = 25°C LTLED / LED Life Time / 30,000 / -- / -- / Hrs / Note 4	Symbol / Parameter / Min / Typ / Max / Units / Remark Vcc / Input Voltage / 10.8 / 12 / 13.2 / Volt / Ivcc / Input Current / -- / TBD / -- / A / 100% Dimming PLED / Power Consumption / -- / TBD / -- / Watt / 100% Dimming Irush / Inrush Current / -- / 4 / 5 / A / BL_EN / On Control Voltage / 3 / -- / 5.5 / Volt / BL_EN / Off Control Voltage / 0 / -- / 0.5 / Volt / FPWM / PWM Dimming Frequency / 200 / -- / 20K / Hz / FPWM / High Voltage / 3.0 / 3.3 / 5.5 / Volt / FPWM / Low Voltage / 0 / -- / 0.5 / Volt / FPWM / Dimming Duty Cycle / 10 / -- / 100 / % / Ir / LED Forward Current / -- / 60 / -- / mA / Ta = 25°C LTLED / LED Life Time / 30,000 / -- / -- / Hrs / Note 4	
	20	8 ↵ BL_EN ↵ Back light enable, 5V 9 ↵ BL_DIM_P ↵ Back light dimming, 3.3V or 5V	8 ↵ BL_EN ↵ Back light enable, 3~5.5 V 9 ↵ BL_DIM_P ↵ Back light dimming, 3~5.5 V	
	21	old reliability test conditions	upgrade reliability test conditions	
	23	10.2 Carton Package • The outside dimension of carton is 412 x 261x 650 (mm). • 8 pieces per carton box. • 2*4 boxes per layer. By air, 2 layer / pallet. By sea, refer packing documents. Pallet size (not include carton boxes): 1140 mm * 830 mm * 140 mm	10.2 Carton Package • The outside dimension of carton is 413 x 282x 661 (mm). • 8 pieces per carton box. • 2*4 boxes per layer. By air, 2 layer / pallet. By sea, refer packing documents. Pallet size (not include carton boxes): 1150 mm * 840 mm * 132 mm	
1.0 2017/04/07	5	Power Consumption / [Watt] / TBD Weight / [g] / 2130 (typical)	Power Consumption / [Watt] / 23.3 (max) (Cell: 6 + BL: 17.3) Weight / [g] / 2,130 (Typ.)+/-213 g	
	6	Item / Unit / Conditions / Min. / Typ. / Max. White Luminance / [cd/m2] / Ir= 100mA / 240 / 300 / -- Uniformity / % / 9 Points / 75 / 80 / -- Contrast Ratio / / / 3000 / 5000 / -- Cross talk / % / / -- / -- / 1.5 Response Time / [msec] / Rising / -- / 16 / -- Response Time / [msec] / Falling / -- / 9 / -- Response Time / [msec] / Rising + Falling / -- / 25 / --	Item / Unit / Conditions / Min. / Typ. / Max. White Luminance / [cd/m2] / Ir= 45 mA / 240 / 300 / -- Uniformity / % / 9 Points / 75 / 80 / -- Contrast Ratio / / / 3000 / 5000 / -- Cross talk / % / / -- / -- / 1.5 Response Time / [msec] / Rising / -- / 16 / -- Response Time / [msec] / Falling / -- / 9 / -- Response Time / [msec] / Rising + Falling / -- / 25 / 50	
	10	4.1 TFT LCD Module Item / Symbol / Min / Max / Unit / Conditions Logic/LCD Drive Voltage / VDD / 0 / 6.0 / [Volt] / Note 1,2	4.1 TFT LCD Module Item / Symbol / Min / Max / Unit / Conditions Logic/LCD Drive Voltage / VDD / 0 / 5.5 / [Volt] / Note 1,2	
	13	Symbol / Parameter / Min / Typ / Max / Units / Remark Vcc / Input Voltage / 10.8 / 12 / 13.2 / Volt / Ivcc / Input Current / -- / TBD / -- / A / 100% Dimming PLED / Power Consumption / -- / TBD / -- / Watt / 100% Dimming Irush / Inrush Current / -- / 4 / 5 / A / BL_EN / On Control Voltage / 3 / -- / 5.5 / Volt / BL_EN / Off Control Voltage / 0 / -- / 0.5 / Volt / FPWM / PWM Dimming Frequency / 200 / -- / 20K / Hz / FPWM / High Voltage / 3.0 / 3.3 / 5.5 / Volt / FPWM / Low Voltage / 0 / -- / 0.5 / Volt / FPWM / Dimming Duty Cycle / 10 / -- / 100 / % / Ir / LED Forward Current / -- / 60 / -- / mA / Ta = 25°C LTLED / LED Life Time / 30,000 / -- / -- / Hrs / Note 4	Symbol / Parameter / Min / Typ / Max / Units / Remark Vcc / Input Voltage / 10.8 / 12 / 13.2 / Volt / Ivcc / Input Current / -- / 1.2 / -- / A / 100% Dimming PLED / Power Consumption / -- / 14.4 / 17.3 / Watt / 100% Dimming Irush / Inrush Current / -- / 4 / 5 / A / BL_EN / On Control Voltage / 3 / -- / 5.5 / Volt / BL_EN / Off Control Voltage / 0 / -- / 0.5 / Volt / FPWM / PWM Dimming Frequency / 200 / -- / 20K / Hz / FPWM / High Voltage / 3.0 / 3.3 / 5.5 / Volt / FPWM / Low Voltage / 0 / -- / 0.5 / Volt / FPWM / Dimming Duty Cycle / 10 / -- / 100 / % / Ir / LED Forward Current / -- / 45 / -- / mA / Ta = 25°C LTLED / LED Life Time / 50,000 / -- / -- / Hrs / Note 4	
	21	Ta= 70℃, 50%RH, 300hours	Ta= 70℃, 300hours	
1.1 2020/12/15	10	-	Add wet bulb temperature chart	

© AUO Display Plus Corporation Proprietary

<table>
<tr>
<td>1.2 2021/11/18</td>
<td>14</td>
<td><table>
<tr><th>Symbol</th><th>Parameter</th><th>Min</th><th>Typ</th><th>Max</th><th>Units</th><th>Remark</th></tr>
<tr><td>Vcc</td><td>Input Voltage</td><td>10.8</td><td>12</td><td>13.2</td><td>Volt</td><td></td></tr>
<tr><td>Ivcc</td><td>Input Current</td><td>--</td><td>1.2</td><td>--</td><td>A</td><td>100% Dimming</td></tr>
<tr><td>PLED</td><td>Power Consumption</td><td></td><td>14.4</td><td>17.3</td><td>Watt</td><td>100% Dimming</td></tr>
<tr><td>Irush</td><td>Inrush Current</td><td>--</td><td>4</td><td>5</td><td>A</td><td></td></tr>
<tr><td rowspan="2">BL_EN</td><td>On Control Voltage</td><td>3</td><td>--</td><td>5.5</td><td>Volt</td><td></td></tr>
<tr><td>Off Control Voltage</td><td>0</td><td>--</td><td>0.5</td><td>Volt</td><td></td></tr>
<tr><td rowspan="5">FPWM</td><td>PWM Dimming Frequency</td><td>200</td><td>--</td><td>20K</td><td>Hz</td><td></td></tr>
<tr><td>High Voltage</td><td>3.0</td><td>3.3</td><td>5.5</td><td>Volt</td><td></td></tr>
<tr><td>Low Voltage</td><td>0</td><td>--</td><td>0.5</td><td>Volt</td><td></td></tr>
<tr><td>Dimming Duty Cycle</td><td>10</td><td>--</td><td>100</td><td>%</td><td></td></tr>
<tr><td>Dimming Duty 200Hz~5KHz</td><td>5</td><td></td><td>100</td><td>%</td><td></td></tr>
<tr><td>If</td><td>LED Forward Current</td><td></td><td>45</td><td></td><td>mA</td><td>Ta = 25°C</td></tr>
<tr><td>LTLED</td><td>LED Life Time</td><td>50,000</td><td>--</td><td>--</td><td>Hrs</td><td>Note 4</td></tr>
</table></td>
<td>For LED Driver IC EC, LED dimming duty will be chaged as below :<table>
<tr><th>Symbol</th><th>Parameter</th><th>Min</th><th>Typ</th><th>Max</th><th>Units</th><th>Remark</th></tr>
<tr><td>Vcc</td><td>Input Voltage</td><td>10.8</td><td>12</td><td>13.2</td><td>Volt</td><td></td></tr>
<tr><td>Ivcc</td><td>Input Current</td><td>-</td><td>1.2</td><td>-</td><td>A</td><td>100% Dimming</td></tr>
<tr><td>PLED</td><td>Power Consumption</td><td></td><td>14.4</td><td>17.3</td><td>Watt</td><td>100% Dimming</td></tr>
<tr><td>Irush</td><td>Inrush Current</td><td>-</td><td>4</td><td>5</td><td>A</td><td></td></tr>
<tr><td rowspan="2">BL_EN</td><td>On Control Voltage</td><td>3</td><td>-</td><td>5.5</td><td>Volt</td><td></td></tr>
<tr><td>Off Control Voltage</td><td>0</td><td>-</td><td>0.5</td><td>Volt</td><td></td></tr>
<tr><td rowspan="5">FPWM</td><td>PWM Dimming Frequency</td><td>200</td><td>-</td><td>20K</td><td>Hz</td><td></td></tr>
<tr><td>High Voltage</td><td>3.0</td><td>3.3</td><td>5.5</td><td>Volt</td><td></td></tr>
<tr><td>Low Voltage</td><td>0</td><td>-</td><td>0.5</td><td>Volt</td><td></td></tr>
<tr><td>Dimming Duty 200Hz~5KHz</td><td>5</td><td></td><td>100</td><td>%</td><td></td></tr>
<tr><td>Dimming Duty 5KHz~20KHz</td><td>15</td><td>-</td><td>100</td><td>%</td><td></td></tr>
<tr><td>If</td><td>LED Forward Current</td><td></td><td>45</td><td></td><td>mA</td><td>Ta = 25°C</td></tr>
<tr><td>LTLED</td><td>LED Life Time</td><td>50,000</td><td>-</td><td>-</td><td>Hrs</td><td>Note 4</td></tr>
</table></td>
<td></td>
</tr>
<tr>
<td>1.3 2023/03/30</td>
<td>all</td>
<td>Company’s logo change</td>
<td>Company’ s logo change
AUO Display+</td>
<td></td>
</tr>
<tr>
<td></td>
<td>30</td>
<td> 
</td>
<td>Shipping Label Update
 
</td>
<td></td>
</tr>
<tr>
<td></td>
<td>6</td>
<td><table>
<tr><td>Power Consumption</td><td>[Watt]</td><td>23.3 (max) (Cell: 6 + BL: 17.3)</td></tr>
</table></td>
<td><table>
<tr><td>Power Consumption</td><td>[Watt]</td><td>17.4 (max) (Cell: 6 + BL: 11.4)</td></tr>
</table></td>
<td></td>
</tr>
<tr>
<td></td>
<td>14</td>
<td>• 5.2.1 LED Driver
Following characteristics are measured under stable condition at 25℃ (Room Temperature).<table>
<tr><th>Symbol</th><th>Parameter</th><th>Min</th><th>Typ</th><th>Max</th><th>Units</th><th>Remark</th></tr>
<tr><td>Vcc</td><td>Input Voltage</td><td>10.8</td><td>12</td><td>13.2</td><td>Volt</td><td></td></tr>
<tr><td>Ivcc</td><td>Input Current</td><td>--</td><td>1.2</td><td>--</td><td>A</td><td>100% Dimming</td></tr>
<tr><td>PLED</td><td>Power Consumption</td><td></td><td>14.4</td><td>17.3</td><td>Watt</td><td>100% Dimming</td></tr>
<tr><td>Irush</td><td>Inrush Current</td><td>--</td><td>4</td><td>5</td><td>A</td><td></td></tr>
</table></td>
<td>5.2 Backlight Unit
• 5.2.1 LED Driver
Following characteristics are measured under stable condition at 25℃ (Room Temperature).<table>
<tr><th>Symbol</th><th>Parameter</th><th>Min</th><th>Typ</th><th>Max</th><th>Units</th><th>Remark</th></tr>
<tr><td>Vcc</td><td>Input Voltage</td><td>10.8</td><td>12</td><td>13.2</td><td>Volt</td><td></td></tr>
<tr><td>Ivcc</td><td>Input Current</td><td>--</td><td>0.82</td><td>0.95</td><td>A</td><td>100% Dimming</td></tr>
<tr><td>PLED</td><td>Power Consumption</td><td></td><td>9.84</td><td>11.4</td><td>Watt</td><td>100% Dimming</td></tr>
<tr><td>Irush</td><td>Inrush Current</td><td>--</td><td>4</td><td>5</td><td>A</td><td></td></tr>
<tr><td rowspan="2">BL_EN</td><td>On Control Voltage</td><td>3</td><td>--</td><td>5.5</td><td>Volt</td><td></td></tr>
<tr><td>Off Control Voltage</td><td>0</td><td>--</td><td>0.5</td><td>Volt</td><td></td></tr>
</table></td>
<td></td>
</tr>
<tr>
<td>1.4 2023/06/21</td>
<td>20</td>
<td>7.1 TFT LCD Module: LVDS Connector<table>
<tr><th>Connector Name / Designation</th><th>Interface Connector / Interface card</th></tr>
<tr><td>Manufacturer</td><td>JAE or compatible</td></tr>
<tr><td>Type Part Number</td><td>JAE (FI-XB30SRL-HF11) or equivalent.</td></tr>
</table></td>
<td>7.1 TFT LCD Module: LVDS Connector<table>
<tr><th>Connector Name / Designation</th><th>Interface Connector / Interface card</th></tr>
<tr><td>Manufacturer</td><td>STM or compatible</td></tr>
<tr><td>Type Part Number</td><td>STM_MSCK2407P30</td></tr>
</table></td>
<td></td>
</tr>
</table>

© AUO Display Plus Corporation Proprietary

1. Operating Precautions

1) Since front polarizer is easily damaged, pay attention not to scratch it.
2) Be sure to turn off power supply when inserting or disconnecting from input connector.
3) Wipe off water drop immediately. Long contact with water may cause discoloration or spots.
4) When the panel surface is soiled, wipe it with absorbent cotton or other soft cloth.
5) Since the panel is made of glass, it may break or crack if dropped or bumped on hard surface.
6) Since CMOS LSI is used in this module, take care of static electricity and insure human earth when handling.
7) Do not open or modify the Module Assembly.
8) In case if a Module has to be put back into the packing container slot after once it was taken out from the container, take it easily, or the TFT Module may be damaged.
9) At the insertion or removal of the Signal Interface Connector, be sure not to rotate nor tilt the Interface Connector of the TFT Module.
10) After installation of the TFT Module into an enclosure, do not twist nor bend the TFT Module even momentary. At designing the enclosure, it should be taken into consideration that no bending/twisting forces are applied to the TFT Module from outside. Otherwise the TFT Module may be damaged.
11) Small amount of materials having no flammability grade is used in the LCD module. The LCD module should be supplied by power complied with requirements of Limited Power Source (IEC60950 or UL1950), or be applied exemption.
12) Severe temperature condition may result in different luminance, response time and LED life time.
13) The data on this specification sheet is applicable when LCD module is placed in landscape position.
14) Continuous displaying fixed pattern may induce image sticking. It is recommended to use screen saver or shuffle content periodically if fixed pattern is displayed on the screen.

© AUO Display Plus Corporation Proprietary

2. General Description

This specification applies to the 24 inch-wide Color TFT-LCD Module G240HW01 V1. The display supports the Full HD - 1920(H) x 1080(V) screen format and 16.7M colors (RGB 8-bits data). All input signals are dual channel LVDS interface.

LED driver board is included. G240HW01 V1 is designed for industrial display applications.

2.1 Display Characteristics

The following items are characteristics summary on the table under 25 ℃ condition:

ITEMS	Unit	SPECIFICATIONS
Screen Diagonal	[mm]	609.7(24.0")
Active Area	[mm]	531.36 (H) x 298.89 (V)
Pixels H x V		1920(x3) x 1080
Pixel Pitch	[um]	276.75 (per one triad) ×276.75
Pixel Arrangement		R.G.B. Vertical Stripe
Display Mode		VA Mode, Normally Black
White Luminance (Center)	[cd/m^2]	300
Contrast Ratio		5000: 1
Optical Response Time	[msec]	25
Nominal Input Voltage VDD	[Volt]	+5.0 V
Power Consumption	[Watt]	17.4 (max) (Cell: 6 + BL: 11.4)
Weight	[g]	2,130 (Typ.)+/-213 g
Physical Size	[mm]	556.0 (W) x 323.2 (H) x 17.0 (D)
Electrical Interface		Dual channel LVDS
Support Color		16.7M colors (true 8-bit)
Surface Treatment		Anti-Glare, 3H
Temperature Range Operating Storage (Shipping)	[^{o}C] [^{o}C]	-20 to +70 -30 to +80
RoHS Compliance		RoHS Compliance

© AUO Display Plus Corporation Proprietary

2.2 Optical Characteristics

The optical characteristics are measured under stable conditions at 25℃ (Room Temperature):

Item	Unit	Conditions	Min.	Typ.	Max.	Note
White Luminance	[cd/m2]	I_F= 45 mA	240	300	-	1
Uniformity	%	9 Points	75	80	-	1, 2, 3
Contrast Ratio			3000	5000	-	4
Cross talk	%		-	-	1.5	5
Response Time	[msec]	Rising	-	16	-	6
		Falling	-	9	-	
		Rising + Falling	-	25	50	
Viewing Angle	[degree] [degree]	Horizontal (Right) CR = 10 (Left)	75 75	89 89	- -	7
	[degree] [degree]	Vertical (Upper) CR = 10 (Lower)	75 75	89 89	- -	
Color / Chromaticity Coordinates (CIE 1931)		Red x	0.593	0.643	0.693	
		Red y	0.289	0.339	0.389	
		Green x	0.279	0.329	0.379	
		Green y	0.574	0.624	0.674	
		Blue x	0.105	0.155	0.205	
		Blue y	0.000	0.048	0.098	
		White x	0.263	0.313	0.363	
		White y	0.279	0.329	0.379	
Color Gamut	%			72	-	

Note 1: Measurement method

Equipment Pattern Generator, Power Supply, Digital Voltmeter, Luminance meter (SR_3 or equivalent)

Aperture 1° with 50cm viewing distance

Test Point Center

Environment *< 1 lux*

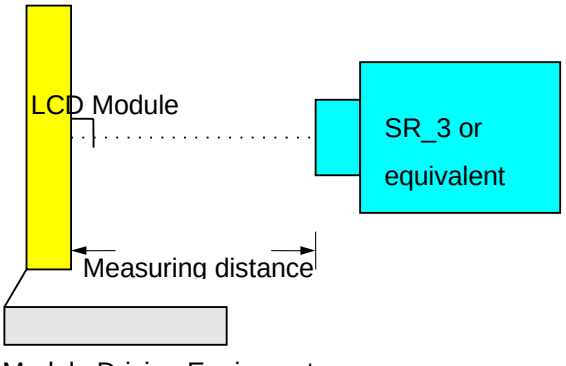

© AUO Display Plus Corporation Proprietary

Note 2: Definition of 9 points position. Display active area:

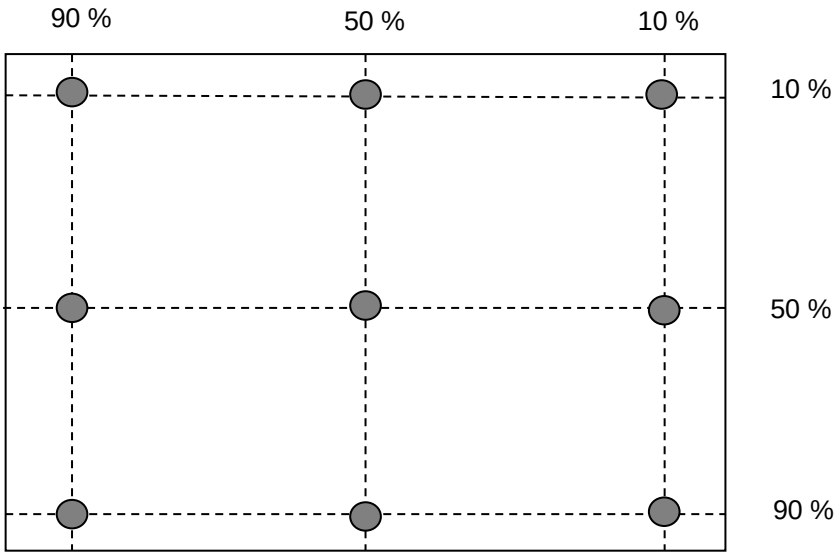

Note 3: The luminance uniformity of 9 points is defined by dividing the minimum luminance values by the maximum test point luminance

$$\delta_{W9} = \frac{\text{Minimum Brightness of nine points}}{\text{Maximum Brightness of nine points}}$$

Note 4： Definition of contrast ratio (CR):

$$\text{Contrast ratio (CR)} = \frac{\text{Brightness on the “White” state}}{\text{Brightness on the “Black” state}}$$

Note 5： Definition of cross talk (CT)

CT = | YB – YA | / YA × 100 (%)
Where
YA = Luminance of measured location without gray level 255 pattern (cd/m2)
YB = Luminance of measured location with gray level 255 pattern (cd/m2)

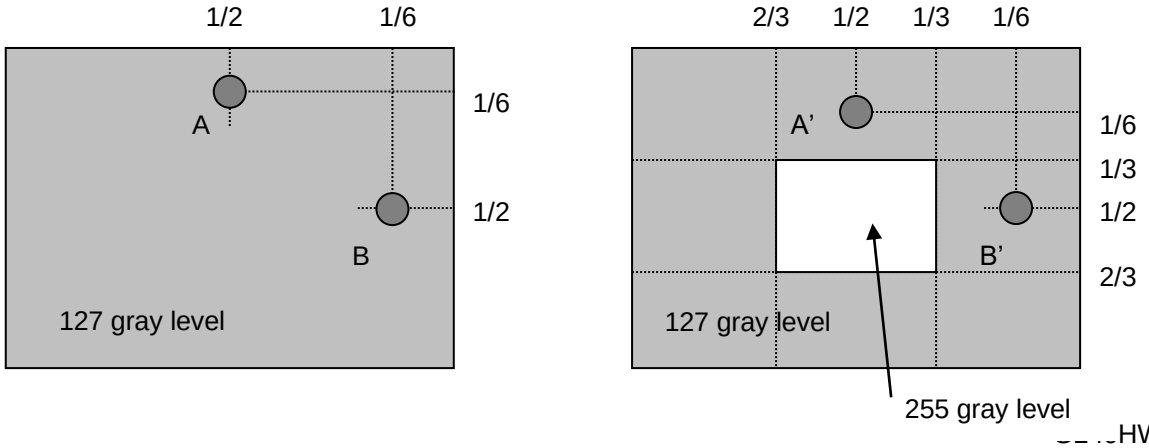

© AUO Display Plus Corporation Proprietary

Note 6: Definition of response time:

The output signals of photo detector are measured when the input signals are changed from “White” to “Black” (falling time) and from “Black” to “White” (rising time), respectively. The response time interval is between 10% and 90% of amplitudes. Please refer to the figure as below.

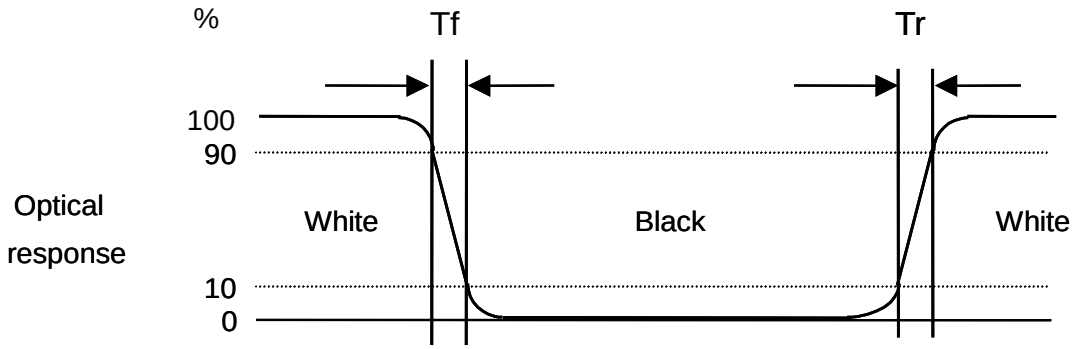

Note 7: Definition of viewing angle

Viewing angle is the measurement of contrast ratio ≧10, at the screen center, over a 180° horizontal and 180° vertical range (off-normal viewing angles). The 180° viewing angle range is broken down as below: 90° (θ) horizontal left and right, and 90° (Φ) vertical high (up) and low (down). The measurement direction is typically perpendicular to the display surface with the screen rotated to its center to develop the desired measurement viewing angle.

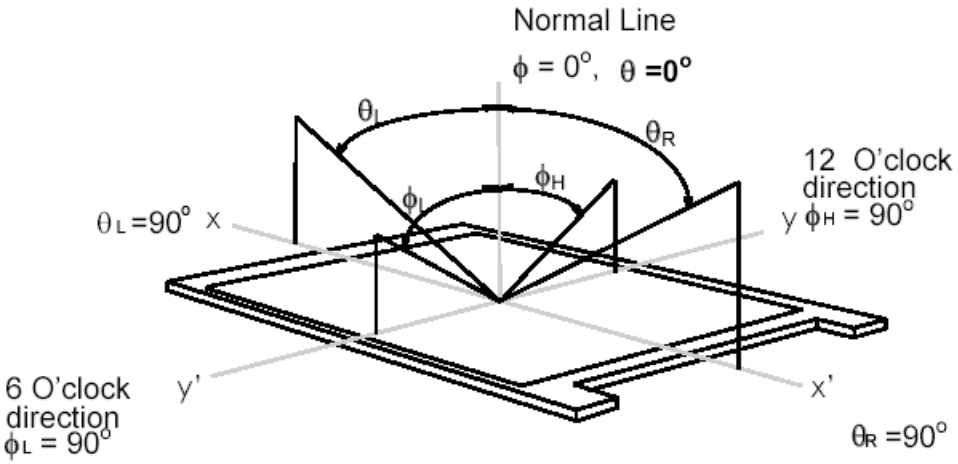

© AUO Display Plus Corporation Proprietary

3. Functional Block Diagram

The following diagram shows the functional block of the 24 inches wide Color TFT-LCD Module:

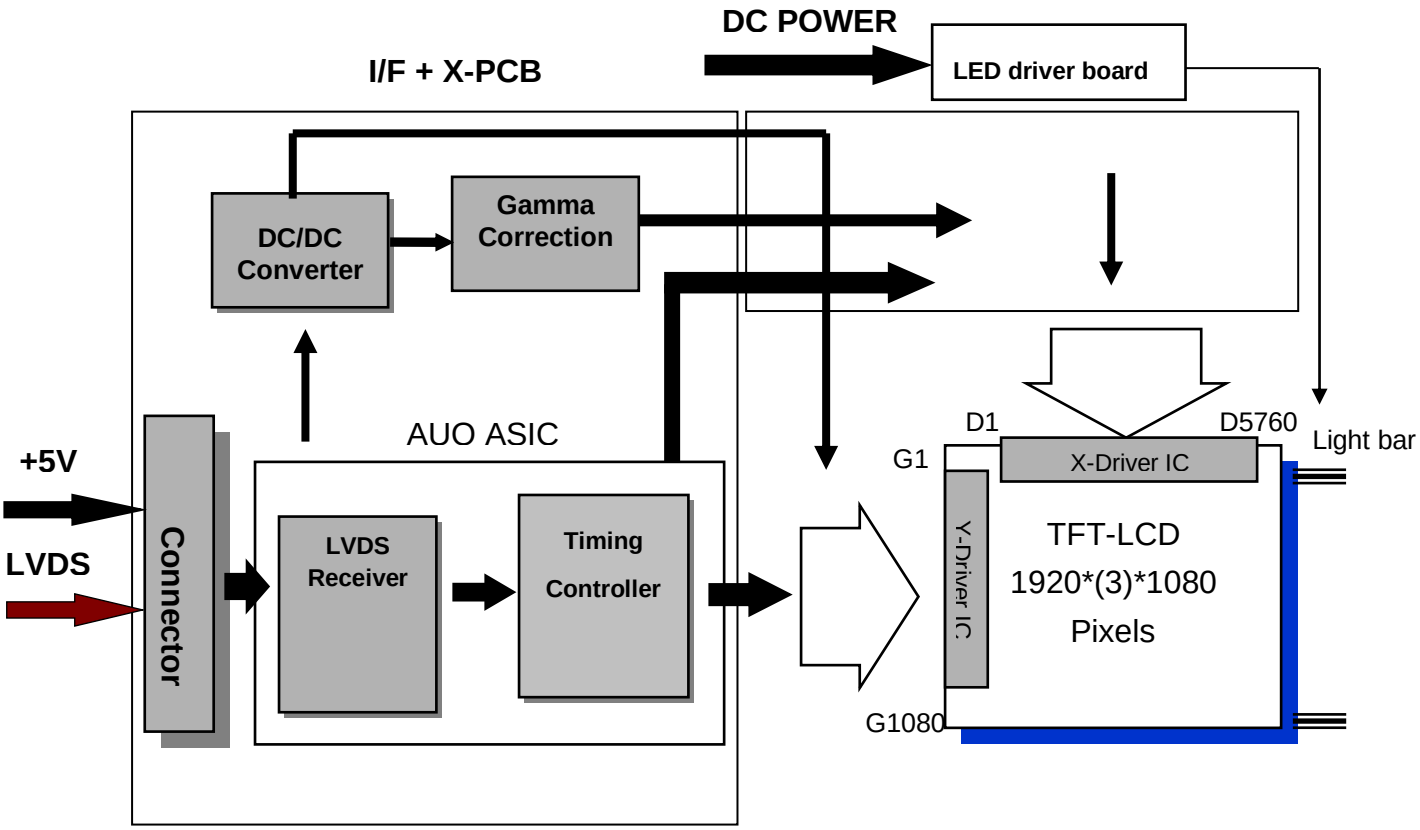

LVDS Connector: JAE (FI-XB30SRL-HF11) or equivalent.
LED Connector: Sin Sheng (MS24049HJ) or equivalent.

© AUO Display Plus Corporation Proprietary

4. Absolute Maximum Ratings

4.1 TFT LCD Module

Item	Symbol	Min	Max	Unit	Conditions
Logic/LCD Drive Voltage	VDD	0	5.5	[Volt]	***Note 1,2***

4.2 Backlight Unit

Item	Symbol	Min	Max	Unit	Conditions
LED Input Voltage	Vcc	10.8	13.2	[Volt]	***Note 1,2***

4.3 Absolute Ratings of Environment

Item	Symbol	Min.	Max.	Unit	Conditions
Operating Temperature	TOP	-20	70	[°C]	***Note 3***
Operation Humidity	HOP	5	90	[%RH]	
Storage Temperature	TST	-30	80	[°C]	
Storage Humidity	HST	5	90	[%RH]	

Note 1: With in Ta (25℃)
Note 2: Permanent damage to the device may occur if exceeding maximum values
Note 3: For quality perfermance, please refer to AUO IIS(Incoming Inspection Standard).
Note 4: Maximum Wet-Bulb should be 39℃ and no condensation.
Note 5: Function judged only.

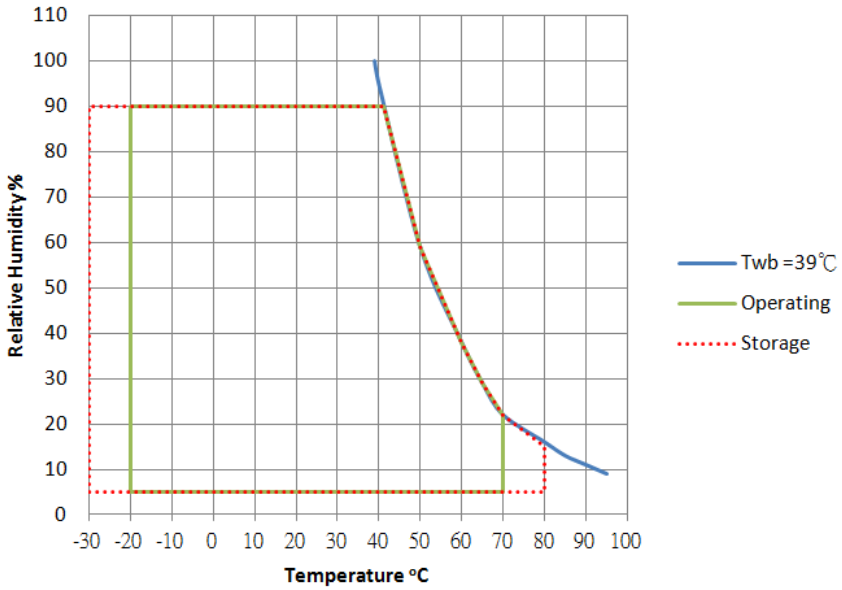

Note 4,5

© AUO Display Plus Corporation Proprietary

5. Electrical Characteristics

5.1 TFT LCD Module

5.1.1 Power Specification

Symbol	Parameter	Min	Typ	Max	Units	Remark
VDD	Logic/LCD Drive Voltage	4.5	5.0	5.5	[Volt]	±10%
IDD	VDD Current	-	900	1200	[mA]	VDD= 5.0V, All White Pattern At 60Hz
Irush	LCD Inrush Current	-	-	3	[A]	Note 1
PDD	VDD Power	-	4.5	6	[Watt]	VDD= 5.0V, All White Pattern At 60Hz

Note 1: Measurement condition:

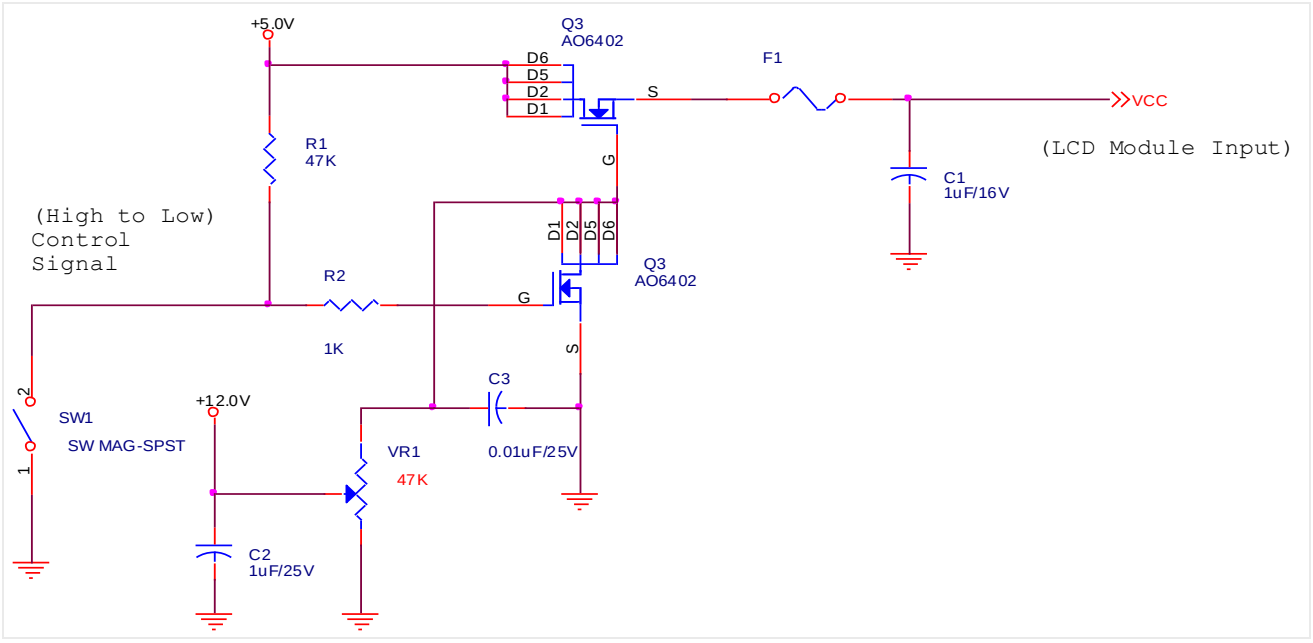

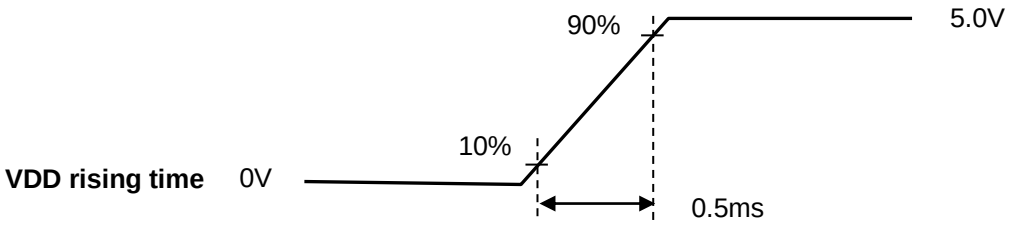

© AUO Display Plus Corporation Proprietary

5.1.2 Signal Electrical Characteristics

Input signals shall be low or Hi-Z state when VDD is off.

Symbol	Item	Min.	Typ.	Max.	Unit	Remark
VTH	Differential Input High Threshold	-	-	100	[mV]	VCM=1.2V
VTL	Differential Input Low Threshold	-100	-	-	[mV]	VCM=1.2V
| VID |	Input Differential Voltage	100	400	600	[mV]	
VICM	Differential Input Common Mode Voltage	0.3	-	1.25	[V]	VTH/VTL=±100mV

Note: LVDS Signal Waveform.

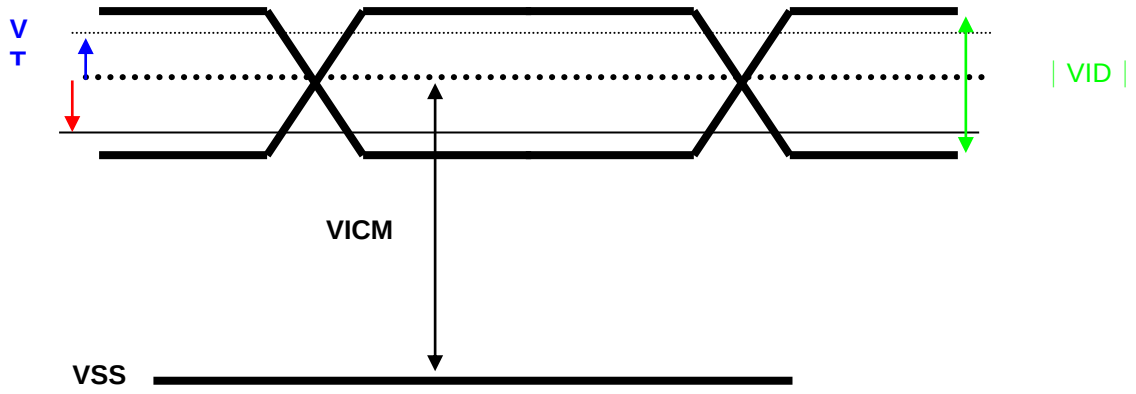

© AUO Display Plus Corporation Proprietary

5.2 Backlight Unit

5.2.1 LED Driver

Following characteristics are measured under stable condition at 25℃ (Room Temperature).

Symbol	Parameter	Min	Typ	Max	Units	Remark
Vcc	Input Voltage	10.8	12	13.2	Volt	
Ivcc	Input Current	-	0.82	0.95	A	100% Dimming
PLED	Power Consumption		9.84	11.4	Watt	100% Dimming
Irush	Inrush Current	-	4	5	A	
BL_EN	On Control Voltage	3	-	5.5	Volt	
	Off Control Voltage	0	-	0.5	Volt	
FPWM	PWM Dimming Frequency	200	-	20K	Hz	
	High Voltage	3.0	3.3	5.5	Volt	
	Low Voltage	0	-	0.5	Volt	
	Dimming Duty 200Hz~5KHz	5		100	%	
	Dimming Duty 5KHz~20KHz	15	-	100	%	
I_F	LED Forward Current		45		mA	Ta = 25°C
LTLED	LED Life Time	50,000	-	-	Hrs	**Note 4**

Note 1: Ta means ambient temperature of TFT-LCD module,

Note 2: If module is driven by high current or at high ambient temperature & humidity condition. The operating life will be reduced.

Note 3: LED light bar structure: (7 strings x 10pcs / string =70pcs LED)

Note 4: Definition of life time: Brightness becomes to 50% of its original value. The minimum life time of LED unit is on the condition of I_F = 45 mA and 25±2°C (Room Temperature).

© AUO Display Plus Corporation Proprietary

6. Signal Characteristic

6.1 Pixel Format Image

Following figure shows the relationship of the input signals and LCD pixel format.

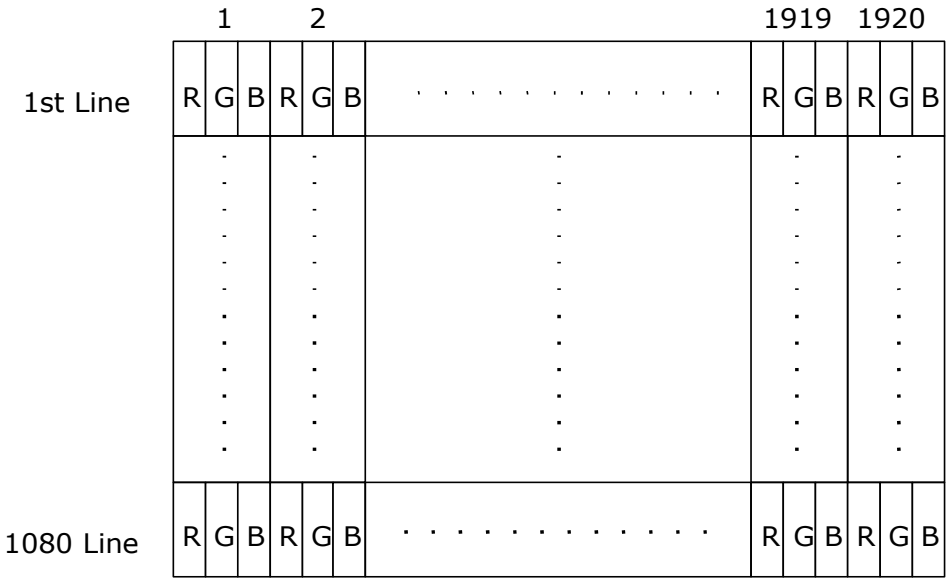

© AUO Display Plus Corporation Proprietary

6.2 Signal Description

The module using a pair of LVDS receiver SN75LVDS82(Texas Instruments) or compatible. LVDS is a differential signal technology for LCD interface and high speed data transfer device. Transmitter shall be SN75LVDS83(negative edge sampling) or compatible**.** The first LVDS port(RxOxxx) transmits odd pixels while the second LVDS port(RxExxx) transmits even pixels.

PIN #	SIGNAL NAME	DESCRIPTION
1	RXinO0-	Negative LVDS differential data input (Odd data)
2	RXinO0+	Positive LVDS differential data input (Odd data)
3	RXinO1-	Negative LVDS differential data input (Odd data)
4	RXinO1+	Positive LVDS differential data input (Odd data)
5	RXinO2-	Negative LVDS differential data input (Odd data, H-Sync, V-Sync, DSPTMG)
6	RXinO2+	Positive LVDS differential data input (Odd data, H-Sync, V-Sync, DSPTMG)
7	GND	Power Ground
8	RxOCLKIN-	Negative LVDS differential clock input (Odd clock)
9	RxOCLKIN+	Positive LVDS differential clock input (Odd clock)
10	RXinO3-	Negative LVDS differential data input (Odd data)
11	RXinO3+	Positive LVDS differential data input (Odd data)
12	RXinE0-	Negative LVDS differential data input (Even data)
13	RXinE0+	Positive LVDS differential data input (Even data)
14	GND	Power Ground
15	RXinE1-	Negative LVDS differential data input (Even data)
16	RXinE1+	Positive LVDS differential data input (Even data)
17	GND	Power Ground
18	RXinE2-	Negative LVDS differential data input (Even data)
19	RXinE2+	Positive LVDS differential data input (Even data)
20	RxECLKIN-	Negative LVDS differential clock input (Even clock)
21	RxECLKIN+	Positive LVDS differential clock input (Even clock)
22	RXinE3-	Negative LVDS differential data input (Even data)
23	RXinE3+	Positive LVDS differential data input (Even data)
24	GND	Power Ground
25	NC	No contact (For AUO test only)
26	NC	No contact (For AUO test only)
27	VDD	Power +5V
28	VDD	Power +5V
29	VDD	Power +5V
30	VDD	Power +5V

© AUO Display Plus Corporation Proprietary

6.3 The Input Data Format

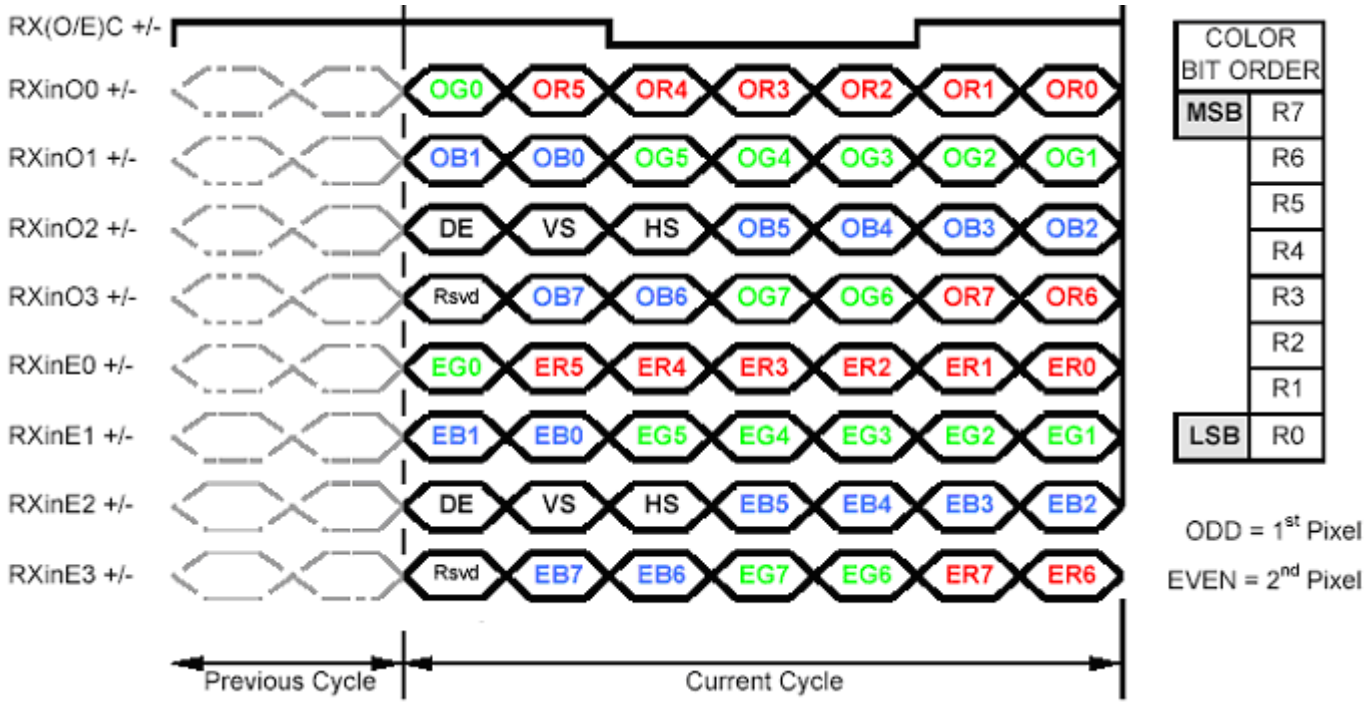

Note1: 8-bits signal input.
Note2: L:NS alike H:Thine alike

© AUO Display Plus Corporation Proprietary

6.4 Interface Timing

6.4.1 Timing Characteristics

Signal	Item	Symbol	Min	Typ	Max	Unit
Clock	Frequency	1/ T_{Clock}	40	72	83	MHz
Frame Rate	Frequency	1/Tv	50	60	75	Hz
Vertical Section	Period	T_V	1088	1120	2047	T_line
	Active	T_{VD}	1080	1080	1080	
	Blanking	T_{VB}	8	40	967	
Horizontal Section	Period	T_H	1034	1060	2047	T_clock
	Active	T_{HD}	960	960	960	
	Blanking	T_{HB}	74	100	1087	

Note: DE mode only.

6.4.2 Input Timing Diagram

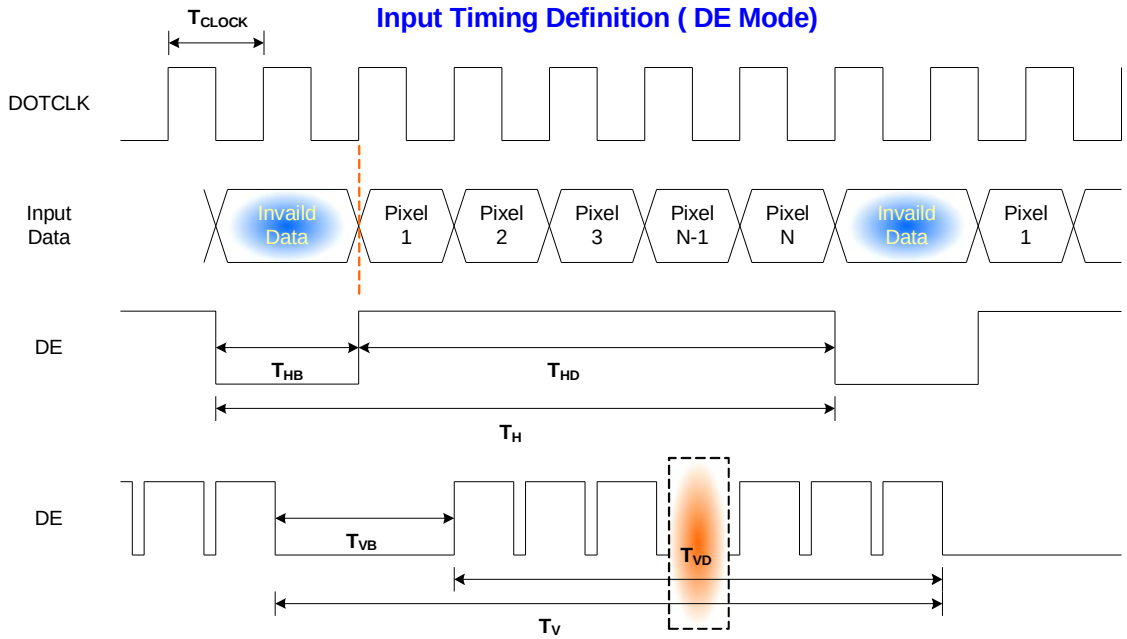

© AUO Display Plus Corporation Proprietary

6.5 Power ON/OFF Sequence

VDD power and B/L on/off sequence is as below. Interface signals are also shown in the chart. Signals from any system shall be Hi-Z state or low level when VDD is off.

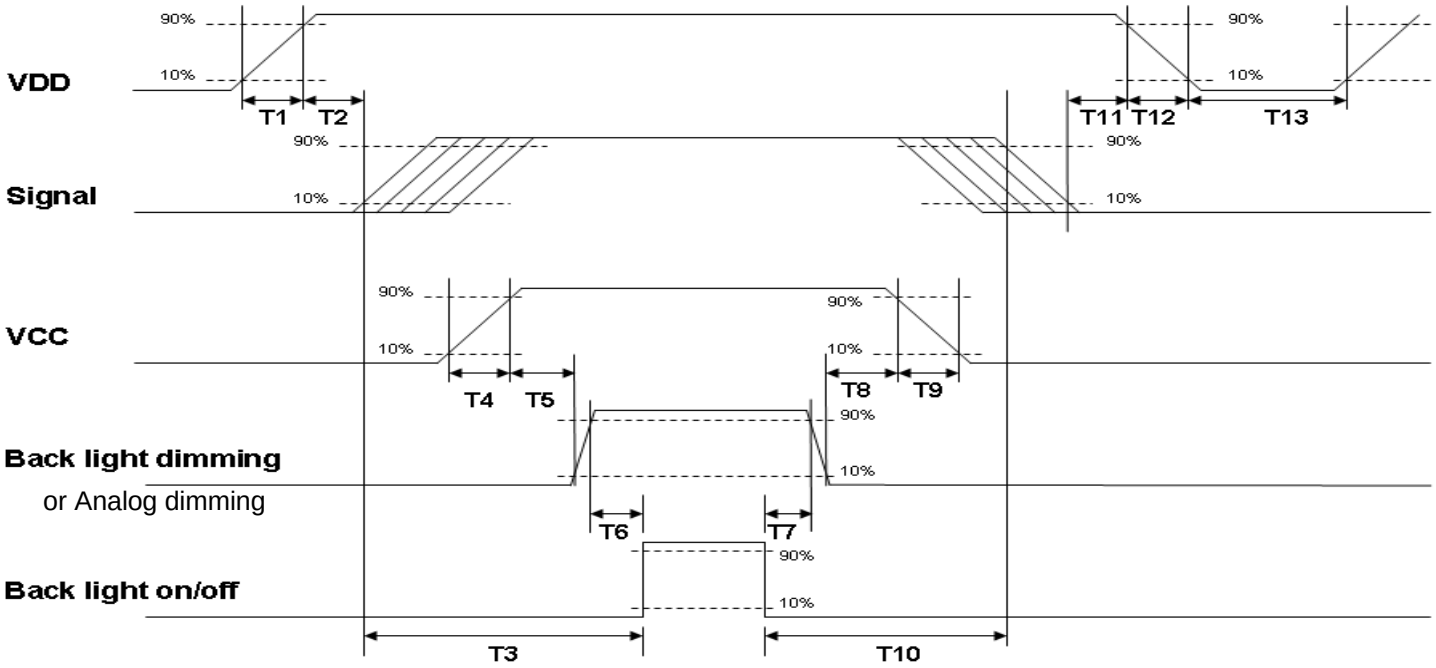

Power ON/OFF sequence timing

Parameter	Value			Units
	Min.	Typ.	Max.	
T1	0.5	--	10	[ms]
T2	30	40	50	[ms]
T3	200	--	--	[ms]
T4	0.5	--	10	[ms]
T5	10	--	--	[ms]
T6	10	--	--	[ms]
T7	0	--	--	[ms]
T8	10	--	--	[ms]
T9	--	--	10	[ms]
T10	110	--	--	[ms]
T11	0	16	50	[ms]
T12	--	--	10	[ms]
T13	1000	--	--	[ms]

The above on/off sequence should be applied to avoid abnormal function in the display. Please make sure to turn off the power when you plug the cable into the input connector or pull the cable out of the connector.

© AUO Display Plus Corporation Proprietary

7. Connector & Pin Assignment

Physical interface is described as for the connector on module. These connectors are capable of accommodating the following signals and will be following components.

7.1 TFT LCD Module: LVDS Connector

Connector Name / Designation	Interface Connector / Interface card
Manufacturer	STM or compatible
Type Part Number	STM_MSCK2407P30
Mating Housing Part Number	FI-X30HL (JAE) or compatible

Pin#	Signal Name	Pin#	Signal Name
1	RxOIN0-	2	RxOIN0+
3	RxOIN1-	4	RxOIN1+
5	RxOIN2-	6	RxOIN2+
7	GND	8	RxOCLKIN-
9	RxOCLKIN+	10	RxOIN3-
11	RxOIN3+	12	RxEIN0-
13	RxEIN0+	14	GND
15	RxEIN1-	16	RxEIN1+
17	GND	18	RxEIN2-
19	RxEIN2+	20	RxECLKIN-
21	RxECLKIN+	22	RxEIN3-
23	RxEIN3+	24	GND
25	NC	26	NC
27	VDD	28	VDD
29	VDD	30	VDD

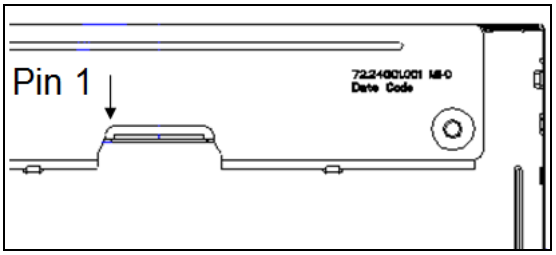

© AUO Display Plus Corporation Proprietary

7.2 Backlight Unit: LED Connector

Connector Name / Designation	LED Connector
Manufacturer	Sin Sheng or compatible
Connector Model Number	MS24049HJ
Mating Housing Part Number	P24049 or compatible

PIN #	SIGNAL NAME	DESCRIPTION
1	V12	Input voltage, 12V
2	V12	Input voltage, 12V
3	V12	Input voltage, 12V
4	---	NC
5	GND	Ground
6	GND	Ground
7	GND	Ground
8	BL_EN	Back light enable, 3~5.5 V
9	BL_DIM_P	Back light dimming, 3~5.5 V

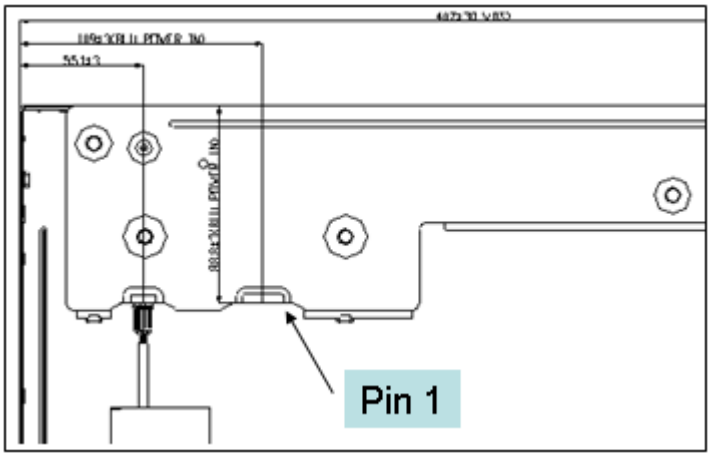

© AUO Display Plus Corporation Proprietary

8. Reliability Test

Environment test conditions are listed as following table.

Items	Required Condition	Note
Temperature Humidity Bias (THB)	Ta= 50℃, 80%RH, 300hours	
High Temperature Operation (HTO)	Ta= 70℃, 300hours	
Low Temperature Operation (LTO)	Ta= -20℃, 300hours	
High Temperature Storage (HTS)	Ta= 80℃, 300hours	
Low Temperature Storage (LTS)	Ta= -30℃, 300hours	
Vibration Test (Non-operation)	Acceleration: 1.5 Grms Wave: Random Frequency: 10 - 200 Hz Duration: 30 Minutes each Axis (X, Y, Z)	
Shock Test (Non-operation)	Acceleration: 50 G Wave: Half-sine Active Time: 20 ms Direction: ±X, ±Y, ±Z (one time for each Axis)	
Drop Test	Height: 46 cm, package test	
Thermal Shock Test (TST)	-20℃/30min, 60℃/30min, 100 cycles	
On/Off Test	On/10sec, Off/10sec, 30,000 cycles	
ESD (Electro Static Discharge)	Contact Discharge: ± 8KV, 150pF(330Ω) 1sec, 8 points, 25 times/ point.	***1***
	Air Discharge: ± 15KV, 150pF(330Ω) 1sec 8 points, 25 times/ point.	
Altitude Test	Operation:10,000 ft Non-Operation:30,000 ft	

Note 1: According to EN61000-4-2, ESD class B: Some performance degradation allowed. No data lost Self-recoverable. No hardware failures.

Note2:

- Water condensation is not allowed for each test items.
- Each test is done by new TFT-LCD module. Don't use the same TFT-LCD module repeatedly for reliability test.
- The reliability test is performed only to examine the TFT-LCD module capability.
- To inspect TFT-LCD module after reliability test, please store it at room temperature and room humidity for 24 hours at least in advance.
- No function failure occurs.

© AUO Display Plus Corporation Proprietary

9. Mechanical Characteristics

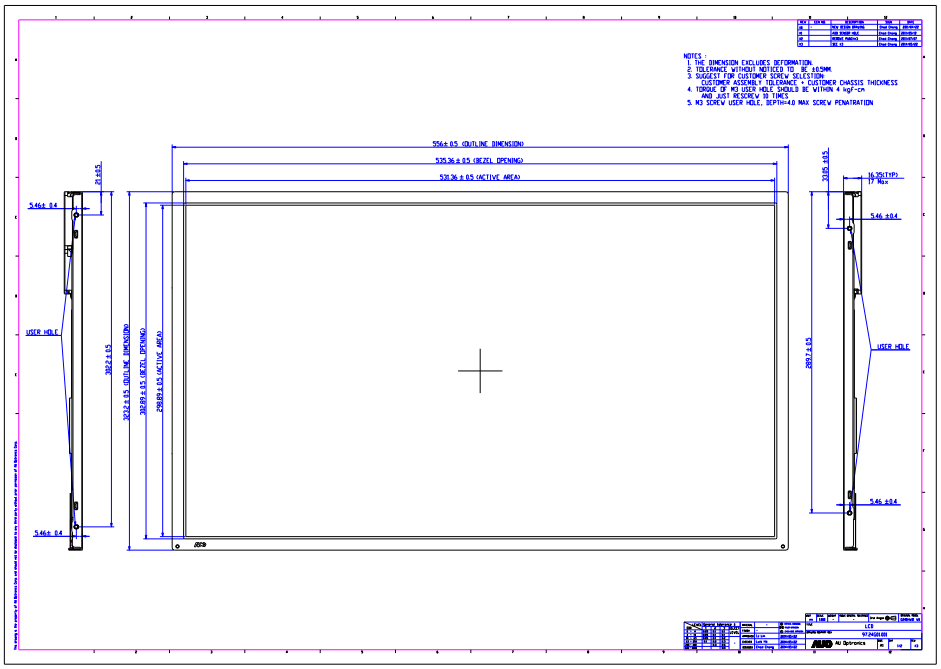

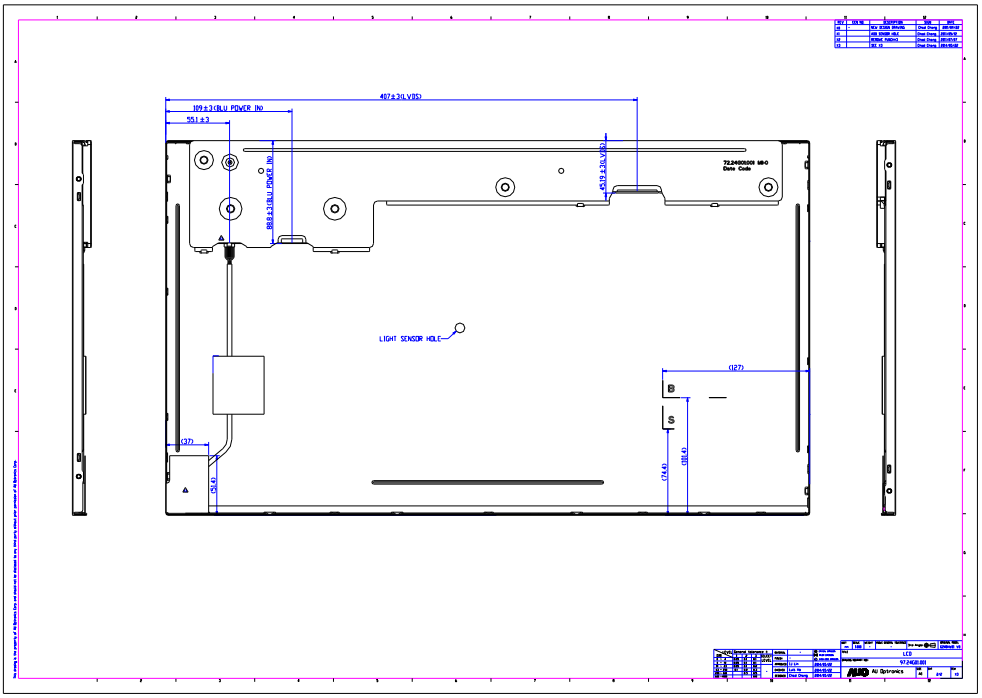

© AUO Display Plus Corporation Proprietary

10. Label and Packaging

10.1 Shipping Label (on the rear side of TFT-LCD display)



10.2 Carton Package

- The outside dimension of carton is 413 x 282x 661 (mm).
- 8 pieces per carton box.
- 2*4 boxes per layer. By air, 2 layer / pallet. By sea, refer packing documents. Pallet size (not include carton boxes): 1150 mm * 840 mm * 132 mm

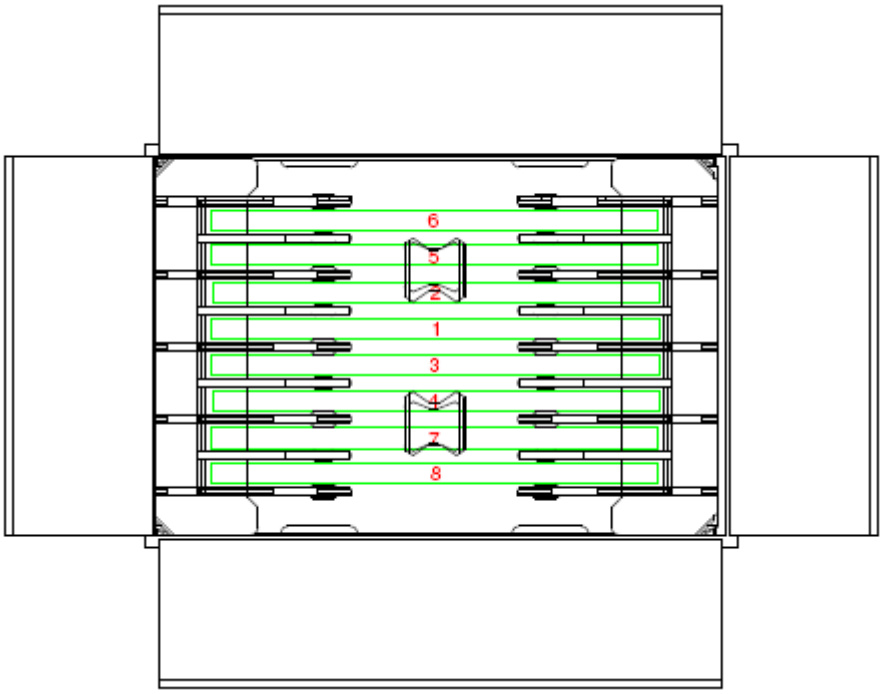

© AUO Display Plus Corporation Proprietary

11. Safety

11.1 Sharp Edge Requirements

There will be no sharp edges or comers on the display assembly that could cause injury.

11.2 Materials

11.2.1 Toxicity

There will be no carcinogenic materials used anywhere in the display module. If toxic materials are used, they will be reviewed and approved by the responsible AUO toxicologist.

11.2.2 Flammability

The printed circuit board will be made from material rated 94-V1 or better. The actual UL flammability rating will be printed on the printed circuit board.

11.3 Capacitors

If any polarized capacitors are used in the display assembly, provisions will be made to keep them from being inserted backwards.

11.4 International Safety Standard Compliance

The TFT-LCD module will satisfy all requirements for compliance to:IEC/UL 62368-1

© AUO Display Plus Corporation Proprietary