( ) Preliminary Specification
(V) Final Specification

Module	**21.5" Color TFT-LCD**
Model Name	**M215HAN01.2**

Customer	**Date**	**Approved by**	**Date**
		Flossie Chuang	Oct. 01, 2020
Approved by		**Prepared by**	**Date**
		Roxanne Lin	Oct. 01, 2020
Note: This Specification is subject to change without notice.		AU Optronics corporation	

AUO Confidential
For ACMEPOINT Internal Use Only
20201225 11:03:19

For ACMEPOINT internal use only - provided by davidcwhsing on 2020/12/25

Contents

1 Handling Precautions 4
2 General Description 5
2.1 Display Characteristics 5
2.2 Absolute Maximum Rating of Environment 6
2.3 Optical Characteristics 7
2.4 Mechanical Characteristics 10
3 TFT-LCD Module 12
3.1 Block Diagram 12
3.2 Interface Connection 13
3.2.1 Connector Type 13
3.2.2 Connector Pin Assignment 13
3.3 Electrical Characteristics 15
3.3.1 Absolute Maximum Rating 15
3.3.2 Recommended Operating Condition 15
3.4 Signal Characteristics 16
3.4.1 LCD Pixel Format 16
3.4.2 LVDS Data Format 16
3.4.3 Color versus Input Data 17
3.4.4 LVDS Specification 18
3.4.5 Input Timing Specification 20
3.4.6 Input Timing Diagram 21
3.5 Power ON/OFF Sequence 22
4 Backlight Unit 23
4.1 Block Diagram 23
4.2 Interface Connection 24
4.2.1 Connector Type 24
4.2.2 Connector Pin Assignment 25
4.3 Electrical Characteristics 26
4.3.1 Absolute Maximum Rating 26
4.3.2 Recommended Operating Condition 26
5 Reliability Test 28
6 Shipping Label 29
7 Mechanical Characteristics 30
8 Packing Specification 32
8.1 Packing Flow 32
8.2 Pallet and shipment information 33
9 Design Guide for System 34

AUO Confidential
For ACMEPOINT internal use only - provided by davidcwhsing on 2020/12/25

Record of Revision

Version	Date	Page	Old description	New Description	Remark
0.1	2015/2/2	All	First Edition for Customer		
0.2	2016/4/18	5/7/26	1. Backlight unit : P_{BLU} (Typ.) =8.9 @Is= 60 mA 2. LED current 60mA 3. Power consumption :11.2 W	1. Backlight unit : P_{BLU} (Typ.) =9.1 @Is= 65 mA 2. LED current 65mA 3. Power consumption : 11.4 W	
1.0	2016/5/1	All	Final Edition for Customer		
1.1	2016/5/27	P7	Red x 0.617 0.647 0.677 Red y 0.304 0.334 0.364 Green x 0.293 0.323 0.353 Green y 0.59 0.620 0.65 Blue x 0.125 0.155 0.185 Blue y 0.027 0.057 0.087 White x 0.283 0.313 0.343 White y 0.299 0.329 0.359	Red x 0.617 0.647 0.677 Red y 0.304 0.334 0.364 Green x 0.290 0.320 0.350 Green y 0.595 0.625 0.655 Blue x 0.125 0.155 0.185 Blue y 0.020 0.050 0.080 White x 0.283 0.313 0.343 White y 0.299 0.329 0.359	
1.2	2016/8/1	P5,P33	Weight [Grams] 1380 (TBD)	Weight [Grams] 1740 (TBD)	
		P30	NA	Drawing update (add BM deviation spec)	
1.2	2016/8/1	P33	Update 8.2 packing weight spec.		
1.3	2016/4/10	P13	TFT-LCD Connector: Manufacturer P-TWO, STM; Part Number 187034-3009, MSBKT2407P30HB Mating Connector: Manufacturer JAE; Part Number FI-X30HL (Locked Type)	TFT-LCD Connector: Manufacturer P-TWO, STM; Part Number 187034-3009, MSBKT2407P30HB Mating Connector: Manufacturer JAE; Part Number FI-X30H (Unlocked Type)	
1.4	2020/10/01	P30	6 Shipping Label No Cd free mark		

AUO Confidential
AUO Confidential Internal Use Only
For ACMEPOINT internal use only
20201225 11:03:19

For ACMEPOINT internal use only - provided by davidcwhsing on 2020/12/25

1 Handling Precautions

1) Since polarizer is easily damaged, do not touch or press the surface of polorizer with hand.
2) Be sure to turn off power supply when inserting or disconnecting from input connector.
3) Wipe off water drop immediately. Long contact with water may cause discoloration or spots.
4) When the panel surface is soiled, wipe it with absorbent cotton or other soft cloth.
5) Since the panel is made of glass, it may break or crack if dropped or bumped on hard surface.
6) Since CMOS LSI is used in this module, take care of static electricity and insure human earth when handling.
7) Do not open or modify the Module Assembly.
8) Do not press the reflector sheet at the back of the module to any directions.
9) In case a TFT-LCD Module has to be put back into the packing container slot after once it was taken out from the container, do not press the center of the LED lightbar edge. Otherwise the TFT-LCD Module may be damaged.
10) Insert or pull out the interface connector, be sure not to rotate nor tilt it of the TFT-LCD Module.
11) Do not twist nor bend the TFT -LCD Module even momentary. It should be taken into consideration that no bending/twisting forces are applied to the TFT-LCD Module from outside. Otherwise the TFT-LCD Module may be damaged.
12) Please avoid touching COF position while you are doing mechanical design.
13) When storing modules as spares for a long time, the following precaution is necessary: Store them in a dark place. Do not expose the module to sunlight or fluorescent light. Keep the temperature between 5°C and 35°C at normal humidity.
14) Do not apply the same pattern for a long time, it will enhance relevant defect.

AUO Confidential
For ACMEPOINT Internal Use Only
20201225 11:03:19

For ACMEPOINT internal use only - provided by davidcwhsing on 2020/12/25

2 General Description

This specification applies to the 21.5 inch wide Color a-Si TFT-LCD Module M215HAN01.2. The display supports the Full HD - 1920(H) x 1080(V) screen format and 16.7M colors (8 bits RGB data input). The input interface is Dual channel LVDS and this module doesn't contain an driver board for backlight.

2.1 Display Characteristics

The following items are characteristics summary on the table under 25°C condition:

ITEMS	Unit	SPECIFICATIONS
Screen Diagonal	[mm]	546.86 (21.5")
Active Area	[mm]	476.064 (H) x 267.786 (V)
Pixels H x V	-	1920(x3) x 1080
Pixel Pitch	[um]	247.95 (per one triad) ×247.95
Pixel Arrangement	-	R.G.B. Vertical Stripe
Display Mode	-	AHVA Mode, Normally Black
White Luminance (Center)	[cd/m^2]	250 (Typ.)
Contrast Ratio	-	1000 (Typ.)
Response Time	[msec]	14 (Typ., GTG)
Power Consumption (LCD Module + Backligh unit)	[Watt]	11.4 (Typ.) LCD module : PDD (Typ.)= 2.3 @ White pattern,Fv=60Hz Backlight unit : P_{BLU} (Typ.) =9.1 @Is= 65 mA
Weight	[Grams]	1740 (TBD)
Outline Dimension	[mm]	497.6(H) × 292.2(V) ×10.5 (D) Typ
Electrical Interface	-	Dual channel LVDS , 8 bits RGB data input
Support Color	-	16.7M colors
Surface Treatment	-	Anti-Glare, 3H
Temperature Range Operating Storage (Shipping)	 [°C] [°C]	 0 to +50 -20 to +60
RoHS Compliance	-	RoHS Compliance
TCO Compliance	-	TCO 7.0 Compliance

For ACMEPOINT internal use only - provided by davidcwhsing on 2020/12/25

2.2 Absolute Maximum Rating of Environment

Permanent damage may occur if exceeding the following maximum rating.

Symbol	Description	Min.	Max.	Unit	Remark
TOP	Operating Temperature	0	+50	[°C]	***Note 2-1***
TGS	Glass surface temperature (operation)	0	+65	[°C]	***Note 2-1*** *Function judged only*
HOP	Operation Humidity	5	90	[%RH]	***Note 2-1***
TST	Storage Temperature	-20	+60	[°C]	
HST	Storage Humidity	5	90	[%RH]	

Note 2-1: Temperature and relative humidity range are shown as the below figure.

1. 90% RH Max (Ta ≦39℃)
2. Max wet-bulb temperature at 39℃ or less. (Ta ≦39℃)
3. No condensation

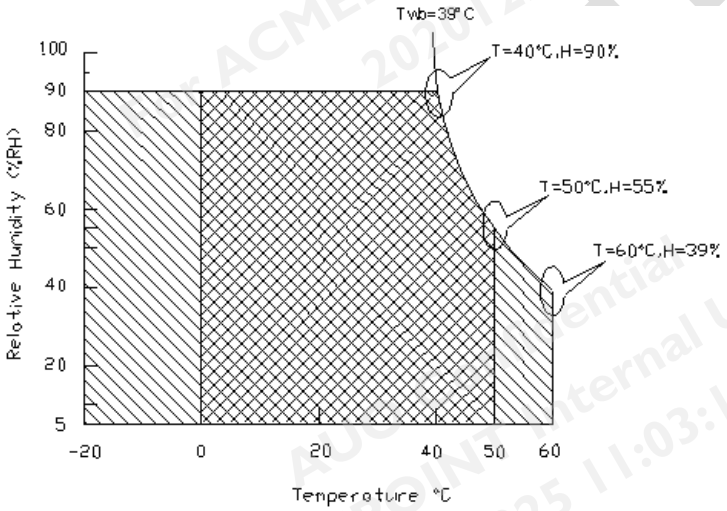

Operating Range Storage Range +

For ACMEPOINT internal use only - provided by davidcwhsing on 2020/12/25

2.3 Optical Characteristics

The optical characteristics are measured on the following test condition.

Test Condition:

1. Equipment setup: Please refer to ***Note 2-2***.
2. Panel Lighting time: 30 minutes
3. VDD=5.0V, Fv=60Hz,Is= 65 mA,Ta=25°C

Symbol	Description		Min.	Typ.	Max.	Unit	Remark
L_w	White Luminance (Center of screen)		200	250	-	[cd/m2]	***Note 2-2*** *By SR-3*
L_{uni}	Luminance Uniformity (9 points)		75	80	-	[%]	***Note 2-3*** *By SR-3*
CR	Contrast Ratio (Center of screen)		600	1000	-	-	***Note 2-4*** *By SR-3*
θ_R	Horizontal Viewing Angle (CR=10)	Right	80	89	-	[degree]	***Note 2-5*** *By SR-3*
θ_L		Left	80	89	-		
Φ_H	Vertical Viewing Angle (CR=10)	Up	80	89	-		
Φ_L		Down	80	89	-		
θ_R	Horizontal Viewing Angle (CR=5)	Right	80	89	-		
θ_L		Left	80	89	-		
Φ_H	Vertical Viewing Angle (CR=5)	Up	80	89	-		
Φ_L		Down	80	89	-		
T_{GTG}	Response Time	Gray To Gray	-	14	-	[msec]	***Note 2-6*** *By TRD-100*
R_x	Color Coordinates (CIE 1931)	Red x	0.617	0.647	0.677	-	*By SR-3*
R_y		Red y	0.304	0.334	0.364		
G_x		Green x	0.290	0.320	0.350		
G_y		Green y	0.595	0.625	0.655		
B_x		Blue x	0.125	0.155	0.185		
B_y		Blue y	0.020	0.050	0.080		
W_x		White x	0.283	0.313	0.343		
W_y		White y	0.299	0.329	0.359		
CT	Crosstalk		-	-	1.5	[%]	***Note 2-7*** *By SR-3*

Note 2-2: Equipment setup :

For ACMEPOINT internal use only - provided by davidcwhsing on 2020/12/25

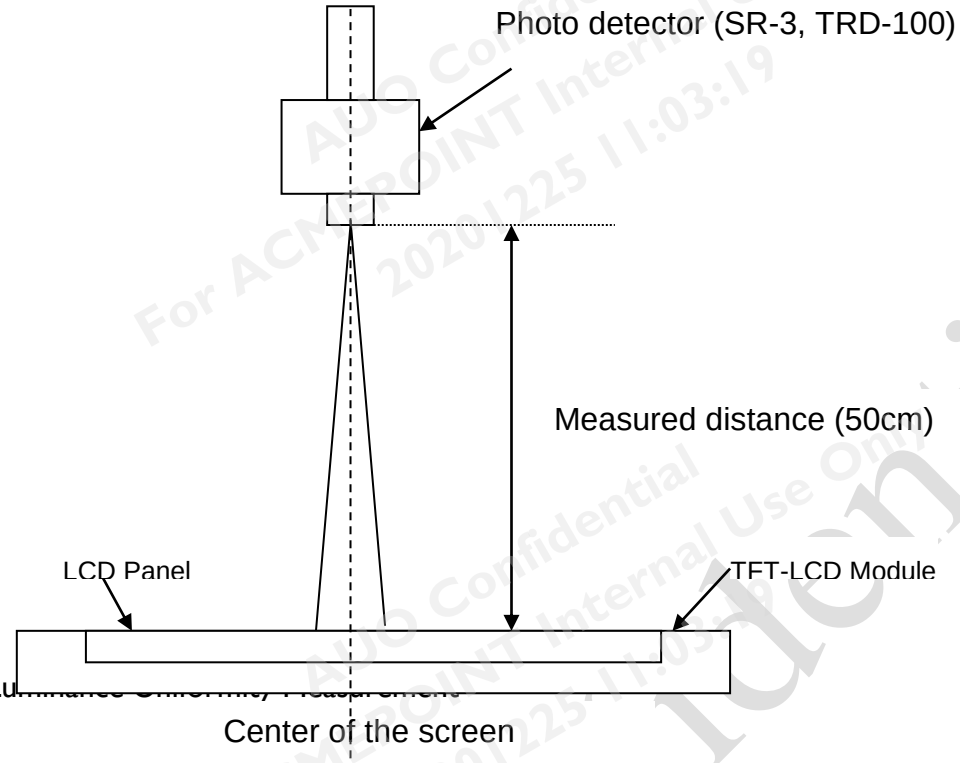

Note 2-3: Luminance Uniformity Measurement

Definition:

$$\text{Luminance Uniformity} = \frac{\text{Minimum Luminance of 9 Points (P1 ~ P9)}}{\text{Maximum Luminance of 9 Points (P1 ~ P9)}}$$

a.Test pattern:White Pattern

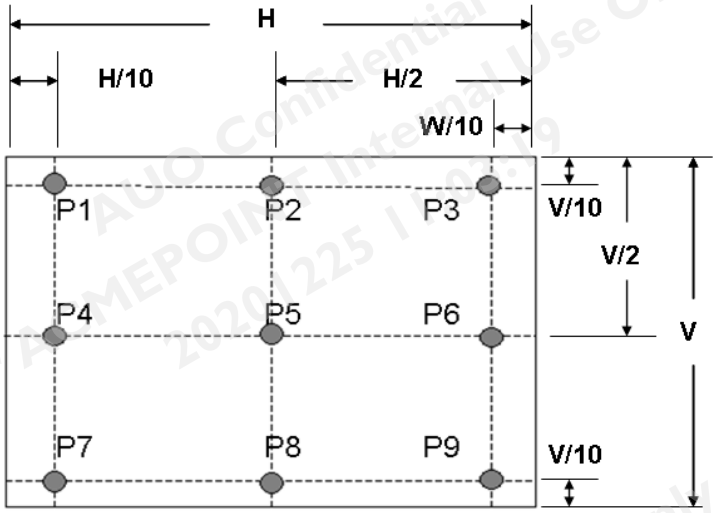

Note 2-4: Contrast Ratio Measurement

Definition:

For ACMEPOINT internal use only - provided by davidcwhsing on 2020/12/25

$$\text{Contrast Ratio} = \frac{\text{Luminance of White pattern}}{\text{Luminance of Black pattern}}$$

a. Measured position: Center of screen (P5) & perpendicular to the screen (θ=Φ=0°)

Note 2-5: Viewing angle measurement

Definition: The angle at which the contrast ratio is greater than 10 & 5 .

a. Horizontal view angle: Divide to left & right (θ_L & θ_R)

Vertical view angle: Divide to up & down (Φ_H &Φ_L)

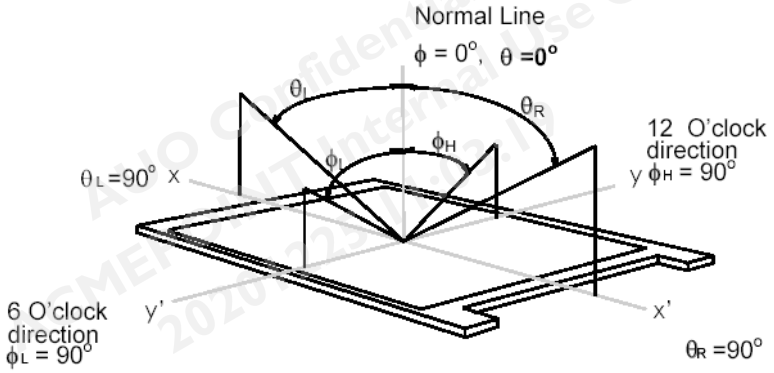

Note 2-6: Response time measurement

The output signals of photo detector are measured when the input signals are changed from "Gray level A" to "Gray level B" (falling time, TF), and from "Gray level B" to "Gray level A" (rising time, TR), respectively. The response time is interval between the 10% and 90% of optical response.

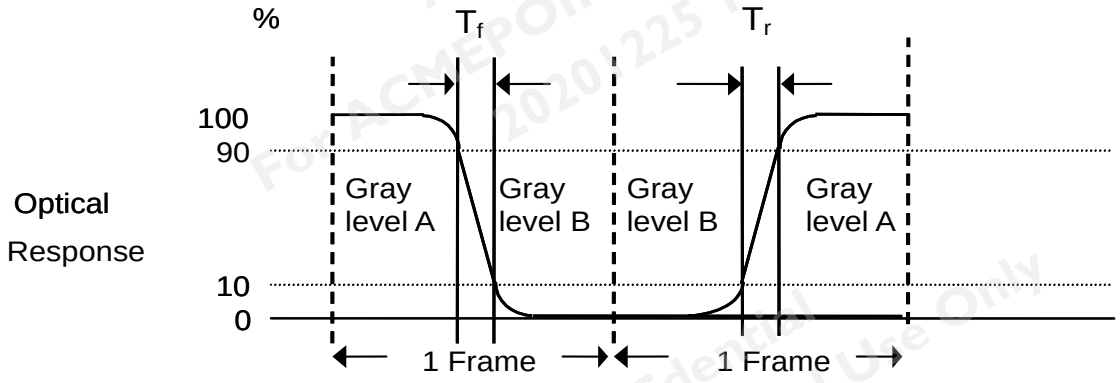

The gray to gray response time is defined as the following table.

Gray Level to Gray Level	Target gray level

For ACMEPOINT internal use only - provided by davidcwhsing on 2020/12/25

		L0	L63	L127	L191	L255
Start gray level	L0					
	L63					
	L127					
	L191					
	L255					

■ T_{GTG_typ} is the total average time at rising time and falling time of gray to gray.

Note 2-7: Crosstalk measurement

Definition:

$CT = Max. (CT_H, CT_V)$;

Where

a.Maximum Horizontal Crosstalk :

$CT_H = Max. (| Y_{BL} – Y_{AL} | / Y_{AL} \times 100\ \%, | Y_{BR} – Y_{AR} | / Y_{AR} \times 100\ \%)$;

Maximum Vertical Crosstalk:

$CT_V = Max. (| Y_{BU} – Y_{AU} | / Y_{AU} \times 100\ \%, | Y_{BD} – Y_{AD} | / Y_{AD} \times 100\ \%)$;

b. Y_{AU}, Y_{AD}, Y_{AL}, Y_{AR} = Luminance of measured location without Black pattern

Y_{BU}, Y_{BD}, Y_{BL}, Y_{BR} = Luminance of measured location with Black pattern

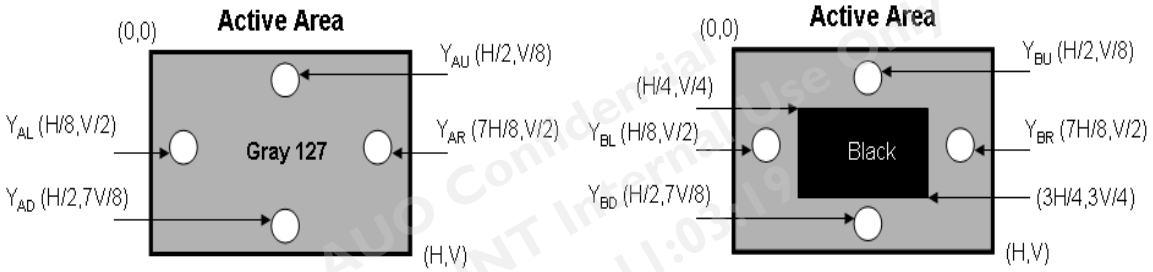

2.4 Mechanical Characteristics

Symbol	Description	Min.	Max.	Unit	Remark
P_{bc}	Backside Compression	2.5	-	[Kgf]	***Note 2-8***

Note 2-8: Test Method:

The point is at a distance from right-downside 25mm x 25mm defined as the Start Point of Measure Points, and the point is at a distance 25mm from left-side & around 10mm from PCB

For ACMEPOINT internal use only - provided by davidcwhsing on 2020/12/25

defined as the End Point.

Align 50mm x 50mm block from Start Point on the Bezel Back, and the corners of each block are Measure Points.

If the distance from the last block to each side of the End Point ≧ 25mm, add other blocks to make sure that most area of Bezel Back can be measured.

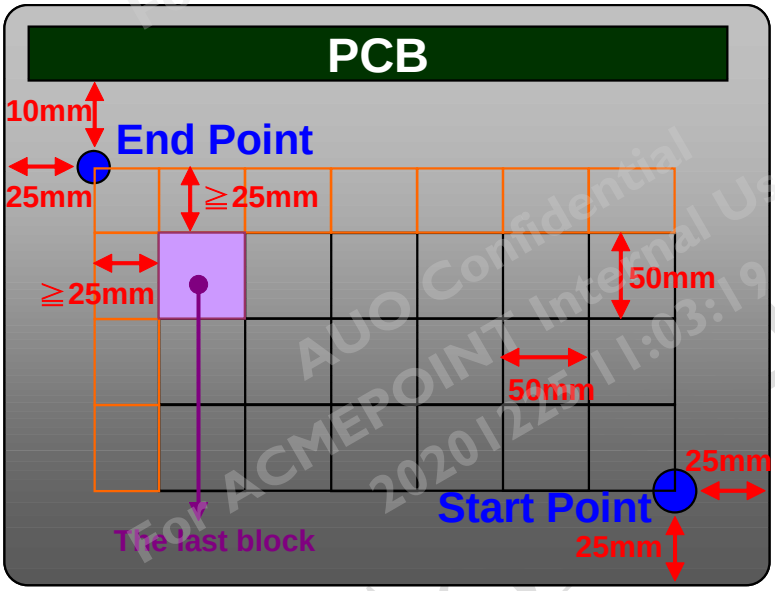

For ACMEPOINT internal use only - provided by davidcwhsing on 2020/12/25

3 TFT-LCD Module

3.1 Block Diagram

The following shows the block diagram of the 21.5 inch Color TFT-LCD Module.

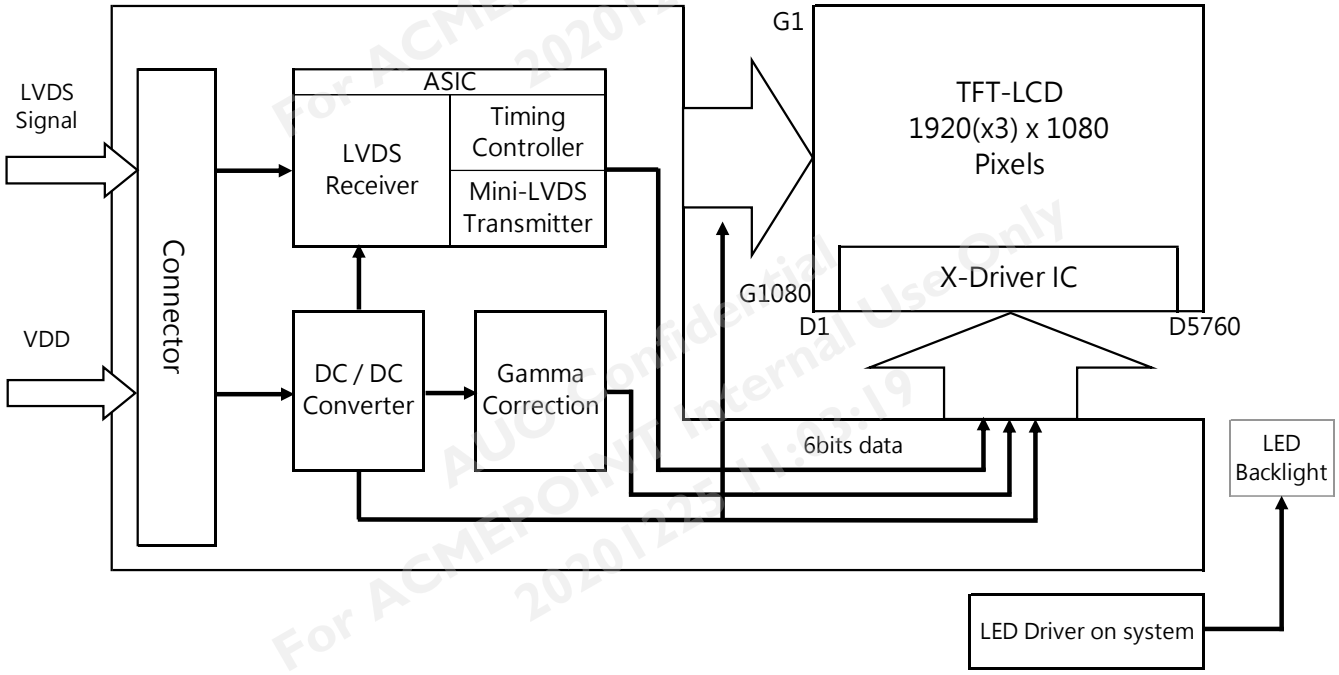

AUO Confidential
For ACMEPOINT Internal Use Only
20201225 11:03:19

For ACMEPOINT internal use only - provided by davidcwhsing on 2020/12/25

3.2 Interface Connection

3.2.1 Connector Type

TFT-LCD Connector	Manufacturer	P-TWO	STM
	Part Number	187034-3009	MSBKT2407P30HB
Mating Connector	Manufacturer	JAE	
	Part Number	FI-X30H (Unlocked Type)	

3.2.2 Connector Pin Assignment

PIN #	Symbol	Description	Remark
1	RxO0-	Negative LVDS differential data input (Odd data)	
2	RxO0+	Positive LVDS differential data input (Odd data)	
3	RxO1-	Negative LVDS differential data input (Odd data)	
4	RxO1+	Positive LVDS differential data input (Odd data)	
5	RxO2-	Negative LVDS differential data input (Odd data)	
6	RxO2+	Positive LVDS differential data input (Odd data)	
7	GND	Ground	
8	RxOCLK-	Negative LVDS differential clock input (Odd clock)	
9	RxOCLK+	Positive LVDS differential clock input (Odd clock)	
10	RxO3-	Negative LVDS differential data input (Odd data)	
11	RxO3+	Positive LVDS differential data input (Odd data)	
12	RxE0-	Negative LVDS differential data input (Even data)	
13	RxE0+	Positive LVDS differential data input (Even data)	
14	GND	Ground	
15	RxE1-	Negative LVDS differential data input (Even data)	
16	RxE1+	Positive LVDS differential data input (Even data)	
17	GND	Ground	
18	RxE2-	Negative LVDS differential data input (Even data)	
19	RxE2+	Positive LVDS differential data input (Even data)	
20	RxECLK-	Negative LVDS differential clock input (Even clock)	
21	RxECLK+	Positive LVDS differential clock input (Even clock)	
22	RxE3-	Negative LVDS differential data input (Even data)	
23	RxE3+	Positive LVDS differential data input (Even data)	
24	GND	Ground	
25	NC	No connection (for AUO test only. Do not connect)	
26	NC	No connection (for AUO test only. Do not connect)	

For ACMEPOINT internal use only - provided by davidcwhsing on 2020/12/25

27	NC	No connection (for AUO test only. Do not connect)	
28	VDD	Power Supply Input Voltage	
29	VDD	Power Supply Input Voltage	
30	VDD	Power Supply Input Voltage	

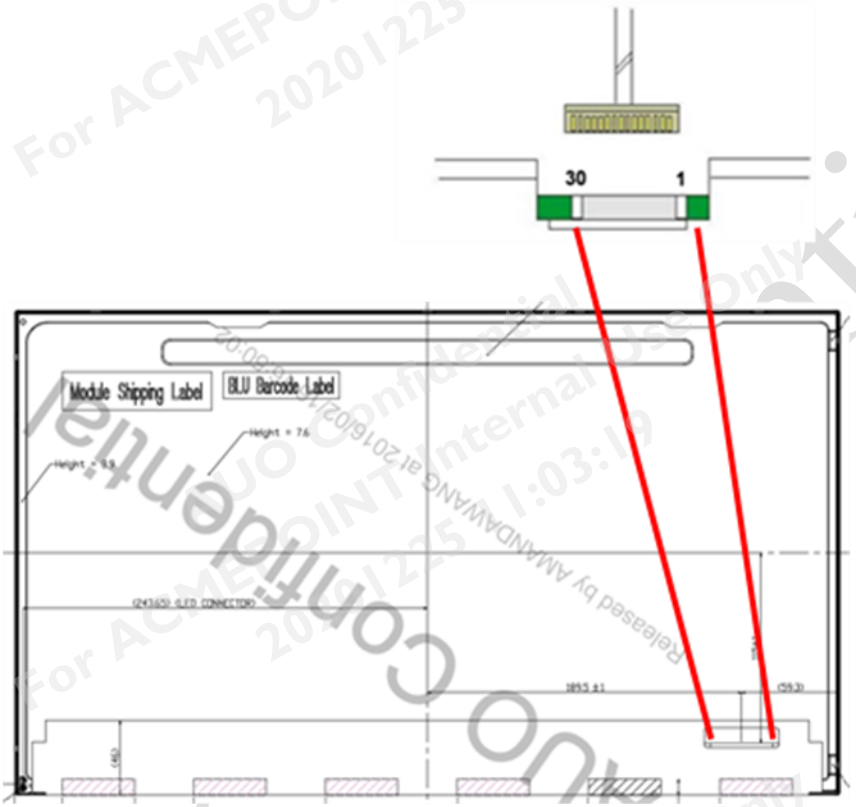

AUO Confidential
AUO Confidential Use Only
For ACMEPOINT Internal Use Only
20201225 11:03:19

For ACMEPOINT internal use only - provided by davidcwhsing on 2020/12/25

3.3 Electrical Characteristics

3.3.1 Absolute Maximum Rating

Permanent damage may occur if exceeding the following maximum rating.

Symbol	Description	Min	Max	Unit	Remark
VDD	Power Supply Input Voltage	GND-0.3	6.0	[Volt]	Ta=25°C

3.3.2 Recommended Operating Condition

Symbol	Description	Min	Typ	Max	Unit	Remark
VDD	Power supply Input voltage	4.5	5.0	5.5	[Volt]	
IDD	Power supply Input Current (RMS)	-	0.46	0.55	[A]	VDD= 5.0V, White Pattern, Fv=60Hz
			0.50	0.60	[A]	VDD= 5.0V, White Pattern, Fv=75Hz
PDD	VDD Power Consumption	-	2.30	2.75	[Watt]	VDD= 5.0V, White Pattern, Fv=60Hz
			2.50	3.00	[Watt]	VDD= 5.0V, White Pattern, Fv=75Hz
IRush	Inrush Current	-	-	3.0	[A]	***Note 3-1***
VDDrp	Allowable VDD Ripple Voltage	-	-	500	[mV]	VDD= 5.0V, White Pattern, Fv=75Hz

Note 3-1: Inrush Current measurement:

Test circuit:

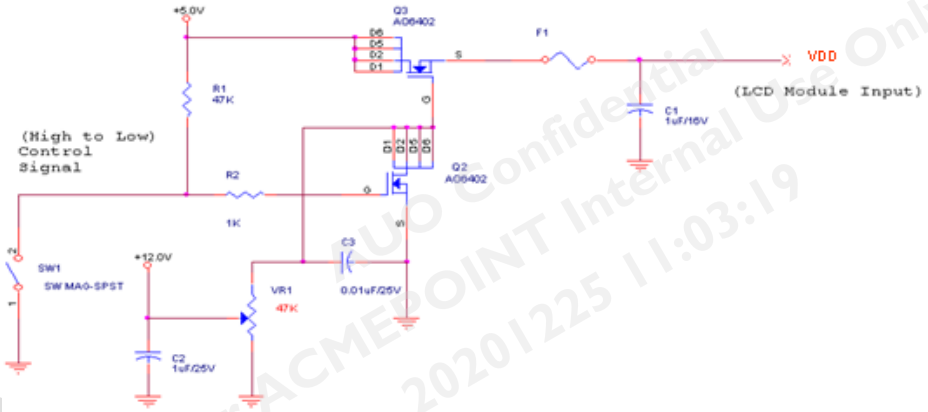

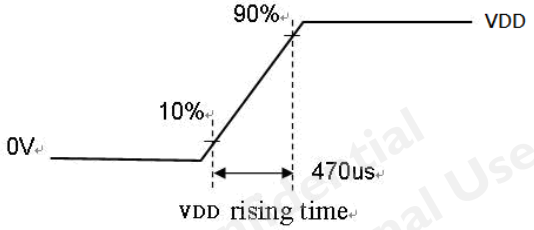

The duration of VDD rising time: 470us.

For ACMEPOINT internal use only - provided by davidcwhsing on 2020/12/25

3.4 Signal Characteristics

3.4.1 LCD Pixel Format

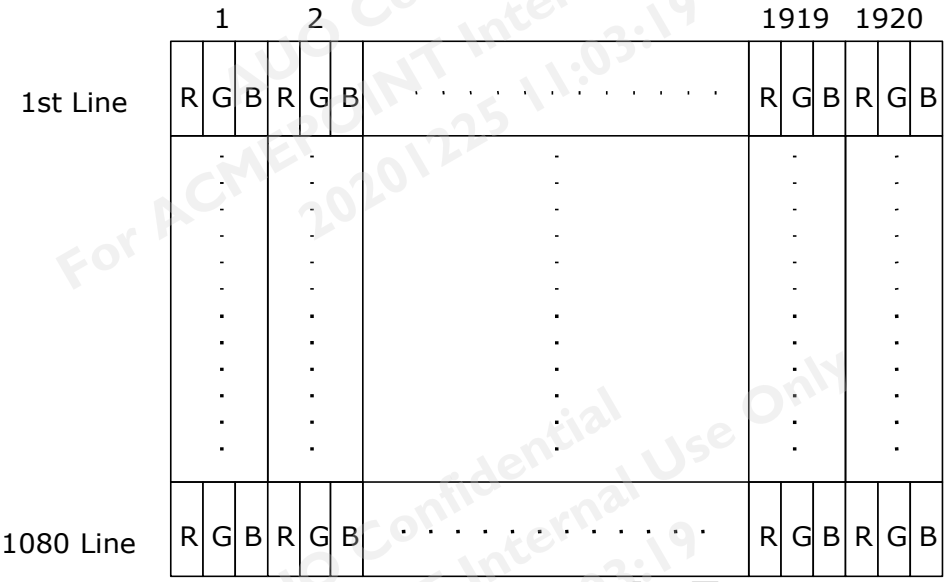

3.4.2 LVDS Data Format

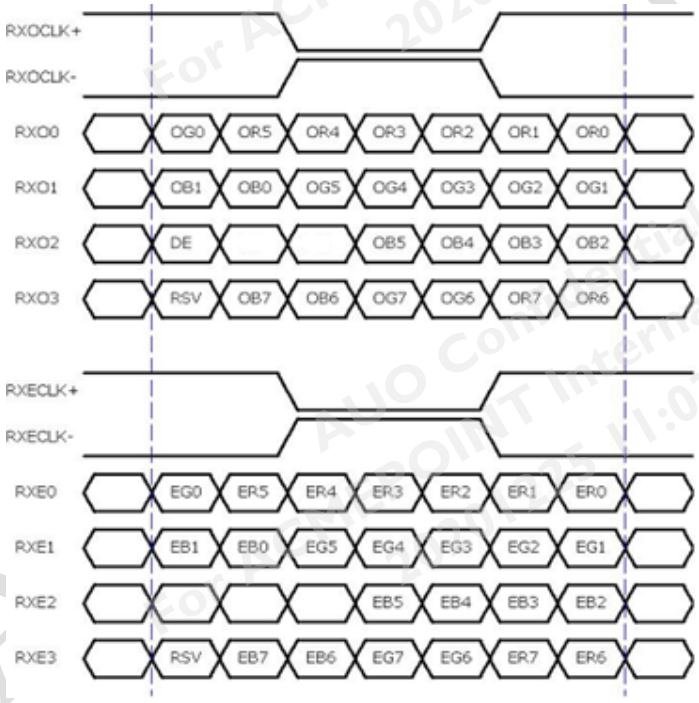

8 Bit Color Bit Order			
MSB	R7	G7	B7
	R6	G6	B6
	R5	G5	B5
	R4	G4	B4
	R3	G3	B3
	R2	G2	B2
	R1	G1	B1
LSB	R0	G0	B0

Note 3-2:

a. O = "Odd Pixel Data" E = "Even Pixel Data"

b. Refer to 3.4.1 LCD pixel format, the 1st data is 1 (Odd Pixel Data), the 2nd data is 2 (Even Pixel Data) and the last data is 1920 (Even Pixel Data).

For ACMEPOINT internal use only - provided by davidcwhsing on 2020/12/25

3.4.3 Color versus Input Data

The following table is for color versus input data (8bit). The higher the gray level, the brighter the color.

Color	Gray Level	Color Input Data																								Remark
		RED data (MSB:R7, LSB:R0)								GREEN data (MSB:G7, LSB:G0)								BLUE data (MSB:B7, LSB:B0)								
		R7	R6	R5	R4	R3	R2	R1	R0	G7	G6	G5	G4	G3	G2	G1	G0	B7	B6	B5	B4	B3	B2	B1	B0	
Black	-	0	0	0	0	0	0	0	0	0	0	0	0	0	0	0	0	0	0	0	0	0	0	0	0	
White	-	1	1	1	1	1	1	1	1	1	1	1	1	1	1	1	1	1	1	1	1	1	1	1	1	
Gray 127	-	0	1	1	1	1	1	1	1	0	1	1	1	1	1	1	1	0	1	1	1	1	1	1	1	
Red	L0	0	0	0	0	0	0	0	0	0	0	0	0	0	0	0	0	0	0	0	0	0	0	0	0	Black
	:	:	:	:	:	:	:	:	:	:	:	:	:	:	:	:	:	:	:	:	:	:	:	:	:	
	L255	1	1	1	1	1	1	1	1	0	0	0	0	0	0	0	0	0	0	0	0	0	0	0	0	
Green	L0	0	0	0	0	0	0	0	0	0	0	0	0	0	0	0	0	0	0	0	0	0	0	0	0	Black
	:	:	:	:	:	:	:	:	:	:	:	:	:	:	:	:	:	:	:	:	:	:	:	:	:	
	L255	0	0	0	0	0	0	0	0	1	1	1	1	1	1	1	1	0	0	0	0	0	0	0	0	
Blue	L0	0	0	0	0	0	0	0	0	0	0	0	0	0	0	0	0	0	0	0	0	0	0	0	0	Black
	:	:	:	:	:	:	:	:	:	:	:	:	:	:	:	:	:	:	:	:	:	:	:	:	:	
	L255	0	0	0	0	0	0	0	0	0	0	0	0	0	0	0	0	1	1	1	1	1	1	1	1	

AUO Confidential
For ACMEPOINT Internal Use Only
20201225 11:03:19

For ACMEPOINT internal use only - provided by davidcwhsing on 2020/12/25

3.4.4 LVDS Specification

a. DC Characteristics:

Symbol	Description	Min	Typ	Max	Units	Condition
V_{TH}	LVDS Differential Input High Threshold	-	-	+100	[mV]	V_{CM} = 1.2V
V_{TL}	LVDS Differential Input Low Threshold	-100	-	-	[mV]	V_{CM} = 1.2V
$\lvert V_{ID} \rvert$	LVDS Differential Input Voltage	100	-	600	[mV]	
V_{CM}	LVDS Common Mode Voltage	+1.0	+1.2	+1.5	[V]	V_{TH}-V_{TL} = 200mV

LVDS Signal Waveform:

Use RxOCLK- & RxOCLK+ as example.

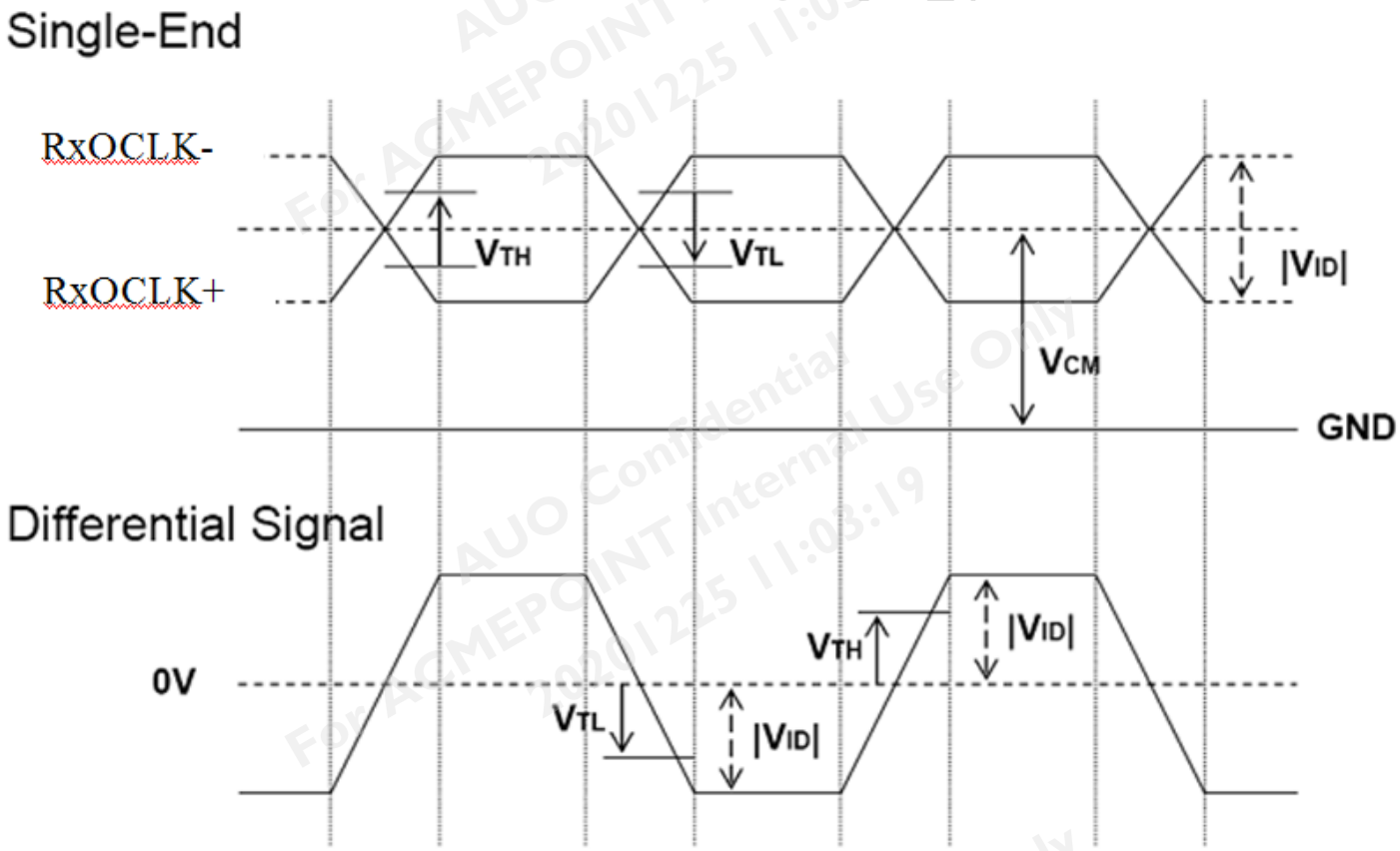

For ACMEPOINT internal use only - provided by davidcwhsing on 2020/12/25

b. AC Characteristics:

Symbol	Description	Min	Max	Unit	Remark
F_{DEV}	Maximum deviation of input clock frequency during Spread Spectrum	-	± 3	%	
F_{MOD}	Maximum modulation frequency of input clock during Spread Spectrum	-	200	KHz	

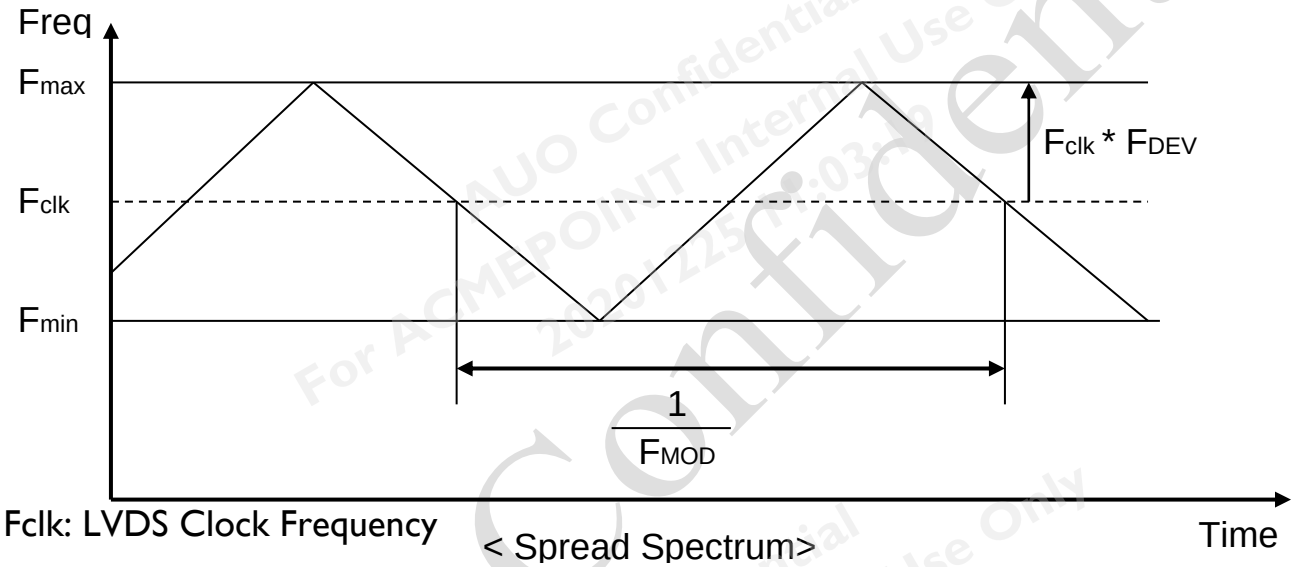

Fclk: LVDS Clock Frequency

< Spread Spectrum>

AUO Confidential
For ACMEPOINT Internal Use Only
20201225 11:03:19

For ACMEPOINT internal use only - provided by davidcwhsing on 2020/12/25

3.4.5 Input Timing Specification

It only support DE mode, and the input timing are shown as the following table.

Symbol	Description		Min.	Typ.	Max.	Unit	Remark
Tv	Vertical Section	Period	1094	1130	1836	Th	
Tdisp (v)		Active	1080	1080	1080	Th	
Tblk (v)		Blanking	14	50	756	Th	
Fv		Frequency	49	60	76	Hz	
Th	Horizontal Section	Period	1000	1050	1678	Tclk	
Tdisp (h)		Active	960	960	960	Tclk	
Tblk (h)		Blanking	40	90	718	Tclk	
Fh		Frequency	53.7	67.8	90.0	KHz	***Note 3-3***
Tclk	LVDS Clock	Period	11.2	14.0	18.6	ns	1/Fclk
Fclk		Frequency	53.7	71.2	90.0	MHz	***Note 3-4***

Note 3-3: The equation is listed as following. Please don't exceed the above recommended value.

Fh (Min.) = Fclk (Min.) / Th (Min.);

Fh (Typ.) = Fclk (Typ.) / Th (Typ.);

Fh (Max.)= Fclk (Max.) / Th (Min.);

Note 3-4: The equation is listed as following. Please don't exceed the above recommended value.

Fclk (Min.) = Fv (Min.) x Th (Min.) x Tv (Min.);

Fclk (Typ.) = Fv (Typ.) x Th (Typ.) x Tv (Typ.);

Fclk (Max.) = Fv (Max.) x Th (Typ.) x Tv (Typ.);

AUO Confidential
For ACMEPOINT Internal Use Only
20201225 11:03:19

For ACMEPOINT internal use only - provided by davidcwhsing on 2020/12/25

3.4.6 Input Timing Diagram

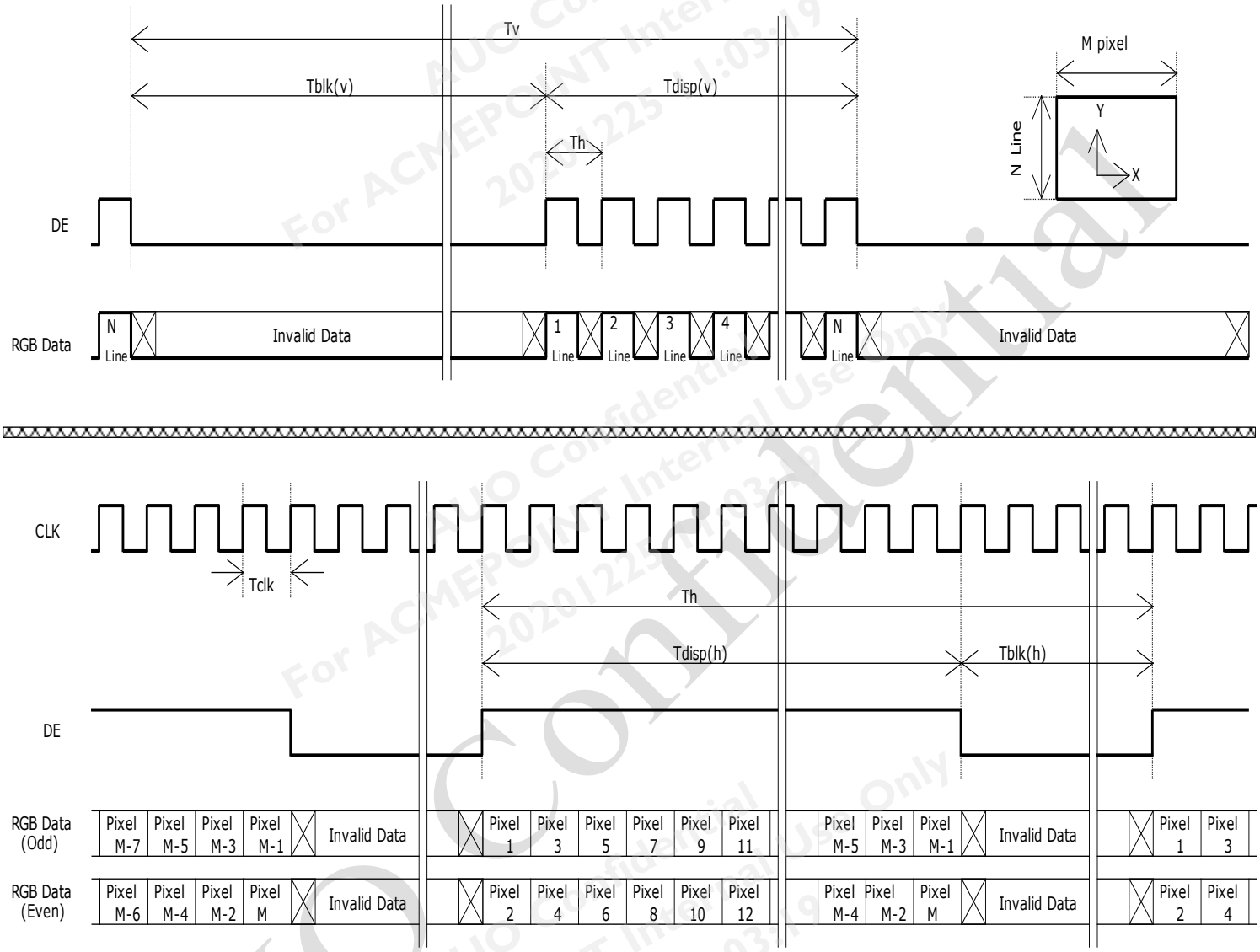

AUO Confidential
For ACMEPOINT Internal Use Only
20201225 11:03:19

For ACMEPOINT internal use only - provided by davidcwhsing on 2020/12/25

3.5 Power ON/OFF Sequence

VDD power,LVDS signal and backlight on/off sequence are as following. LVDS signals from any system shall be Hi-Z state when VDD is off.

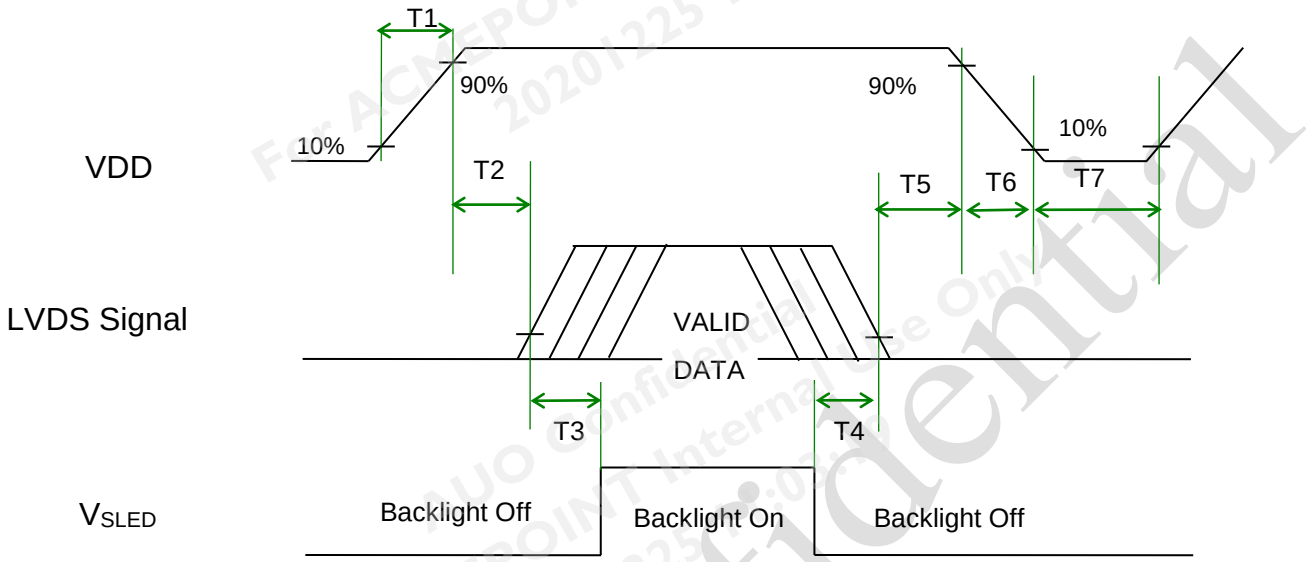

Power Sequence Timing

Symbol	Value			Unit	Remark
	Min.	Typ.	Max.		
T1	0.5	-	10	[ms]	
T2	0	-	50	[ms]	
T3	500	-	-	[ms]	
T4	100	-	-	[ms]	
T5	0		50	[ms]	***Note 3-5*** ***Note 3-6***
T6	0	-	200	[ms]	***Note 3-6*** ***Note 3-7***
T7	1000	-	-	[ms]	

Note 3-5 : Recommend setting T5 = 0ms to avoid electronic noise when VDD is off.
Note 3-6 : During T5 and T6 period , please keep the level of input LVDS signals with Hi-Z state.
Note 3-7 : Voltage of VDD must decay smoothly after power-off.(customer system decide this value)

For ACMEPOINT internal use only - provided by davidcwhsing on 2020/12/25

4 Backlight Unit

4.1 Block Diagram

The following shows the block diagram of the 21.5 inch Backlight Unit. And it includes 48 pcs LED in the LED light bar. (4 strings and 12 pcs LED of one string).

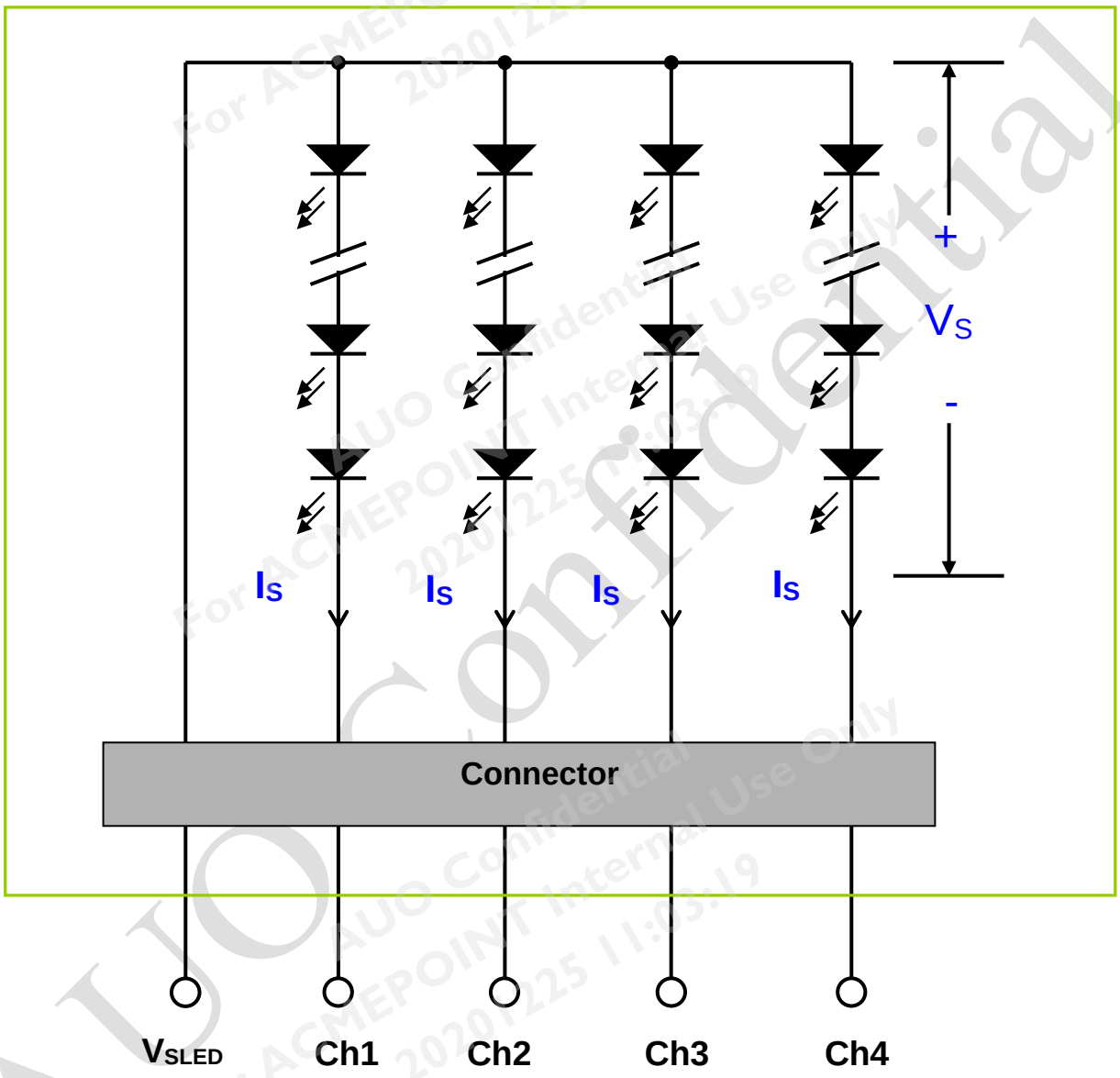

AUO Confidential
For ACMEPOINT Internal Use Only
2020/12/25 11:03:19

For ACMEPOINT internal use only - provided by davidcwhsing on 2020/12/25

4.2 Interface Connection

4.2.1 Connector Type

Backlight Connector	Manufacturer	ENTERY
	Part Number	3707K-S06N-21R
Mating Connector	Manufacturer	ENTERY
	Part Number	H112K-P06N-00B (Non-Locking type) H112K-P06N-13B (Locking type)

Backlight Connector dimension:

$H \times V \times D = 13.9 \times 3.00 \times 4.25, Pitch = 1.0(unit = mm)$

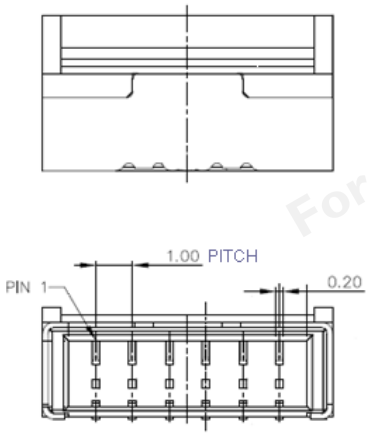

Mating Connector dimension:

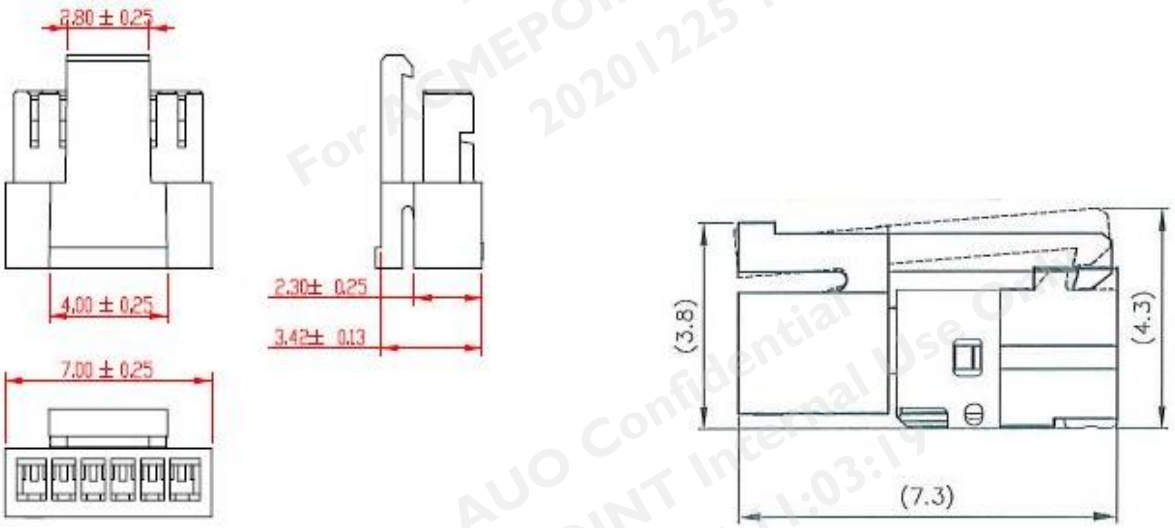

For ACMEPOINT internal use only - provided by davidcwhsing on 2020/12/25

4.2.2 Connector Pin Assignment

Pin#	Symbol	Description	Remark
1	Ch1	LED Current Feedback Terminal (Channel 1)	
2	Ch2	LED Current Feedback Terminal (Channel 2)	
3	V_{SLED}	LED Power Supply Voltage Input Terminal	
4	V_{SLED}	LED Power Supply Voltage Input Terminal	
5	Ch3	LED Current Feedback Terminal (Channel 3)	
6	Ch4	LED Current Feedback Terminal (Channel 4)	

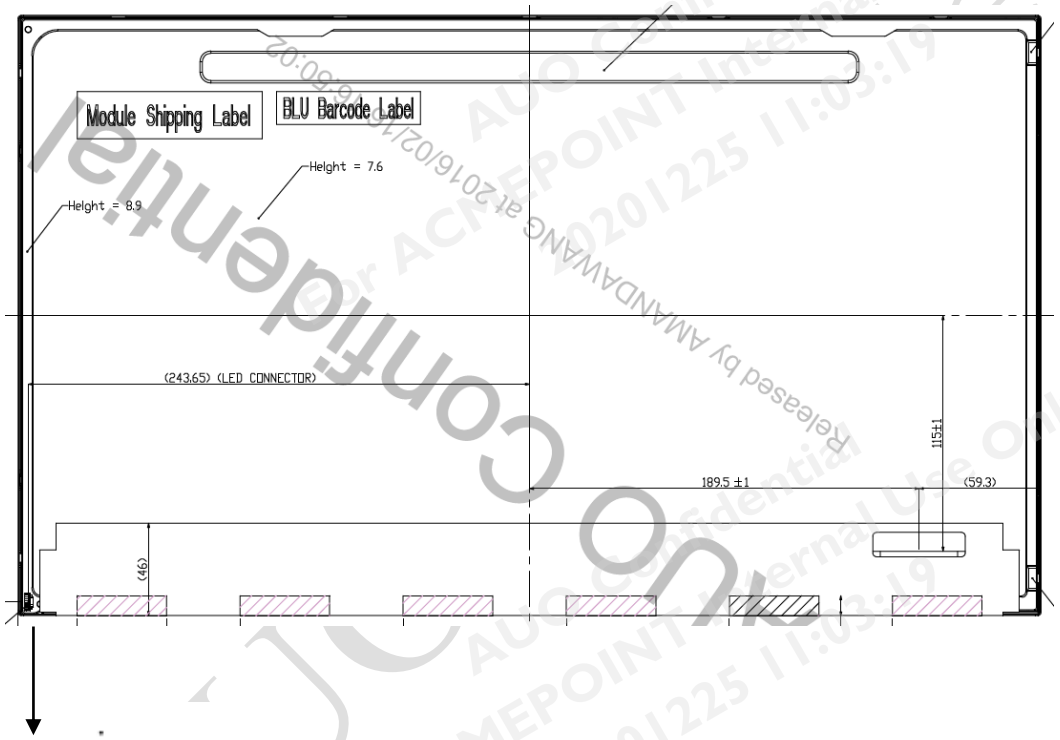

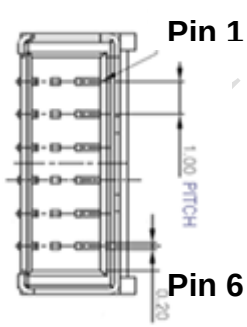

For ACMEPOINT internal use only - provided by davidcwhsing on 2020/12/25

4.3 Electrical Characteristics

4.3.1 Absolute Maximum Rating

Permanent damage may occur if exceeding the following maximum rating.

(Ta=25°C)

Symbol	Description	Min	Max	Unit	Remark
Is	LED String Current	0	90	[mA]	100% duty ratio
			150	[mA]	*Duty ratio≦ 10%* *Pulse time=10 ms*

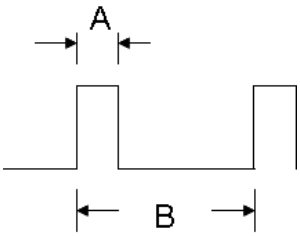

Duty ratio= (A / B) X 100% ; (A: Pulse time, B: Period)

4.3.2 Recommended Operating Condition

(Ta=25℃)

Symbol	Description	Min.	Typ.	Max.	Unit	Remark
Is	LED String Current	-	65	72	[mA]	100% duty ratio of LED chip, ***Note 4-6***
Vs	LED String Voltage	33.6	34.8	36	[Volt]	Is=65mA @ 100% duty ratio; ***Note 4-1, Note 4-5, Note 4-7***
ΔVs	Maximum Vs Voltage Deviation of light bar	-	-	2.4	[Volt]	Is=65mA @ 100% duty ratio; ***Note 4-2***
P_{BLU}	LED Light Bar Power Consumption	-	9.1	9.4	[Watt]	***Note 4-3***
LT_{LED}	LED Life Time	30,000	-	-	[Hour]	***Note 4-4***
OVP	Over Voltage Protection in system board	110% Vsmax	-	-	[Volt]	***Note 4-5***

For ACMEPOINT internal use only - provided by davidcwhsing on 2020/12/25

Note 4-1: Vs (Typ.) = V_F (Typ.) X LED No. (one string);

a. V_F: LED chip forward voltage, V_F (Min.)=2.8V, V_F(Typ.)=2.9V, V_F(Max.)=3.0V

b. The same euqation to calculate Vs(Min.) & Vs (Max.) for respective V_F (Min.) & V_F(Max.);

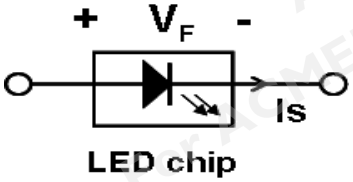

Note 4-2: ΔVs (Max.) = ΔV_F X LED No. (one string);

a. ΔV_F: LED chip forward voltage deviation; (0.2 V , each Bin of LED V_F)

Note 4-3: P_{BLU} (Typ.) = Vs (Typ.) X Is (Typ.) X 4 ; (4 is total String No. of LED Light bar)

P_{BLU} (Max.) = Vs (Max.) X Is (Typ.) X 4 ;

Note 4-4: Definition of life time:

a. Brightness of LED becomes to 50% of its original value

b. Test condition: Is = 65mA and 25°C (Room Temperature)

Note 4-5: Recommendation for LED driver power design:

Due to there are electrical property deviation in LED & monitor set system component after long time operation. AUO strongly recommend the design value of LED driver board OVP (over voltage protection) should be 10% higher than max. value of LED string voltage (Vs) at least.

Note 4-6: AUO strongly recommend "Analog Dimming" method for backlight brightness control for Wavy Noise Free. Otherwise, recommend that Dimming Control Signal (PWM Signal) should be synchronized with Frame Frequency.

Note 4-7: Ensure that the LED light bar is not subjected either forward or reverse voltage while monitor set is on standby mode or not in use.

AUO Confidential
For ACMEPOINT Internal Use Only
2020/12/25 11:03:19

For ACMEPOINT internal use only - provided by davidcwhsing on 2020/12/25

5 Reliability Test

AUO reliability test items are listed as following table. (*Bare Panel only*)

Items	Condition	Remark
Temperature Humidity Bias (THB)	Ta= 50°C, 80%RH, 300hours	
High Temperature Operation (HTO)	Ta= 50°C, 50%RH, 300hours	
Low Temperature Operation (LTO)	Ta= 0°C, 300hours	
High Temperature Storage (HTS)	Ta= 60°C, 300hours	
Low Temperature Storage (LTS)	Ta= -20°C, 300hours	
Vibration Test (Non-operation)	Acceleration: 1.5 Grms Wave: Random Frequency: 10 - 200 Hz Sweep: 30 Minutes each Axis (X, Y, Z)	
Shock Test (Non-operation)	Acceleration: 50 G Wave: Half-sine Active Time: 20 ms Direction: ±X, ±Y, ±Z (one time for each Axis)	
Thermal Shock Test (TST)	-20°C/30min, 60°C/30min, 100 cycles	***Note 5-1***
On/Off Test	On/10sec, Off/10sec, 30,000 cycles	
ESD (Electro Static Discharge)	Contact Discharge: ± 8KV, 150pF(330Ω) 1sec, 8 points, 25 times/ point.	***Note 5-2***
	Air Discharge: ± 15KV, 150pF(330Ω) 1sec 8 points, 25 times/ point.	
Altitude Test	Operation:18,000 ft Non-Operation:40,000 ft	

Note 5-1: a. A cycle of rapid temperature change consists of varying the temperature from -20°C to 60°C, and back again. Power is not applied during the test.

b. After finish temperature cycling, the unit is placed in normal room ambient for at least 4 hours before power on.

Note 5-2: EN61000-4-2, ESD class B: Certain performance degradation allowed
No data lost
Self-recoverable
No hardware failures.

For ACMEPOINT internal use only - provided by davidcwhsing on 2020/12/25

6 Shipping Label

The label is on the panel as shown below:

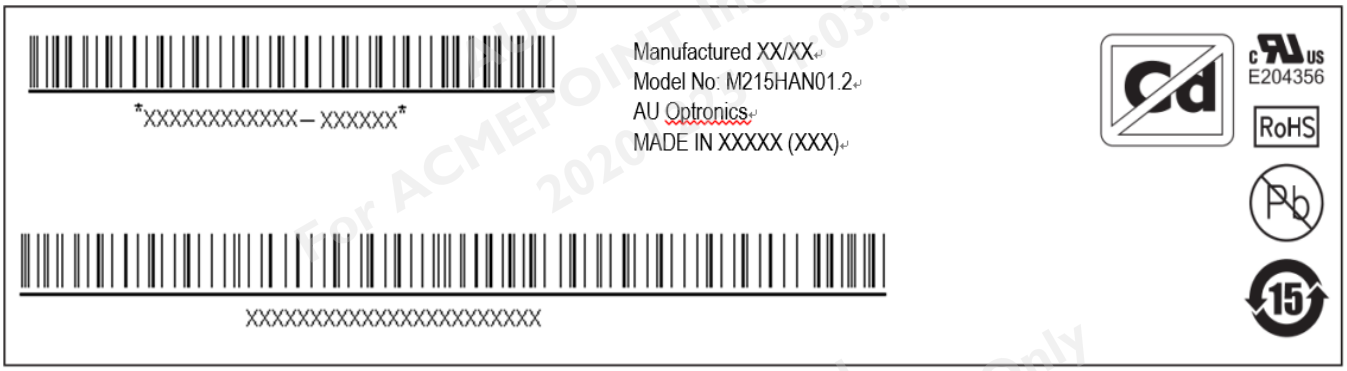

Note 6-1: For Pb Free products, AUO will add for identification.

Note 6-2: For RoHS compatible products, AUO will add for identification.

Note 6-3: For China RoHS compatible products, AUO will add for identification.

Note 6-4: The Green Mark will be presented only when the green documents have been ready by AUO Internal Green Team.

Note 6-5: The Cd free products, AUO will add for identification.

AUO Confidential
For ACMEPOINT Internal Use Only
20201225 11:03:19

For ACMEPOINT internal use only - provided by davidcwhsing on 2020/12/25

7 Mechanical Characteristics

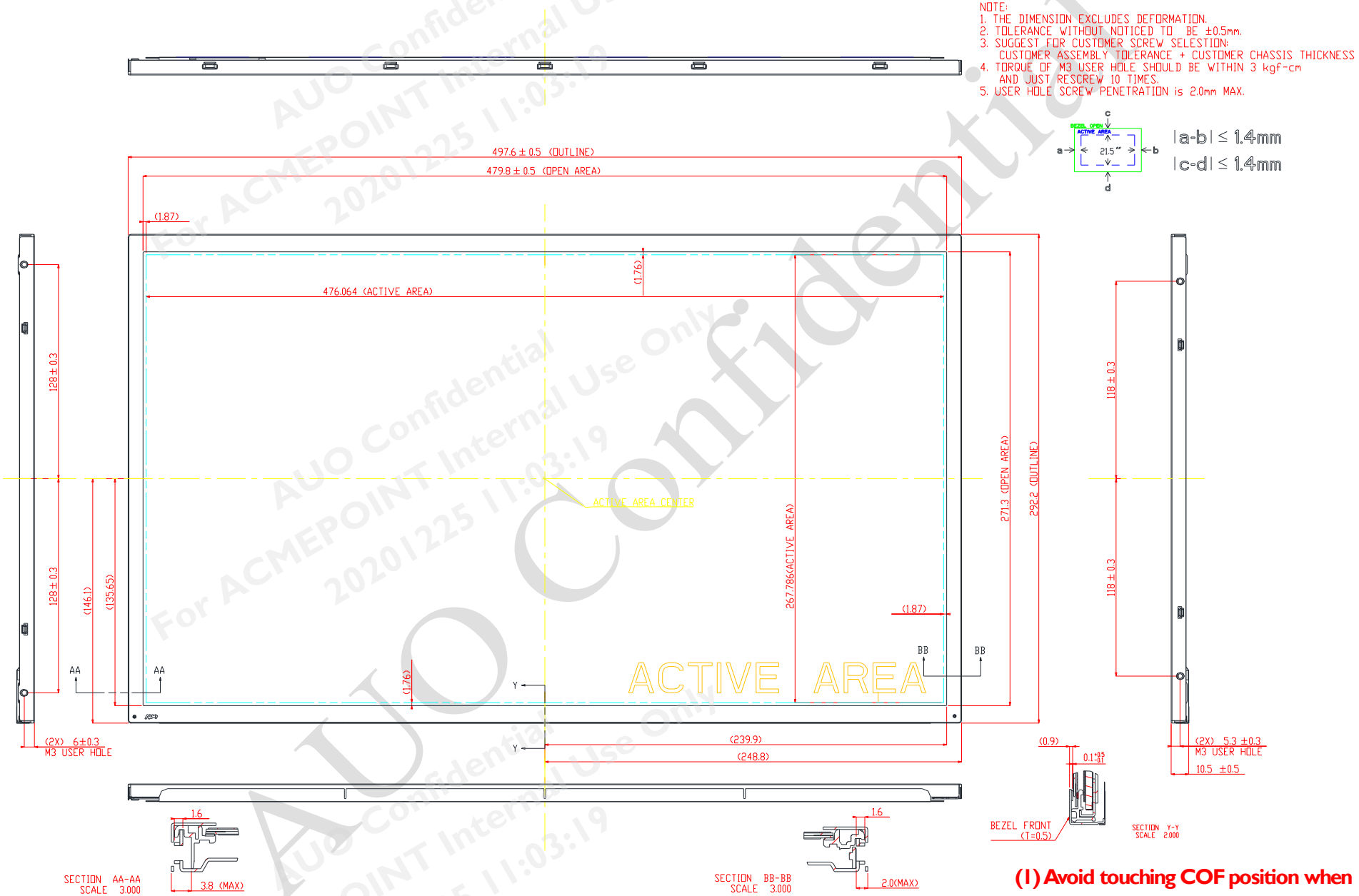

(1) Avoid touching COF position when doing mechanical design

Ver 0.1

AUO Confidential
For ACMEPOINT Internal Use Only
20201225 11:03:19
For ACMEPOINT internal use only - provided by davidcwhsing on 2020/12/25

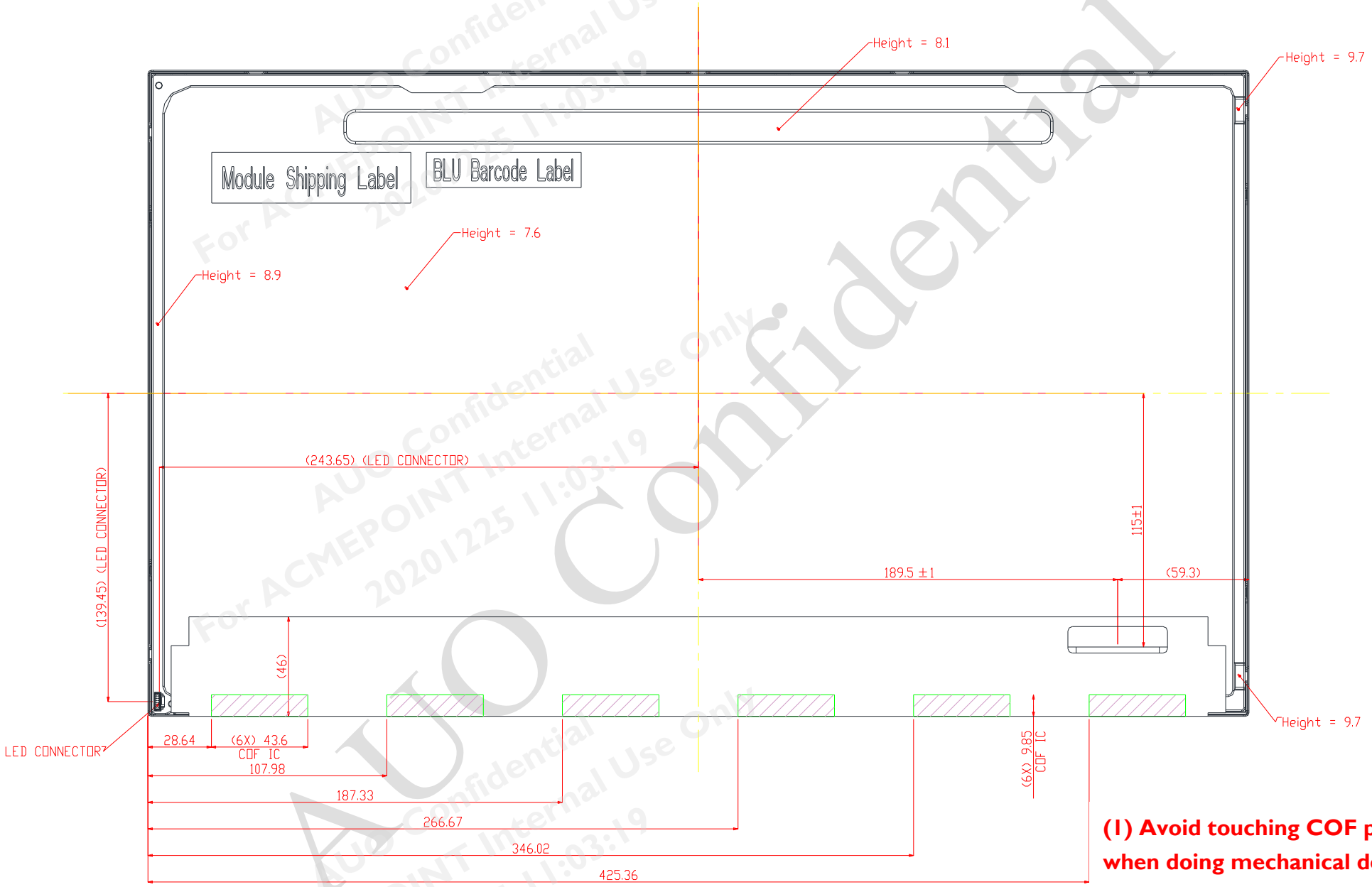

(1) Avoid touching COF position when doing mechanical design

Ver 0.1

For ACMEPOINT internal use only - provided by davidcwhsing on 2020/12/25

8 Packing Specification

8.1 Packing Flow

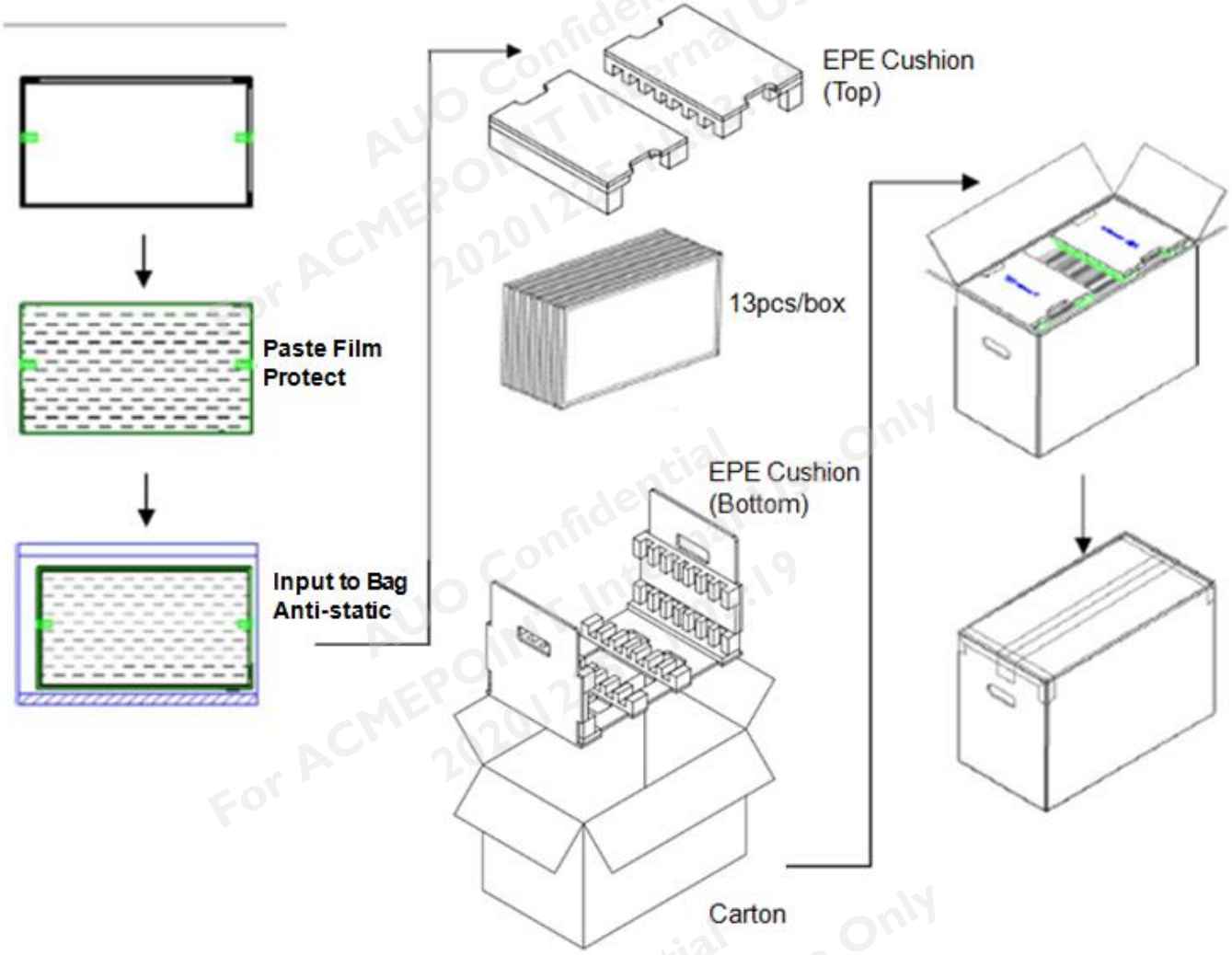

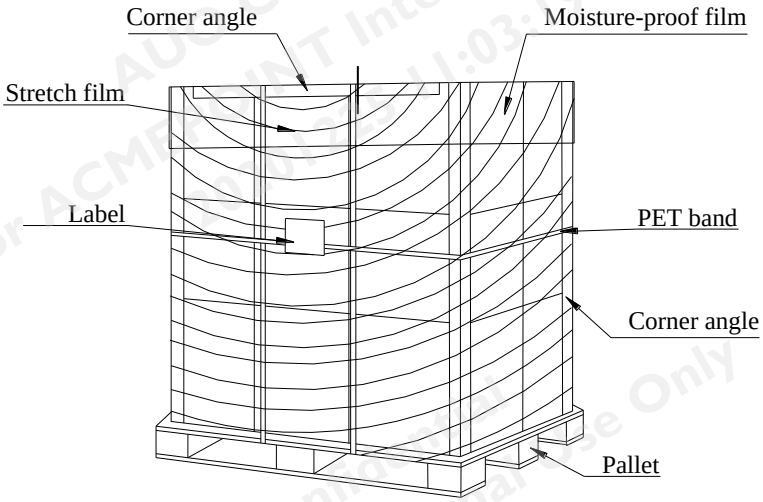

For ACMEPOINT internal use only - provided by davidcwhsing on 2020/12/25

8.2 Pallet and shipment information

Item	Specification			Remark
	Q'ty	Dimension	Weight(kg)	
Panel	1	497.6(H)mm × 292.2(V)mm × 10.5(D)mm	1.74	
Cushion	1	-	0.55	
Box	1	565(L)mm x 345(W)mm x 375(H)mm	1.40	without Panel
Packing Box	13pcs/Box	565(L)mm x 345(W)mm x 375(H)mm	24.57	with panel & Box & cushion
Pallet	1	1150(L)mm x 1070(W)mm x 132(H)mm	14.2	
Pallet after Packing	18 boxes/pallet	1150(L)mm x 1070(W)mm x 1257(H)mm	456.46	

AUO Confidential
AUO Confidential
For ACMEPOINT Internal Use Only
20201225 11:03:19

For ACMEPOINT internal use only - provided by davidcwhsing on 2020/12/25

9 Design Guide for System

9.1 The gap between LCM and system rear bracket should be bigger than 0.5mm.

9.2 The system bracket should be fixed on back cover firmly.

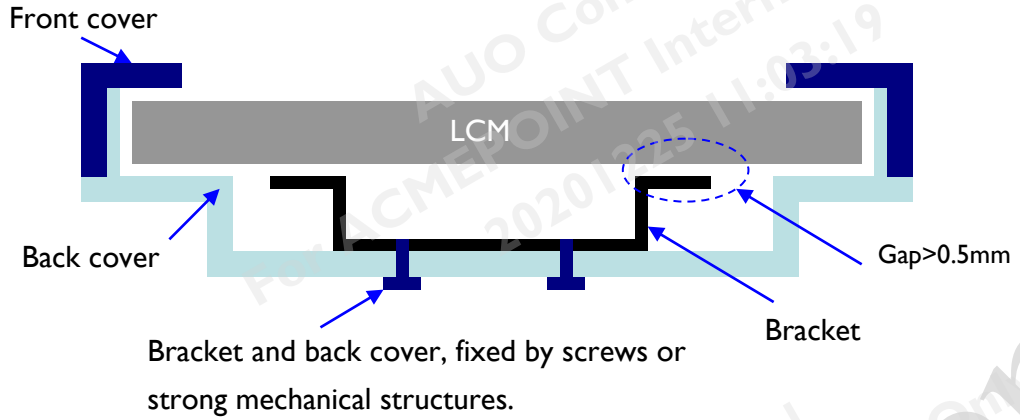

9.3 The EMI gasket should be uniform and not push panel strongly.

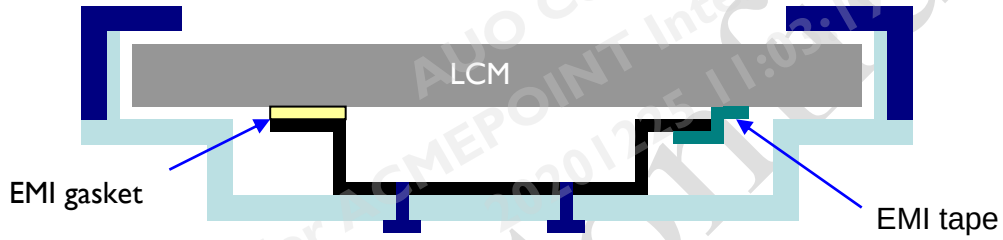

9.4 For stable assembly, the system bracket should use 4 screws to fix system and panel by dual sides.

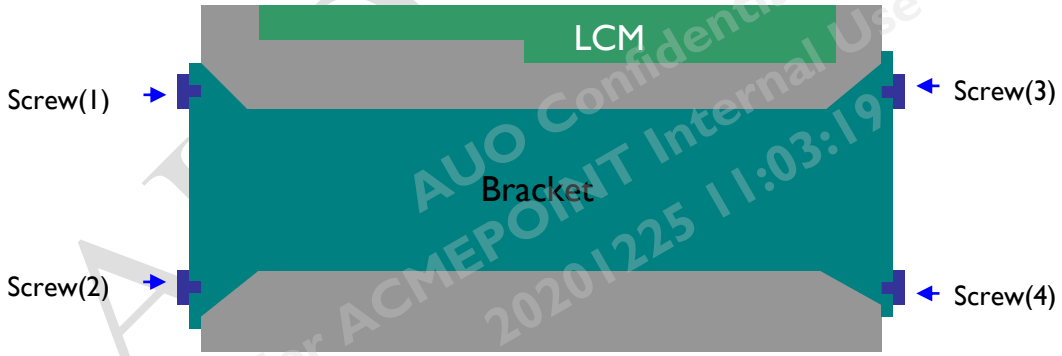

9.5 The system bracket and panel should be in parallel with having no gap after inserting screws.

Proper and Parallel gap

0 gap and no mechanical damage

AUO Confidential
For ACMEPOINT Internal Use Only
20201225 11:03:19
For ACMEPOINT internal use only - provided by davidcwhsing on 2020/12/25

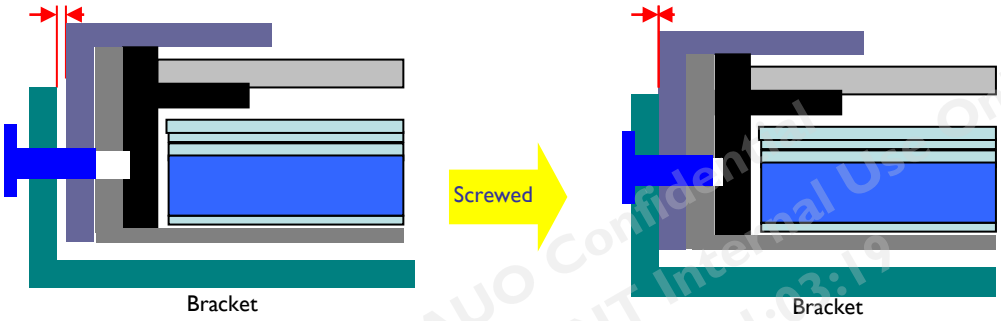

9.6 Avoid scratching LCM, the rib on system front-cover should not exceed the bottom edge of LCM's front-bezel.

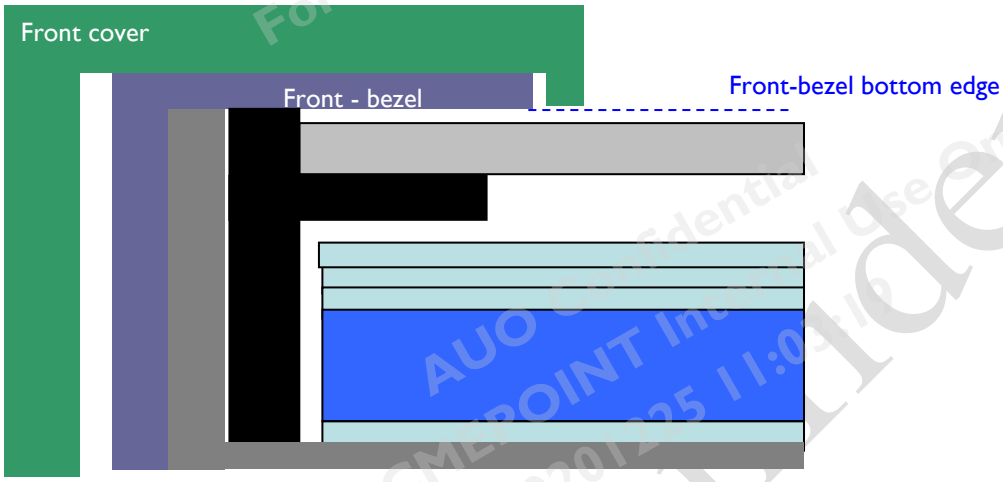

AUO Confidential
AUO Confidential
For ACMEPOINT Internal Use Only
20201225 11:03:19

For ACMEPOINT internal use only - provided by davidcwhsing on 2020/12/25