ALL WELL ELECTRONICS CO.,LTD

SPECIFICATION

CUSTOMER NAME: Qisda

PROJECT NAME: V2723/V2723G

PART NO. 2C.411V0.571

AW PART NO. AW-A1S140V-3

SUBMITTED DATE: 2023.06.06

Approved By	Checked By	Made By
Kevin	Weijun	Sunshine

Office: 3F. -1, NO. 29, Heping. Rd ., Bade City, Taoyuan County33465, Taiwan (R. O. C.)

TEL:+886-3-3669681 FAX:+886-3-3669682

Factory: NO.169Ximuxiang Rd,Huangqiao ,Xiangcheng,Suzhou City,Jiangsu Province,china

TEL:+86-512 -6922-1112 FAX:+86-512-6922-1113

http: //www.allwell.com.tw

版 本 管 控 表

版 次	變 更 內 容	時 間
A/1	初版發行	2023.05.18
A/2	RUBBER硬度由50度變更爲30度	2023.06.06

ALL WELL ELECTRONICS CO.,LTD

SPEAKER WITH AUDIO BOX	PN: AW-A1S140V-3

NO	Item	Specifications
01	**Dimension**	40.0 mm * 20.0 mm
02	**Cone Type**	Cloth + Paper
03	**Impedance**	4.0 ± 15% Ω at 2000Hz 1 V Input
04	**Rated Power**	Normal : 2.5 W Max: 3.0 W Sine Wave (Amplifier output power under normal power)
05	**Sound Pressure Level**	85 ± 3 dB at 1.0 W 0.5 M Average at 800, 1000, 1200, 1500Hz
06	**Resonance Freq**	Fb = 400 ± 20% Hz
07	**Freq Range**	Fb ～ 20KHz , Average SPL - 15 dB
08	**Distortion**	5 % Max. At 1000 Hz 1.0 W 0.5 M
09	**Total Weight**	26.3±0.5 g
10	**Buzz,Rattle,etc.**	Must be normal tested 3.16 volts sine wave.
11	**OperationTest**	Must be normal at sine wave and program source 2.5 W.
12	**Magnet**	11.0 mm * 2.0 mm N38
13	**Load test**	Pink noise with weighted filter 3.16 Volts 100 hours CNS4785 or compatible with JIS
14	**Humidity test**	Keep 100 hours at 90～95% , +40℃± 2℃ then removal back to normal temperature for 6 hour.

Date	Approved By	Checked By	Designed By
2023.03.31	Kevin	Weijun	Sunshine

NO	Item	Specifications
15	**Polarity**	When a positive DC Current is applied to the voice coil terminal marked + or red , the diaphram shall move forward.
16	**Operating Temp.**	-25℃ ～ 70℃.
17	**Storage Temp.**	−40℃ ～ 75℃.
18	**Low temp.test**	Keep 100 hours at -25℃± 2℃ and leave 1 hours in normal temperature and then check.
19	**High temp.Test**	Keep 100 hours at +70℃± 2℃ and leave 1 hours in normal temperature and then check.
20	**Environment test** **Temperature Cycle No operating**	Low temperature **:** -25℃± 2℃ ; High temperature : +70℃± 2℃ Cycle:1 hour each temperature by 4 temperature cycle of following digram Output Sound Pressure Level not to deviate by more than +3dB from pre—test measurement after placement under normal temperature Samples to be normal-temperature-cured for1 hour before test takes place. 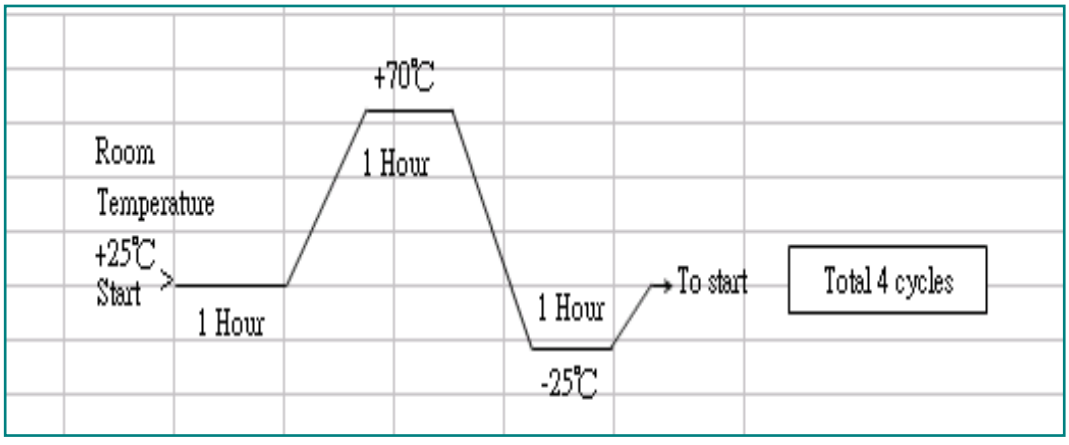

Date	Approved By	Checked By	Designed By
2023.03.31	Kevin	Weijun	Sunshine

ALL WELL ELECTRONICS CO.,LTD

Standard Control Curve

Frequency Curve

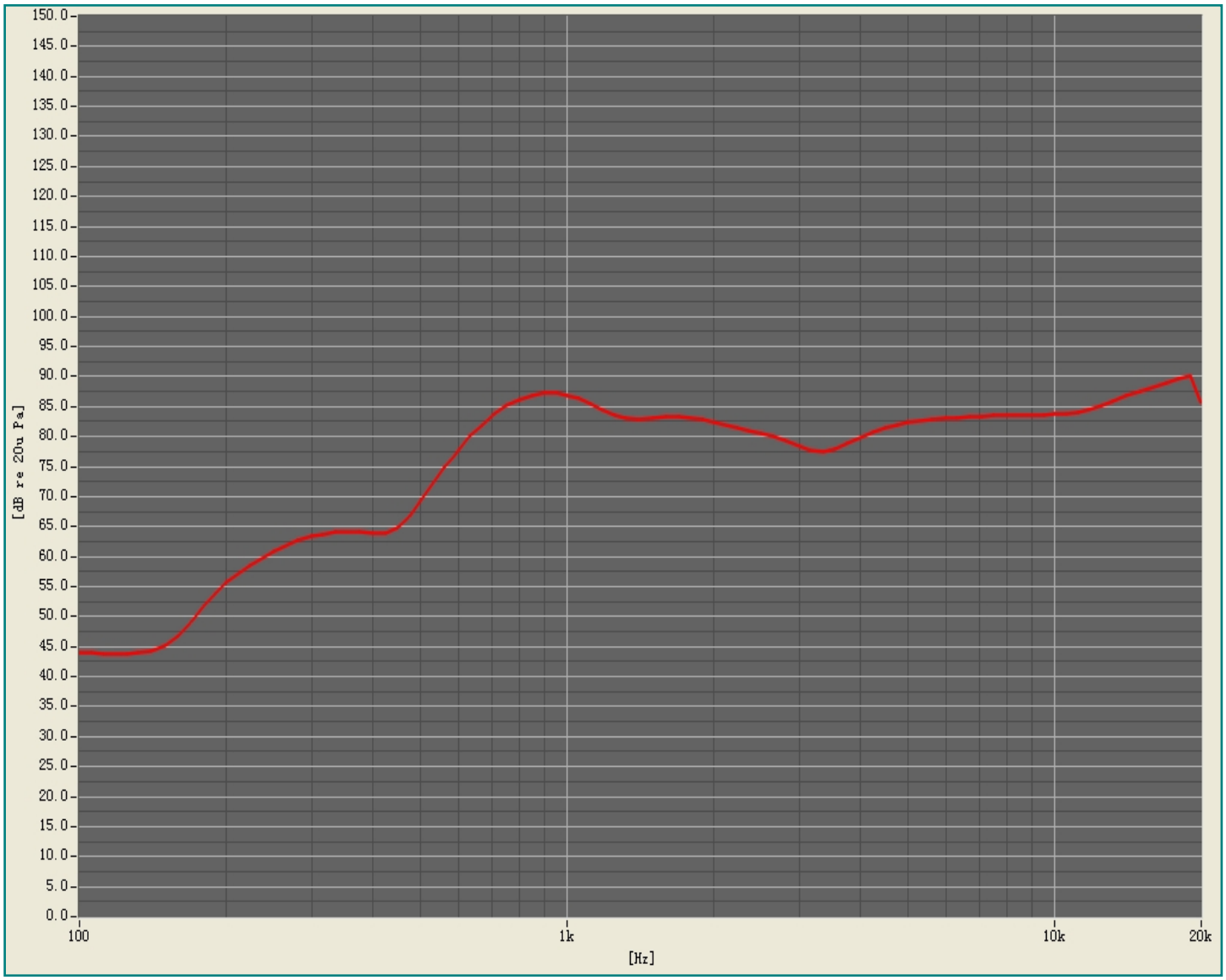

Product Name	**AW- A1S140V-3**

Test Condition:

1. No Voice Room: No Voice Room of Allwell	5. Revc(DC VC RES): 4.0 Ω
2. Test System: Soundcheck	6. Start Freq: 100 Hz
3. Test Distance: 1.0 W 0.5 M	7. Stop Freq: 20 KHz
4. Microphone Mode: SN(0160483)	8. Average SPL: 85 dB (800, 1000 , 1200, 1500Hz)

Date	Approved By	Checked By	Designed By
2023.03.31	Kevin	Weijun	Sunshine

ALL WELL ELECTRONICS CO.,LTD

Standard Control Curve

Impedance Curve

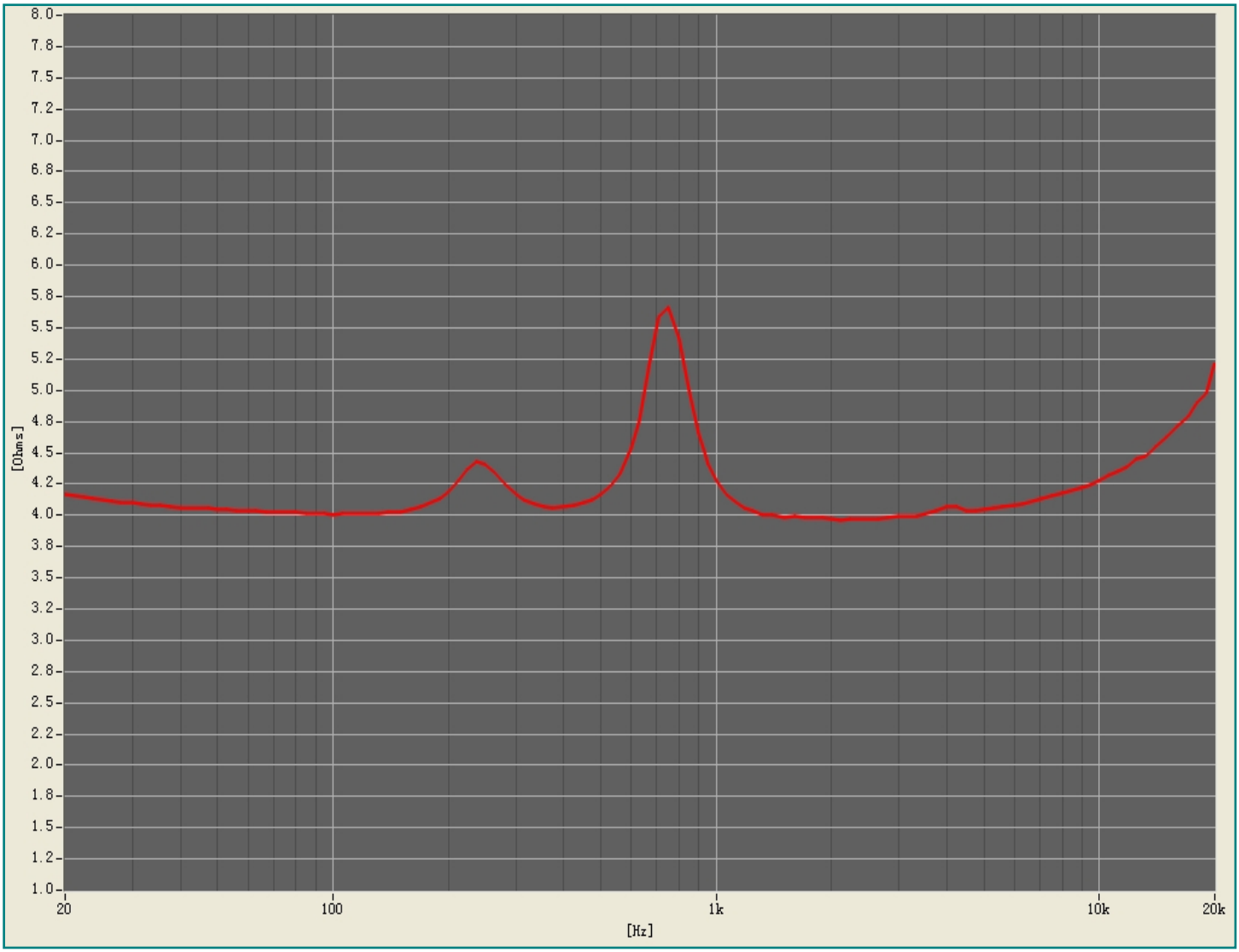

Product Name	**AW- A1S140V-3**

Test Condition:

1. No Voice Room: No Voice Room of Allwell
2. Test System: Soundcheck
3. Revc(DC VC RES): 4.0 Ω
4. Start Freq: 20 Hz
5. Stop Freq: 20 KHz

Date	Approved By	Checked By	Designed By
2023.03.31	Kevin	Weijun	Sunshine

ALL WELL ELECTRONICS CO.,LTD

Standard Control Curve

THD Curve

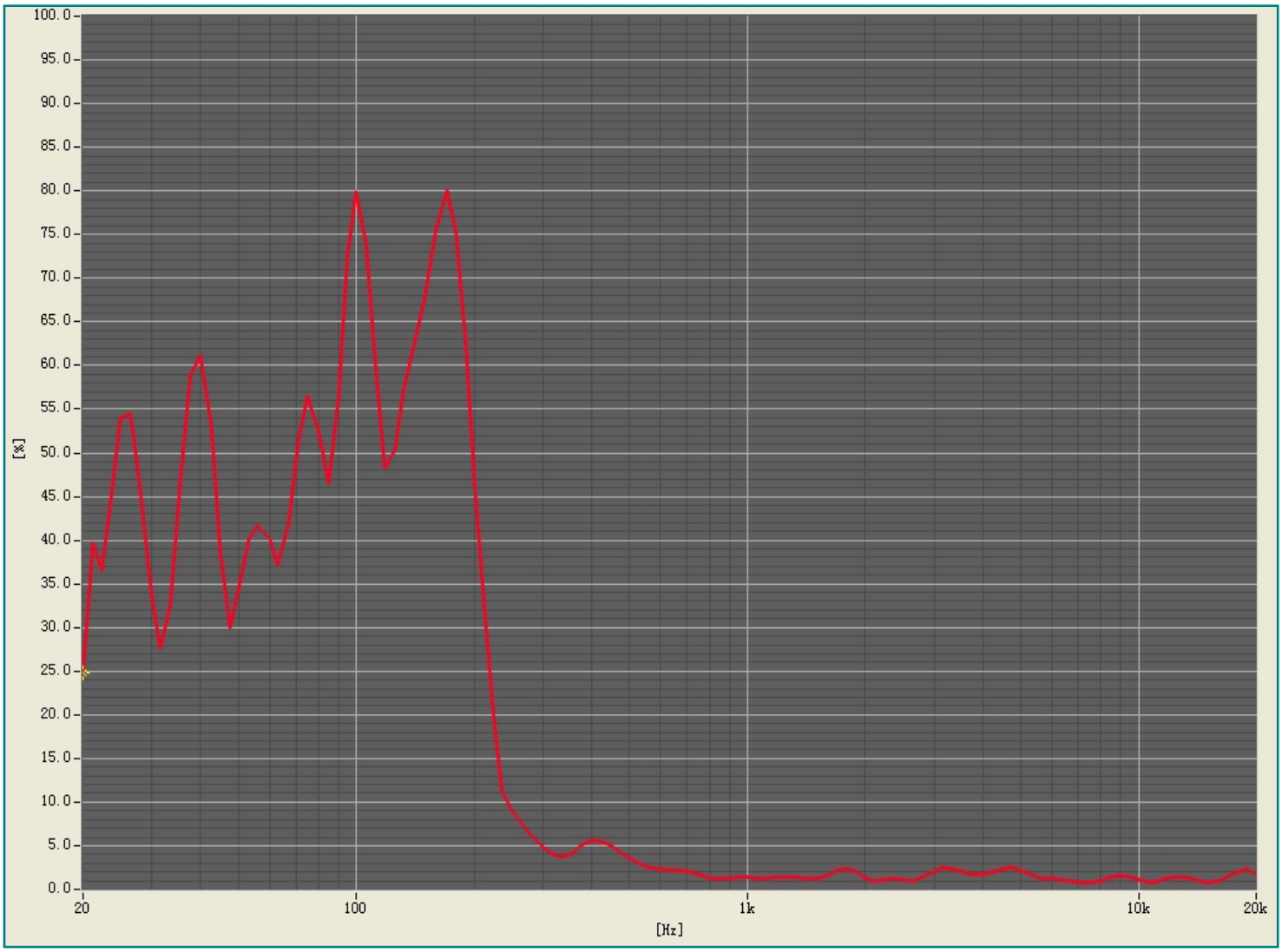

Product Name	**AW- A1S140V-3**

Test Condition:

1. No Voice Room: No Voice Room of Allwell
2. Test System: Soundcheck
3. Test Distance: 1.0 W 0.5 M
4. Start Freq: 20 Hz
5. Stop Freq: 20 KHz

Date	Approved By	Checked By	Designed By
2023.03.31	Kevin	Weijun	Sunshine

HF

L-Side

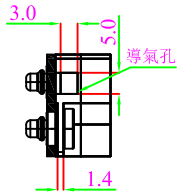

R-Side

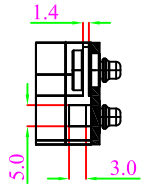

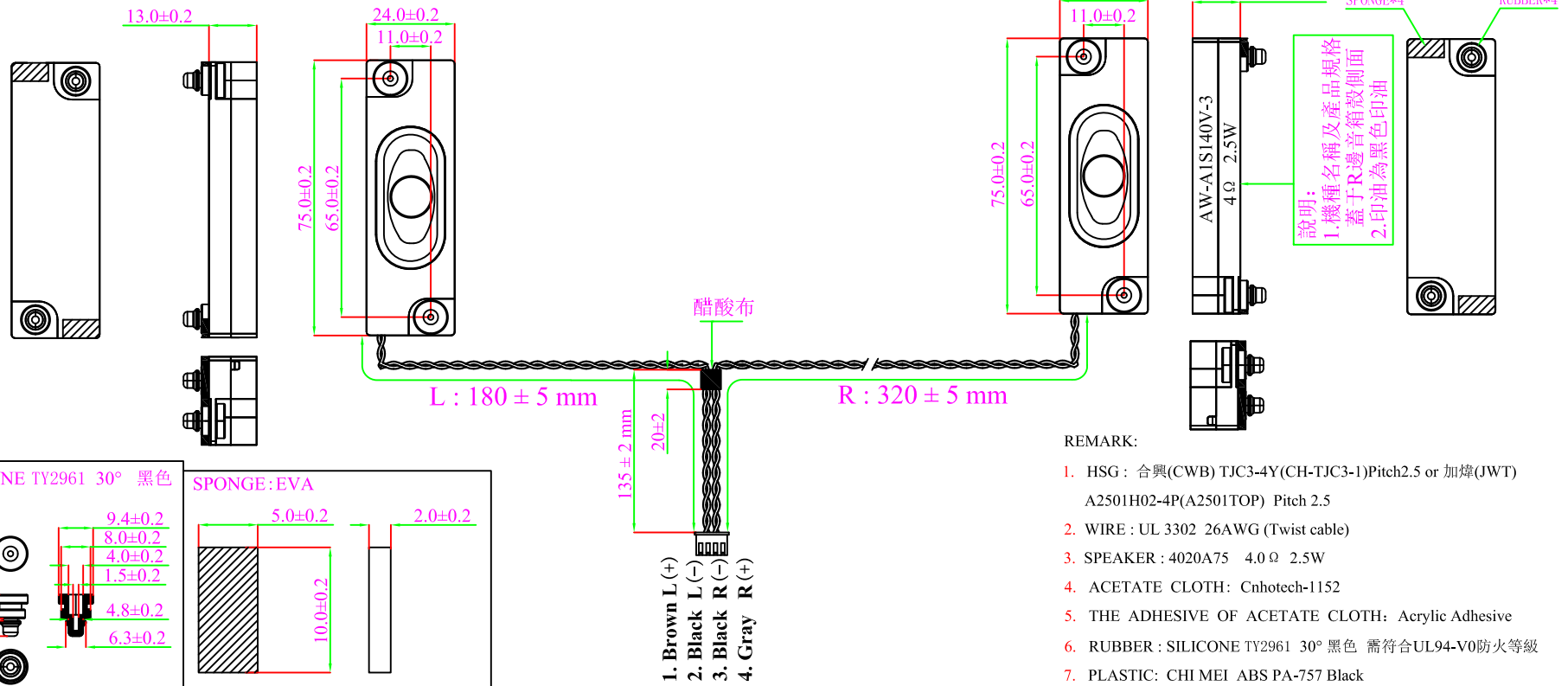

REMARK:

1. HSG : 合興(CWB) TJC3-4Y(CH-TJC3-1)Pitch2.5 or 加煒(JWT) A2501H02-4P(A2501TOP) Pitch 2.5
2. WIRE : UL 3302 26AWG (Twist cable)
3. SPEAKER : 4020A75 4.0Ω 2.5W
4. ACETATE CLOTH: Cnhotech-1152
5. THE ADHESIVE OF ACETATE CLOTH: Acrylic Adhesive
6. RUBBER : SILICONE TY2961 30° 黑色 需符合UL94-V0防火等級
7. PLASTIC: CHI MEI ABS PA-757 Black

ITEM	CONTENTS OF CHANGE	M/D/Y
A/2	RUBBER硬度由50°改为30°	2023.06.03
A/1	PLATES ISSUED IN EARIY	2023.05.18

TOL± RANGE	M1	M2	S1	S2	P1	P2	C	B
0-6	.05	0.1	.15	0.2	.05	0.1	0.5	.15
6-30	0.1	0.2	.15	.25	0.1	.15	1	.15
30-80	.15	.25	0.2	0.3	0.2	0.4	2	.25
80-180	.15	0.3	.25	.45	0.4	0.8	3	.25
180-315	0.2	0.5	0.4	0.6	0.6	1.2	3	0.3
315-800	0.3	0.8	0.7	1.1	0.8	1.5	4	0.5

PRODUCT NAME	SPEAKER	AllWell Electronics Co.,LTD			
DATE	Jun-03-2023	VER	A/2	AW PART NO	AW-A1S140V-3
UNIT	MM	SCALE	NONE	CUSTOMER NAME	Qisda
APPROVED	CHECKED	DRAWN	PROJECT NAME	V2723/V2723G	
孫術安	于家波	王学东	PART NO	2C.411V0.571	

包装盘材質：P E T
供　應　商：明　益

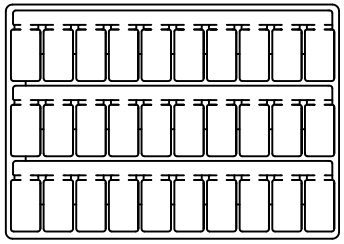

包装盘：505*355*25,30格喇叭位
每盘装30PCS产品/盤
包装盤料號：PP000076000

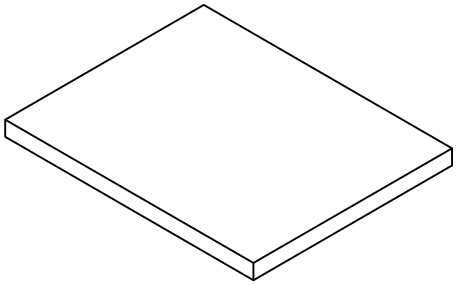

紙板：505*355三层纸板厚3 mm
紙板料號：CB000007000

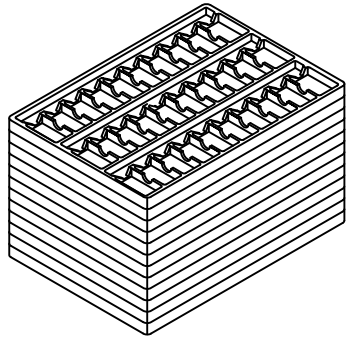

包装：每盘上面放一张纸板，
最下面放一张紙板(包装盘
12PCS/纸板13PCS)



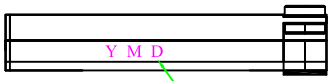

備注：需要加盖
1. 日期章（黑色油墨）Y(年)M(月)D(日)
2. 机种章（黑色油墨）
3. 線材擺放位置不可以觸碰到振膜

數量	重 量
1SET	26.3g
1箱淨重	9.5Kg
1箱毛重	11.5Kg

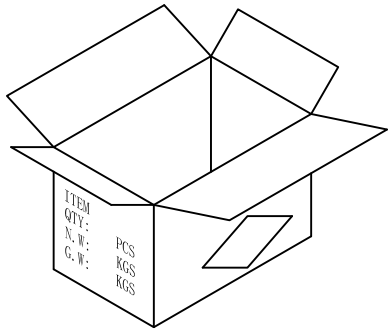

一箱放12盘（每箱装360PCS）
紙箱外尺寸:520*370*380
紙箱料號：CT000002000

ITEM	CONTENTS OF CHANGE	M/D/Y
A/1	PLATES ISSUED IN EARIY	2023.03.31

TOL± / RANGE	M1	M2	S1	S2	P1	P2	C	B
0-6	.05	0.1	.15	0.2	.05	0.1	0.5	.15
6-30	0.1	0.2	.15	.25	0.1	.15	1	.15
30-80	.15	.25	0.2	0.3	0.2	0.4	2	.25
80-180	.15	0.3	.25	.45	0.4	0.8	3	.25
180-315	0.2	0.5	0.4	0.6	0.6	1.2	3	0.3
315-800	0.3	0.8	0.7	1.1	0.8	1.5	4	0.5

PRODUCT NAME	包装圖	AllWell Electronics Co.,LTD			
DATE	Mar-31-2023	VER	A/1	AW PART NO	AW-A1S140V-3
UNIT	MM	SCALE	NONE	CUSTOMER NAME	Qisda
APPROVED	CHECKED	DRAWN	PROJECT NAME	V2723/V2723G	
Andy	kevin	Lizhongzhi	PART NO	2C.411V0.571	